AN4047

Crosstalk Analysis of the Quad Independent Channel HOTLink II™ Device

Author: Roy Liu

Associated Project: No

Associated Part Family: CYP15G0403DXB, CYV15G0104TRB, CYV15G0203TB, CYV15G0204TRB

Software Version: NA

Related Application Notes: AN1161

This application note shows that a quad independent channel HOTLink II™ device can operate all four channels simultaneously at different data rates reliably for large and small variations of frequencies across all channels.

Contents

Introduction 1
Crosstalk 2
  Jitter 2
Phase-Locked Loops 2
Jitter and Crosstalk Measurement Techniques 2
Transmitter Testing 3
  Transmitter Test Equipment Setup 3
  Transmitter Test Results 4
Receiver Testing 6
  Receiver Test Equipment Setup 6
  Receiver Test Results 6
Summary 10
Reference 10
Appendix A. Frequency Sweep of Aggressors 11
Worldwide Sales and Design Support 13

Introduction

The HOTLink II™ family of physical layer (PHY) devices is a point-to-point or point-to-multipoint communications building block that provides serialization, deserialization, optional 8B/10B encoding/decoding and framing functions. The quad independent channel device is a member of this frequency agile family that can support serial data rates between 195 and 1.5 Gbps per channel. Within this device, all four channels can simultaneously operate at different data rates and transmit different types of data. To provide this flexible feature, each channel has its own transmit and receive phase-locked loops (PLLs).

When channels operate at different frequencies within a device, a concern is that there may be a large amount of crosstalk between the channels that can affect the performance of the device.

This application note shows that the quad independent channel HOTLink II device operates reliably for large and small variations of frequencies across all channels. To show this, it first provides a brief description of crosstalk and how it causes jitter within the device (specifically, the PLL). Then, it describes the techniques for measuring crosstalk and the test equipment setup. Lastly, it describes the performance of the device's transmitter and receiver PLL's for the worst case crosstalk scenarios. While the majority of the tests are performed at video data rates, the results apply to any system that operates within the frequency range of HOTLink II devices.

The information in this application note shows the agility and reliability of this device for a wide range of applications.

Crosstalk

Crosstalk is the effect on a signal trace caused by cross-coupling with a neighboring trace. The trace that is being measured is referred to as the victim. The trace that is cross-coupled with the victim trace is referred to as the aggressor. A picture of this relationship is shown in Figure 1.

Figure 1. Victim and Aggressor Traces

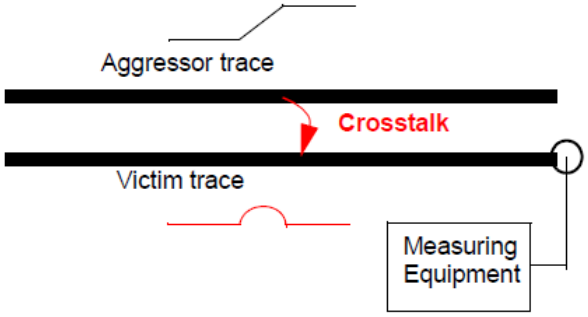

Crosstalk is dependent upon the edge rate of the aggressor signal; a faster edge induces more crosstalk. When the operating frequency of a HOTLink II device is increased, it increases its edge rate. Therefore, to test the worst case, the majority of the tests have the aggressor channels switching at high frequencies (Refer to Appendix. Frequency Sweep of Aggressors on page 10 for experimental verification).

Jitter

Crosstalk is a concern because it can be a major contributor to the amount of jitter present in a device. Simply stated, jitter is the deviation of an edge from its expected location. A large amount of jitter in a serial communications link may cause bit errors in the received serial bit stream.

Phase-Locked Loops

Within any HOTLink II device, there is a transmit PLL and a receive PLL. The quad independent channel HOTLink II device has four transmit and receive pairs, where each pair has its own reference clock. A concern is that when adjacent PLLs are switching at different frequencies, additional crosstalk may occur. This section briefly describes the structure of the transmit PLL and the tests that are performed to measure its performance. The receive PLL has similar frequency response characteristics and is tested similarly.

The transmit PLL is a clock multiplier unit (CMU). It receives an input clock (REFCLK) and outputs a bit clock that has ten times the frequency of REFCLK. A diagram of a transmit PLL is shown in Figure 2. The amount of jitter that propagates through a PLL depends on where the jitter entered the PLL. If it enters through the REFCLK input, only low-frequency components pass through because the PLL acts like a low-pass filter. However, if the jitter is injected inside the loop (by crosstalk between PLLs, for example), the system acts like a high-pass filter. Therefore, crosstalk between the PLLs can be a cause of jitter. To test the performance of the PLLs, three frequency variations between victim and aggressor REFCLKs will be performed: large frequency offsets (>100 MHz), small frequency offsets (< 1 MHz), and identical frequencies from different sources.

Figure 2. Transmit PLL

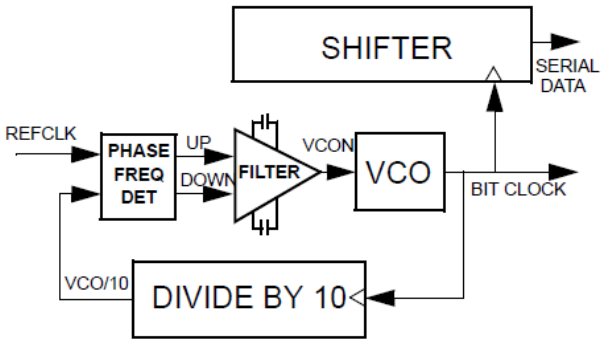

Jitter and Crosstalk Measurement Techniques

The tests performed for this app note measure the effect of crosstalk in two ways: jitter in the time domain and crosstalk in the frequency domain.

To measure jitter in the time domain, the eye diagram of the victim channel's output is observed on a wide-bandwidth oscilloscope. An eye diagram is formed by a superposition of waveforms. The phase of these waveforms with respect to one another is determined by the phase difference with the trigger signal. The amount of jitter is obtained by analyzing the histogram formed at the eye crossing (shown in Figure 3). The eye crossing is the point at which the positive edge and negative edge intersect. When the waveform intersects the histogram window, a "hit" is recorded in the histogram. The histogram formed in Figure 3 resembles a Gaussian distribution.

The two important values obtained from this measurement are the peak-to-peak jitter and the root mean square (RMS) value. The peak-to-peak jitter is the difference between the minimum and maximum time of hits in the histogram. This value is non-deterministic because of the nature of random jitter, but can provide helpful information when the test is performed for a long period of time. The RMS value (or standard deviation) converges to a stable value quickly. Assuming a Gaussian distribution, it can be proven that the peak-to-peak jitter is greater than 14 times the RMS value only once in 10^{12} bit periods.

Figure 3. Jitter Measurements at the Eye Crossing

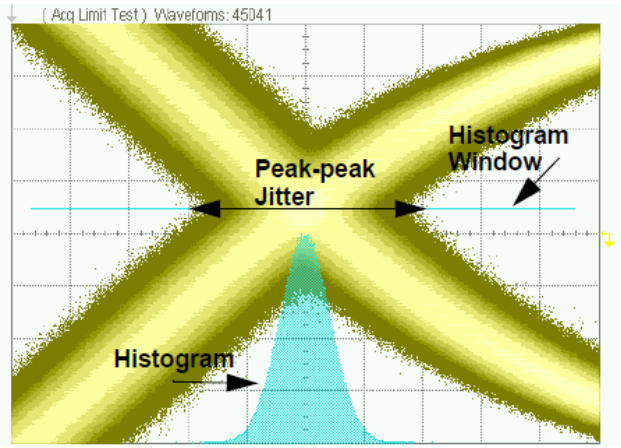

To measure crosstalk in the frequency domain, a high bandwidth spectrum analyzer will be used. The amplitude of the victim's fundamental frequency is compared with the amplitude of the aggressor's fundamental frequency. The fundamental frequency of a signal is the lowest natural frequency and is also called the first harmonic. For example, a perfect square wave 20-MHz clock has a fundamental frequency of 20 MHz. Furthermore, it is composed of a sum of sinusoids at multiples (or harmonics) of the fundamental frequency. The most prevalent harmonics of a square wave are the odd harmonics. The first (20 MHz, in this example), third (60 MHz), and fifth (100 MHz) harmonics contribute to most of the shape of the square wave. Thus, if the crosstalk components are significantly smaller than the fifth harmonic, their impact will be negligible.

There will be two tests for any configuration of data and frequency: measuring the victim channel's performance with no aggressors enabled and measuring its performance with three aggressors enabled. For all of the tests, the victim channel is channel A because it is located between two channels (B and D) on the device and the board (see Figure 4) and, therefore, incurs more crosstalk than the outer channels (B and C). Therefore, channels B, C, and D are aggressors on channel A.

The transmit input data is either BIST or static data. BIST data is pseudo-random and is generated by the encoder block inside the device. The static data is either a repeating D21.5 (1010101010) character or a repeating K28.7- (0011111000) character. As a serial bit stream, either sequence looks like a square wave, where the D21.5 sequence has a frequency that is five times higher than the K28.7 sequence. In fact, the K28.7 bit stream has the same frequency as the reference clock. In the frequency domain, an ideal square wave has discrete peaks at odd harmonics of the fundamental frequency. These peaks have large amplitudes since energy is concentrated at narrow frequency bands. Crosstalk induced by these sequences will be more visible in the frequency domain than broadband data. Furthermore, it is easier to observe the crosstalk when the victim is transmitting D21.5s or K28.7s. Because there are very small frequency components between these peaks, the impact of an aggressor switching at a different frequency can be more easily seen on the spectrum analyzer.

The BIST data tests will be run for a longer period of time (2 hours) than the static data tests (30 minutes) since the static data sequences repeat every character compared to the BIST data sequence which repeats every 511 characters. The D21.5 character will be used for the high operating frequencies to yield the maximum frequency on the serial outputs. Similarly, the K28.7 character will be used for the low operating frequencies to yield the minimum frequency on the serial outputs.

Transmitter Testing

Transmitter Test Equipment Setup

Figure 4 shows the connections of the equipment with the CYV15G0404DXB evaluation board [1] for the transmitter tests. The reference clock for each channel (REFCLKx) will be supplied by a different Agilent 8133A Pulse Generator. The RMS jitter from these generators is less than 5 ps (1 ps typical). The measurements performed on the transmit side will be taken at the serial output SEROUTA+. These measurements are observed on an Agilent 86100A wide-bandwidth oscilloscope and an Agilent E4407B spectrum analyzer.

Both primary and secondary output drivers are enabled in each channel to maximize the potential for coupling between channels. All aggressor primary serial outputs and SEROUTA- are looped back to their respective inputs with short cables. The secondary outputs are left unconnected. When all three aggressor transmit channels are enabled, their receivers are also enabled and receive the transmitted data. This is the worst case situation where all PLLs are active and possibly cross-coupling with other PLLs.

[1] The CYV15G0404DXB evaluation board is obsolete. These results apply to any independent channel HOTLink II device.

Figure 4. Transmitter Test Equipment Setup

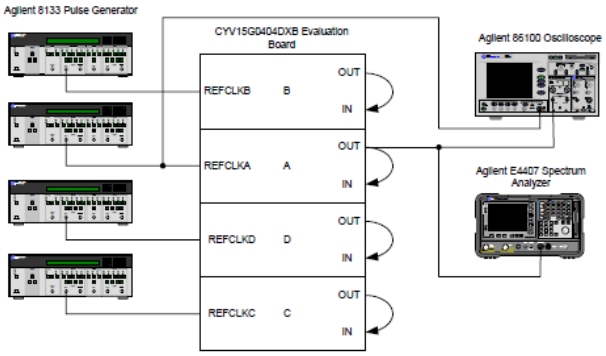

Transmitter Test Results

Test 1. Victim and Aggressors both Transmitting BIST at High Frequencies

- Victim: Channel A at 148.5 MHz
- Aggressors: Channel B at 148.35 MHz, C at 148.5 MHz, D at 148.35 MHz

This test reflects a real world system where all four channels are transmitting data at similar frequencies. Note that channels A and C have slightly different frequencies because they have two independent REFCLK sources. See Table 1 and Figure 5 for the jitter results. The peak-peak jitter increased by only 2.4 ps, a very small amount. Similarly, the standard deviation increased by only 0.72 ps.

Table 1. Test 1 Results

	Jitter	
	Peak-Peak (ps)	Std. Dev. (ps)
No Aggressors	114.3	13.47
All Aggressors	116.7	14.19

Figure 5. Eye Diagrams for Test 1 (BIST): No Aggressors (Top) and Three Aggressors (Bottom)

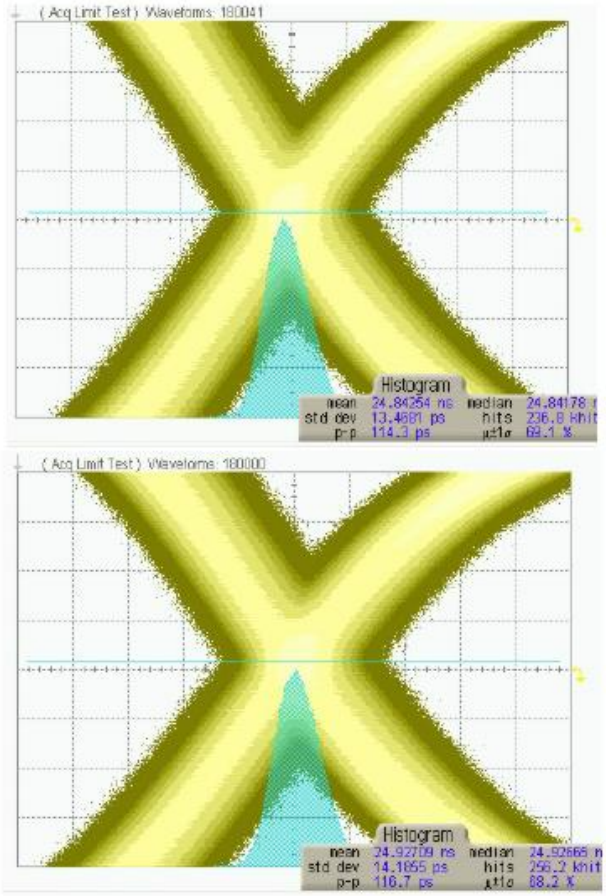

Test 2. Victim Transmitting Low-Frequency K28.7s and Aggressors Transmitting High-Frequency D21.5s

- Victim: Channel A at 27 MHz
- Aggressors: Channel B at 148.5 MHz, C at 148.5 MHz, D at 148.35 MHz

This test measures the effect of large differences in operating frequency between the victim and adjacent channels. Transmitting K28.7s and D21.5s provide a more descriptive spectral plot.

See Table 2 and Figure 6 for the jitter results. The resulting waveform does not form an eye because the character repeats every reference clock cycle (the trigger). The histogram window was set to the 50% amplitude swing level of the signal. For this test, the peak-peak jitter increased by 7.8 ps and the standard deviation increased by 0.29 ps.

Table 2. Test 2 Results

	Jitter	
	Peak-Peak (ps)	**Std. Dev. (ps)**
No Aggressors	112.0	12.74
All Aggressors	119.8	13.03

See Figure 7 for the spectrum analyzer results. The two views are spectral plots of channel A with all aggressors enabled. To display the smaller components, the amplitude is on a logarithmic scale (7-dB/ division). The top view shows all spectral components from 0 to 1 GHz. The fundamental frequency is the first large peak located at 27 MHz. The bottom view is zoomed in on the fifth harmonic (135 MHz) and the largest frequency component (148.4 MHz) due to crosstalk. This crosstalk component is 40 dB (100x) smaller than the fundamental frequency and 28 dB (25x) smaller than the fifth harmonic.

Figure 6. Eye Diagrams for Test 2 (K28.7): No Aggressors (Top) and Three Aggressors (Bottom)

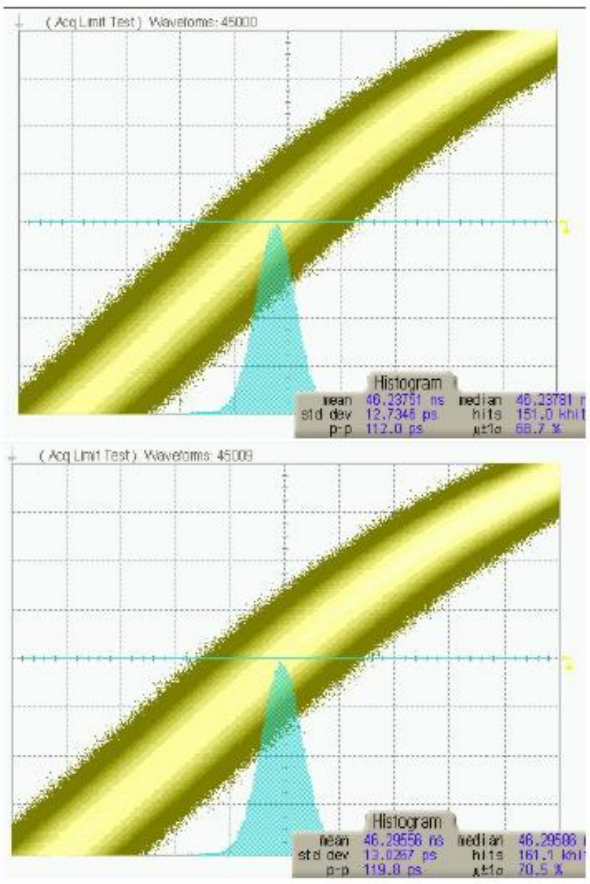

Figure 7. Spectral Plot of Test 2 (K28.7) with Three Aggressors

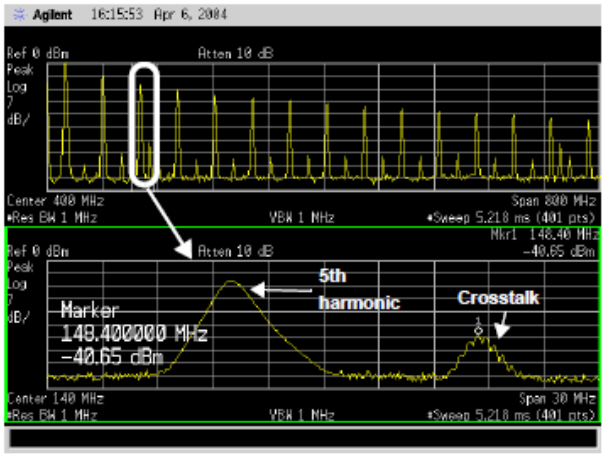

Test 3. Victim and Aggressors both Transmitting D21.5s at High Frequencies

- Victim: Channel A at 148.5 MHz
- Aggressors: Channel B at 148.35 MHz, C at 150 MHz, D at 145 MHz

This test measures the effect of adjacent channels switching at high frequencies. Transmitting D21.5s provide a more descriptive spectral plot.

See Table 3 and Figure 8 for the jitter results. The peak-peak jitter increased by 2.3 ps and the standard deviation increased by 0.36 ps.

See Figure 9 for the spectrum analyzer results. The lower plot is a zoomed in view of the fundamental frequency of the victim (148.5 x 5 = 762.5 MHz) and the largest frequency component of the aggressors (Channel D: 145 × 5 = 725 MHz). The aggressor's frequency component is 42 dB (125 x) smaller than the victim's fundamental frequency.

Table 3. Test 3 Results

	Jitter	
	Peak-Peak (ps)	**Std. Dev. (ps)**
No Aggressors	74.7	8.60
All Aggressors	77.0	8.96

Figure 8. Eye Diagrams for Test 3 (D21.5): No Aggressors (Top) and Three Aggressors (Bottom)

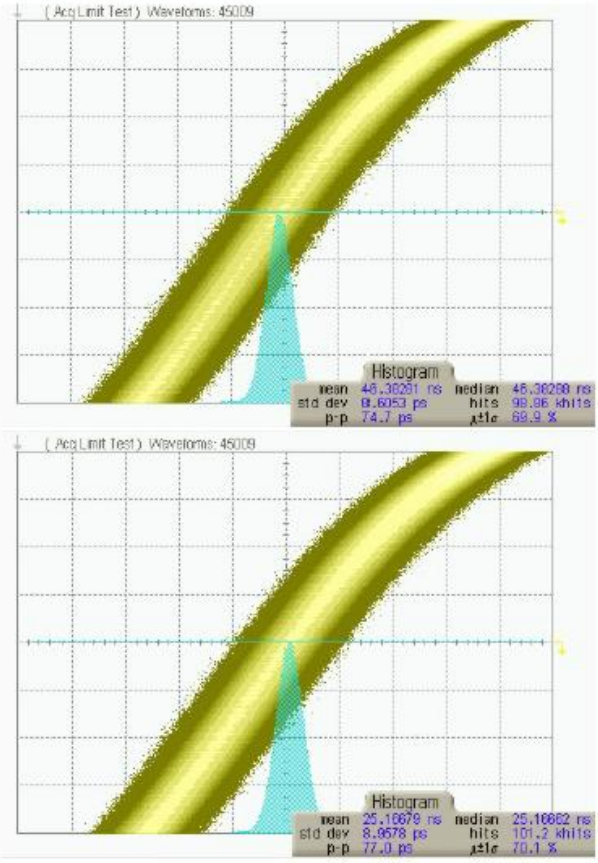

Figure 9. Spectral Plot of Test 3 (D21.5) with Three Aggressors

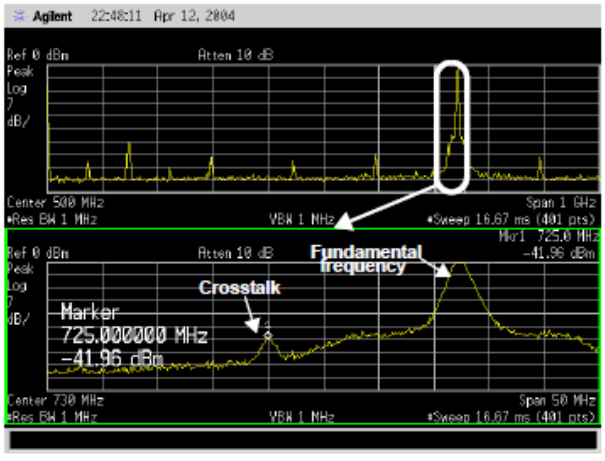

Receiver Testing

Receiver Test Equipment Setup

Figure 10 shows the connections of the equipment with the CYV15G0404DXB evaluation board for the receiver tests. The input to the receive PLL is the serial data stream generated by the transmitter of the same channel. This reflects the worst case situation where both PLLs of all channels are running at different frequencies. To maximize the potential for cross-coupling, both output drivers are enabled on every channel. However, only the primary outputs are connected to the inputs. The secondary outputs are left unconnected.

The same type of data is transmitted as in the transmitter tests. The performance of the receiver is determined by measuring the output of the receive clock RXCLKA+. The receive clock will be the recovered byte clock from the PLL (RXCKSELA= '0'). The measurements will be observed on an Agilent 86100A wide-bandwidth oscilloscope and an Agilent E4407B spectrum analyzer.

Figure 10. Receiver Test Equipment Setup

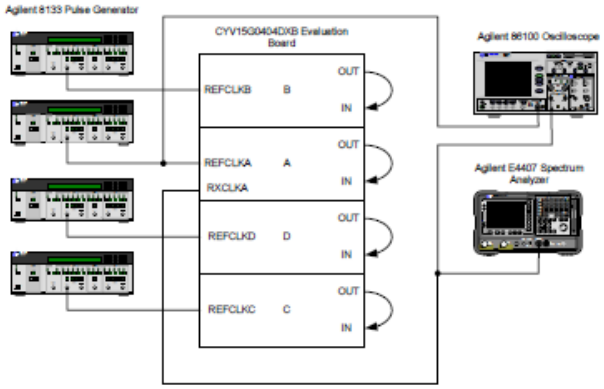

Receiver Test Results

To form an eye diagram, the receive clock is set to a half-rate clock (RXRATEA = 1). For each trigger edge, the receive clock alternates between a positive edge and a negative edge.

Test 4. Victim and Aggressors both Transmitting BIST at High Frequencies

- Victim: Channel A at 148.5 MHz
- Aggressors: Channel B at 148.35 MHz, C at 148.5MHz, D at 148.35 MHz

This test reflects a real world system where all four channels are receiving data at similar frequencies. Note that channels A and C have slightly different frequencies because they have two independent REFCLK sources.

See Table 4 and Figure 11 for the jitter results. The peak-peak jitter increased by only 5.5 ps, a very small amount. Similarly, the standard deviation increased by only 0.96 ps.

Table 4. Test 4 Results

	Jitter	
	Peak-Peak (ps)	**Std. Dev. (ps)**
No Aggressors	115.1	12.00
All Aggressors	120.6	12.96

Figure 11. Eye Diagrams for Test 4 (BIST): No Aggressors (Top) and Three Aggressors (Bottom)

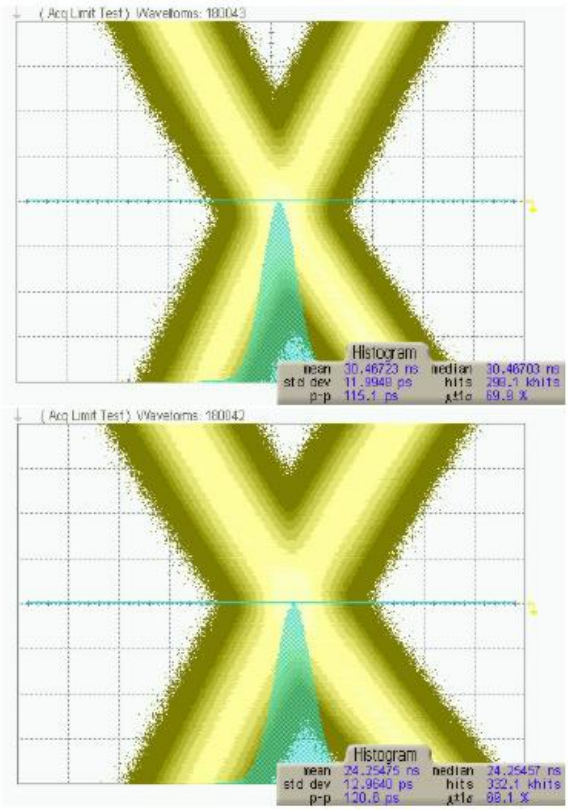

Test 5. Victim Transmitting Low-Frequency K28.7s and Aggressors Transmitting High-Frequency D21.5s

- Victim: Channel A at 27 MHz
- Aggressors: Channel B at 148.5 MHz, C at 148.5 MHz, D at 148.35 MHz

This test measures the effect of large differences in operating frequency between the victim and adjacent channels. Transmitting K28.7's and D21.5's will provide a more descriptive spectral plot.

See Table 5 and Figure 12 for the jitter results. The peak-peak jitter increased by 8.5 ps and the standard deviation increased by only 0.33 ps.

Table 5. Test 5 Results

	Jitter	
	Peak-Peak (ps)	**Std. Dev. (ps)**
No Aggressors	162.6	19.44
All Aggressors	171.1	19.77

Figure 12. Eye Diagrams for Test 5 (K28.7): No Aggressors (Top) and Three Aggressors (Bottom)

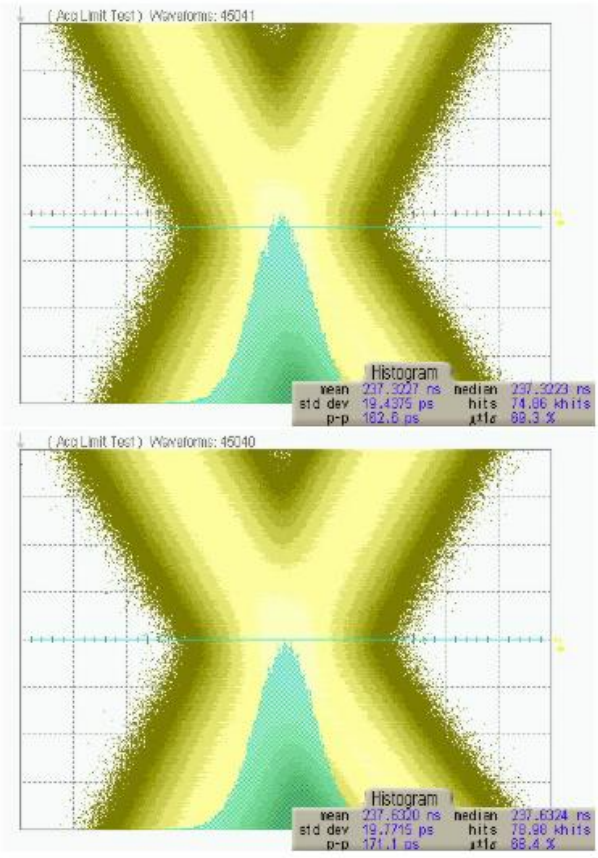

See Figure 13 for the spectrum analyzer results. The two views are spectral plots of channel A with all aggressors enabled. The top view shows all spectral components from 0 to 155 MHz. The bottom view is zoomed in on the 11th harmonic (148.5 MHz) and the largest frequency component (145 MHz) due to crosstalk. This crosstalk component is over 33 dB (45x) smaller than the fundamental frequency and 20 dB (10x) smaller than the 11th harmonic.

Figure 13. Spectral Plot of Test 5 (K28.7) with Three Aggressors

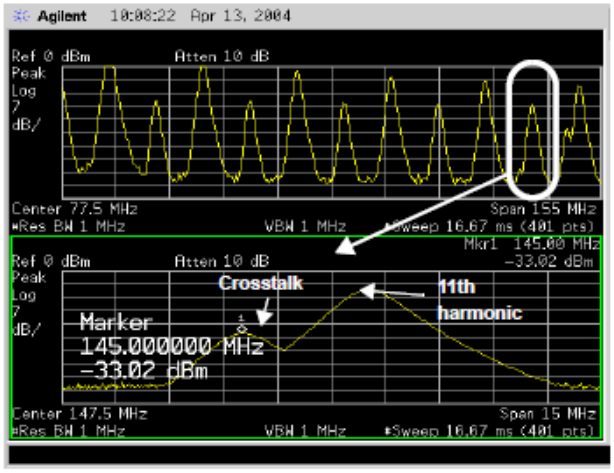

Test 6. Victim and Aggressors both Transmitting D21.5s at High Frequencies

- Victim: Channel A at 148.5 MHz
- Aggressors: Channel B at 148.35 MHz, C at 150 MHz, D at 145 MHz

This test measures the effect of adjacent channels switching at high frequencies. Transmitting D21.5s provide a more descriptive spectral plot.

See Table 6 and Figure 14 for the jitter results. The peak-peak jitter increased by 7.8 ps and the standard deviation increased by only 0.09 ps.

See Figure 15 and Figure 16 on page 9 for the spectrum analyzer results. In Figure 15, the lower plot is a zoomed in view of the sixth harmonic of the victim (74.25 x 6 = 445.5 MHz) and the second largest frequency component of the aggressors (Channel D: 145 MHz). The aggressor's frequency component is 43 dB (141x) smaller than the victim's fundamental frequency and 30 dB (32x) smaller than the victim's fifth harmonic. In Figure 16 on page 9, the lower plot is a zoomed in view of the eighteenth harmonic (18 x 74.25 = 1336.5 MHz) and the largest frequency component due to crosstalk (1.305 GHz). The aggressor's frequency component is 38 dB (80x) smaller than the victim's fundamental frequency and the fifth harmonic. Also, it is 10 dB (3x) smaller than the victim's eighteenth harmonic.

Table 6. Test 6 Results

	Jitter	
	Peak-Peak (ps)	**Std. Dev. (ps)**
No Aggressors	94.9	11.78
All Aggressors	102.7	11.87

Figure 14. Eye Diagrams for Test 6 (D21.5): No Aggressors (Top) and Three Aggressors (Bottom)

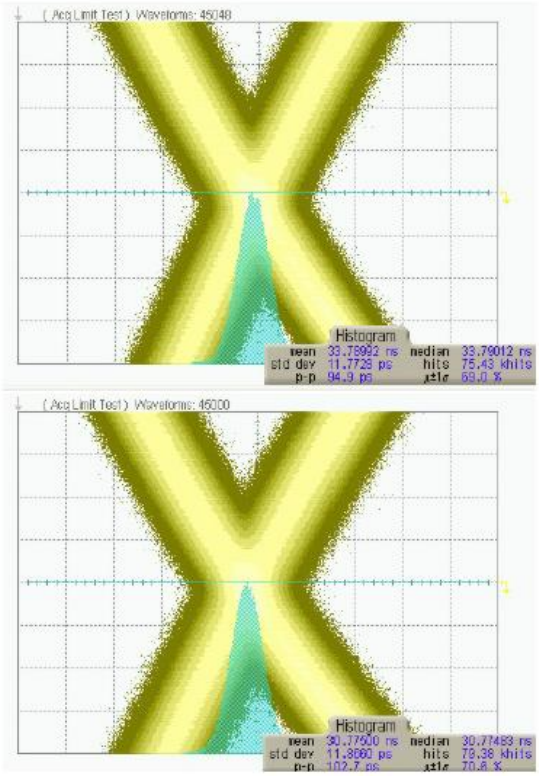

Figure 15. Spectral Plot of Test 6 (D21.5) with Three Aggressors–Victim's Sixth Harmonic

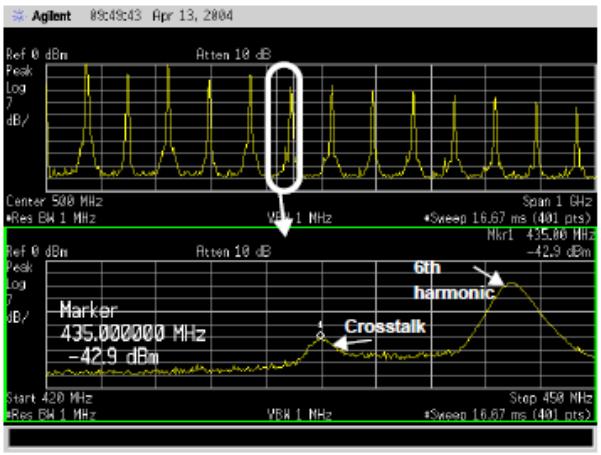

Figure 16. Spectral Plot of Test 6 (D21.5) with Three Aggressors–Victim's Eighteenth Harmonic

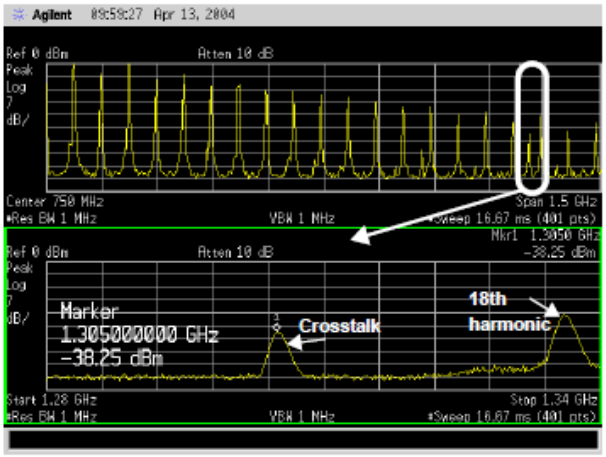

Summary

For the transmitter, the effect of crosstalk was very small. The RMS jitter increased by less than 0.8 ps and the peak-peak jitter increased by less than 8 ps for all three tests. Furthermore, the spectrum analyzer plots showed that the largest crosstalk components were at least 100 times smaller than the fundamental frequency and over 40 times smaller than the fifth harmonic. Thus, the impact of crosstalk is negligible on the transmit side.

The receiver tests yielded similar results: the RMS jitter increased by less than 1.0 ps and the peak-to-peak jitter increased by less than 8 ps for all three tests. Also, the spectrum analyzer plots showed that the largest crosstalk components were at least 45 times smaller than the fundamental frequency and at least 40 times smaller than the fifth harmonic. Thus, the impact of crosstalk is negligible on the receive side too.

The quad independent channel HOTLink II device can simultaneously transmit serial data at different frequencies across all four channels without experiencing deleteriorating effects due to crosstalk.

Reference

Measuring Crosstalk in LVDS Systems. Cole, Elliot. Texas Instruments. January 2000.

About the Author

Name: Roy Liu.

Title: Applications Engineer

Appendix A. Frequency Sweep of Aggressors

This section proves that the effect of crosstalk increases as the aggressor's edge rate increases. As described in Crosstalk on page 1, the HOTLink II device increases its edge rate as its operating frequency increases. Thus, the effect of crosstalk should increase with operating frequency.

The test equipment setup is the same as the transmitter test setup, except only the spectrum analyzer is used to measure the serial output. For all of the tests, the victim channel (Channel A) operates a constant frequency of 150 MHz. Conversely, the aggressor channels sweep across the complete operating range (19.5 MHz to 150 MHz) of the device. The Agilent E4407B has a Max Hold function that maintains the highest recorded amplitude for each frequency point. All channels will transmit D21.5 characters.

Figure 17 shows the spectral plot of channel A with no aggressors. The fundamental frequency is at 750 MHz and has an amplitude of approximately 0 dB.

Figure 17. Channel A with No Aggressors

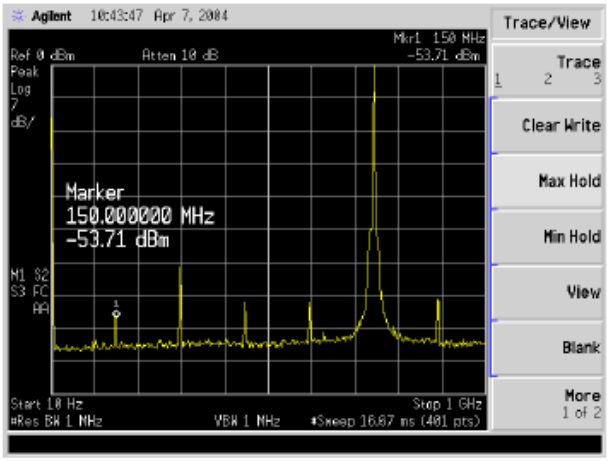

For the following measurements, as the aggressor's frequency is swept, the spectrum analyzer will be saving the highest value recorded at each frequency. Figure 18 shows the spectral plot of channel A with the aggressor channel B swept across the whole operating frequency range. The effect of crosstalk can be seen at the lower frequency range (< 150 MHz). While these values are less than 1/100th the size of the fundamental frequency, it is clear that the amplitude increases with frequency from 20 to 150 MHz. The same can be seen for the other channels (Channel C in Figure 19 and Channel D in Figure 20). It is important to note that the amplitudes of higher frequency spectral components (for example, the frequencies at which the serial data switches) are even smaller than –45 dB.

Figure 18. Channel A with Aggressor Channel B Sweeping Across the Operating Range

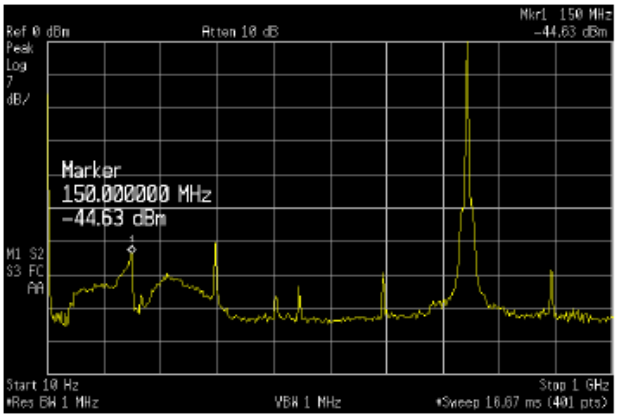

Figure 19. Channel A with Aggressor Channel C Sweeping Across the Operating Range

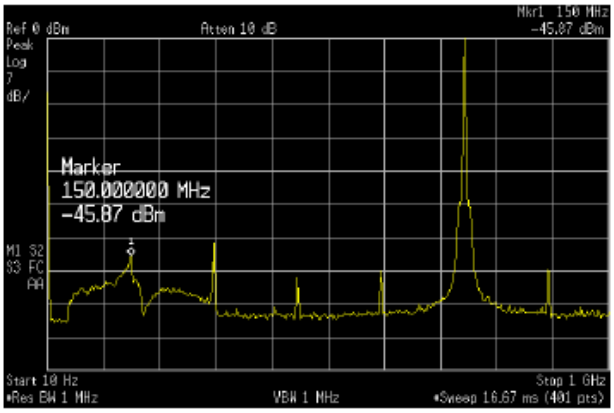

Figure 20. Channel A with Aggressor Channel D Sweeping Across the Operating Range

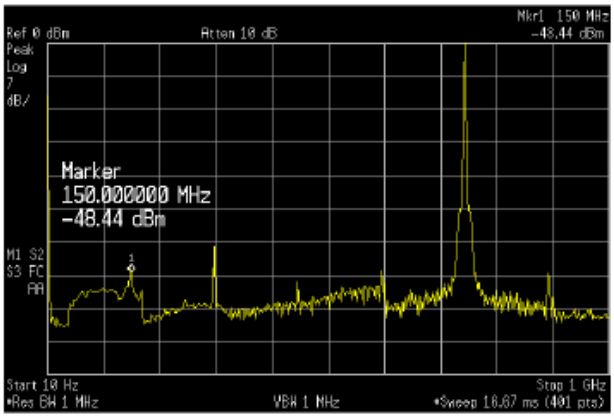

Document History

Document Title: Crosstalk Analysis of the Quad Independent Channel HOTLink II™ Device - AN4047

Document Number: 001-14943

Revision	ECN	Orig. of Change	Submission Date	Description of Change
**	1000340	CGX	04/20/2007	Existing Application Note in the web - Added Spec No. and new disclaimer and also updated the copyright date
*A	1785606	CGX	11/29/2007	Google search requirement update. There were no technical updates to these notes. Template update.
*B	3135179	SAAC	01/12/2011	Added associated part numbers and associated application note on page 1. Added Note 1 on page 3.
*C	4268365	YLIU	01/31/2014	Updated in new template. Completing Sunset Review.

Worldwide Sales and Design Support

Cypress maintains a worldwide network of offices, solution centers, manufacturer's representatives, and distributors. To find the office closest to you, visit us at Cypress Locations.

Products

Automotive	cypress.com/go/automotive
Clocks & Buffers	cypress.com/go/clocks
Interface	cypress.com/go/interface
Lighting & Power Control	cypress.com/go/powerpsoc cypress.com/go/plc
Memory	cypress.com/go/memory
PSoC	cypress.com/go/psoc
Touch Sensing	cypress.com/go/touch
USB Controllers	cypress.com/go/usb
Wireless/RF	cypress.com/go/wireless

PSoC® Solutions

psoc.cypress.com/solutions

PSoC 1 | PSoC 3 | PSoC 4 | PSoC 5LP

Cypress Developer Community

Community | Forums | Blogs | Video | Training

Technical Support

cypress.com/go/support

West Bridge is a registered trademark of Cypress Semiconductor Corp. Antioch is a trademark of Cypress Semiconductor Corp. All other trademarks or registered trademarks referenced herein are the property of their respective owners.

Cypress Semiconductor
198 Champion Court
San Jose, CA 95134-1709

Phone : 408-943-2600
Fax : 408-943-4730
Website : www.cypress.com

© Cypress Semiconductor Corporation, 2007-2014. The information contained herein is subject to change without notice. Cypress Semiconductor Corporation assumes no responsibility for the use of any circuitry other than circuitry embodied in a Cypress product. Nor does it convey or imply any license under patent or other rights. Cypress products are not warranted nor intended to be used for medical, life support, life saving, critical control or safety applications, unless pursuant to an express written agreement with Cypress. Furthermore, Cypress does not authorize its products for use as critical components in life-support systems where a malfunction or failure may reasonably be expected to result in significant injury to the user. The inclusion of Cypress products in life-support systems application implies that the manufacturer assumes all risk of such use and in doing so indemnifies Cypress against all charges.
This Source Code (software and/or firmware) is owned by Cypress Semiconductor Corporation (Cypress) and is protected by and subject to worldwide patent protection (United States and foreign), United States copyright laws and international treaty provisions. Cypress hereby grants to licensee a personal, non-exclusive, non-transferable license to copy, use, modify, create derivative works of, and compile the Cypress Source Code and derivative works for the sole purpose of creating custom software and or firmware in support of licensee product to be used only in conjunction with a Cypress integrated circuit as specified in the applicable agreement. Any reproduction, modification, translation, compilation, or representation of this Source Code except as specified above is prohibited without the express written permission of Cypress.
Disclaimer: CYPRESS MAKES NO WARRANTY OF ANY KIND, EXPRESS OR IMPLIED, WITH REGARD TO THIS MATERIAL, INCLUDING, BUT NOT LIMITED TO, THE IMPLIED WARRANTIES OF MERCHANTABILITY AND FITNESS FOR A PARTICULAR PURPOSE. Cypress reserves the right to make changes without further notice to the materials described herein. Cypress does not assume any liability arising out of the application or use of any product or circuit described herein. Cypress does not authorize its products for use as critical components in life-support systems where a malfunction or failure may reasonably be expected to result in significant injury to the user. The inclusion of Cypress' product in a life-support systems application implies that the manufacturer assumes all risk of such use and in doing so indemnifies Cypress against all charges.
Use may be limited by and subject to the applicable Cypress software license agreement.