AIROC™ CYW89829 MCU low-power modes and power reduction techniques

About this document

Scope and purpose

This document describes how to use the various power modes in AIROC™ CYW89829 Bluetooth® LE system on chip (SoC) for optimizing the power consumption based on the use cases. Major topics discussed in this application note include the power measurement procedure, low-power modes, tips for power saving, power management techniques, and sample applications available for CYW89829.

Intended audience

This application note is intended for users who are interested in minimizing the average power consumption of their respective Bluetooth® applications.

Table of contents

About this document **1**
Table of contents **2**
1 Introduction **4**
1.1 Infineon resources 4
1.1.1 ModusToolbox™ 4
1.1.2 Development kits 4
2 CYW89829 power architecture **5**
2.1 Low-power system features 5
2.2 Clocks 5
2.3 CYW89829 power modes 6
2.4 System power mode transition of MCU and Bluetooth® subsystems 7
2.5 System power modes 8
2.5.1 System power mode selection in Device Configurator 10
3 Power management by software **12**
3.1 Boot 12
3.1.1 Cold boot 12
3.1.2 Warm boot 12
3.2 System Power Management (SysPm) library 13
3.2.1 PDL 13
3.2.1.1 Callback modes 14
3.2.2 HAL 14
3.3 Implementing low-power mode transitions 14
3.3.1 Implementing low-power modes on a bare metal application 14
3.3.1.1 Steps to perform before entering Deep Sleep RAM mode 15
3.3.1.2 Steps to perform after waking up from Deep Sleep RAM mode 15
3.3.2 Implementing low-power modes on FreeRTOS 17
3.3.2.1 Steps to perform before entering Deep Sleep RAM 17
3.3.2.2 Steps to perform after waking up from Deep Sleep RAM 17
3.4 Register callback functions using PDL 17
3.5 Implement custom callback functions using PDL 19
3.6 Tips for active power saving 21
3.6.1 Gate current paths using CYW89829 21
3.6.2 GPIO configuration 21
3.6.3 Clock gating 22
3.6.4 Copy/move data using DMA 22
3.6.5 ADC subsystem 22
3.6.6 Periodic wakeup timers 22
3.6.7 SRAM 23
3.6.8 SCB 24
3.6.9 TCPWM 25
3.6.10 RTOS tickless mode 26
4 Advanced power management **27**
4.1 Power control architecture 27
4.1.1 Power states supported by each PPU 27
4.2 Regulator topologies 28
4.3 Core voltage selection 28
4.3.1 Linear regulator and buck regulator 28

Table of contents

4.3.2 Assignment of regulators 28
4.3.3 Regulator operations 29
4.4 Backup power domain 29
4.5 Backup data registers 30
5 Low-power code examples 31
5.1 CE239178 – AIROC™ CYW20829 switching power modes 31
5.2 CE239179 – AIROC™ CYW20829 FreeRTOS switching power modes 31
5.3 CE237278 – HAL RTC alarm periodic wakeup 32
6 Power measurement 33
6.1 Hardware 33
6.2 Average current consumption 34
6.2.1 Sleep mode 35
6.2.2 Deep Sleep mode 36
6.2.3 Deep Sleep RAM mode 38
6.2.4 Hibernate mode 40
6.3 Measured current readings for various power modes 40
References 41
Revision history 42
Disclaimer 43

1 Introduction

Infineon's AIROC™ CYW89829 is a high-performance, ultra-low-power and "Secure" MCU + Bluetooth® LE platform, purpose-built for industrial and automotive applications. It combines a high-performance microcontroller with Bluetooth® LE (5.4) connectivity, high-performance analog-to-digital conversion input, I2S, CAN, LIN for automotive use cases and other standard communication and timing peripherals. CYW89829 employs a high level of integration to minimize external components, reducing the device footprint and costs associated with implementing Bluetooth® Low Energy solutions. AIROC™ CYW89829 is the optimal solution for industrial and automotive use cases such as car access, battery management systems, automotive sensors, and other applications requiring Automotive AECQ-100 Grade-2 qualification. The AIROC™ CYW89829 Bluetooth® LE system on chip offers the best power-saving features and modes without significantly compromising the compute performance.

CYW89829 has an integrated PA with 10 dBm radio frequency (RF) output that enables applications requiring a high link budget and robust RF performance.

This application note requires the user to have basic knowledge about the AIROC™ CYW89829 architecture, and the ability to develop an AIROC™ CYW89829 application using ModusToolbox™ software. To get familiarized with the ModusToolbox™ environment, see the ModusToolbox™ user guide.

1.1 Infineon resources

Infineon provides a wealth of data at the www.infineon.com page to help you to select the right IoT device for your design, and quickly and effectively integrate the device into your design. Infineon provides customer access to a wide range of information, including technical documentation, schematic diagrams, product bill of materials, PCB layout information, and software updates. Customers can acquire technical documentation and software from the Infineon Developer Community.

1.1.1 ModusToolbox™

Infineon provides ModusToolbox™ as the software development platform for CYW89829 applications. ModusToolbox™ is a set of tools that enable you to integrate Infineon devices into your existing development methodology. One of the tools is a multi-platform, Eclipse IDE that supports application configuration and development. See ***Help > Eclipse IDE for ModusToolbox™ Documentation > User Guide***.

1.1.2 Development kits

The CYW989829M2EVB-01[1] development kit is fully an automotive grade 2 compliant, useful for evaluating Bluetooth® applications using AIROC™ CYW89829 Bluetooth® LE system on chip over automotive temperatures with the use of a Miniprog4 for programming.

The CYW989829M2EVB-02[1] development kit is commercial temperature grade only, useful for evaluating Bluetooth® applications using AIROC™ CYW89829 Bluetooth® LE system on chip for non-automotive purposes without the need for Miniprog4.

For more information on the kit and CYW89829, including the user guide and schematics, see the AIROC™ CYW89829[1] product information.

[1]For information about products, contact Infineon Support.

2 CYW89829 power architecture

2.1 Low-power system features

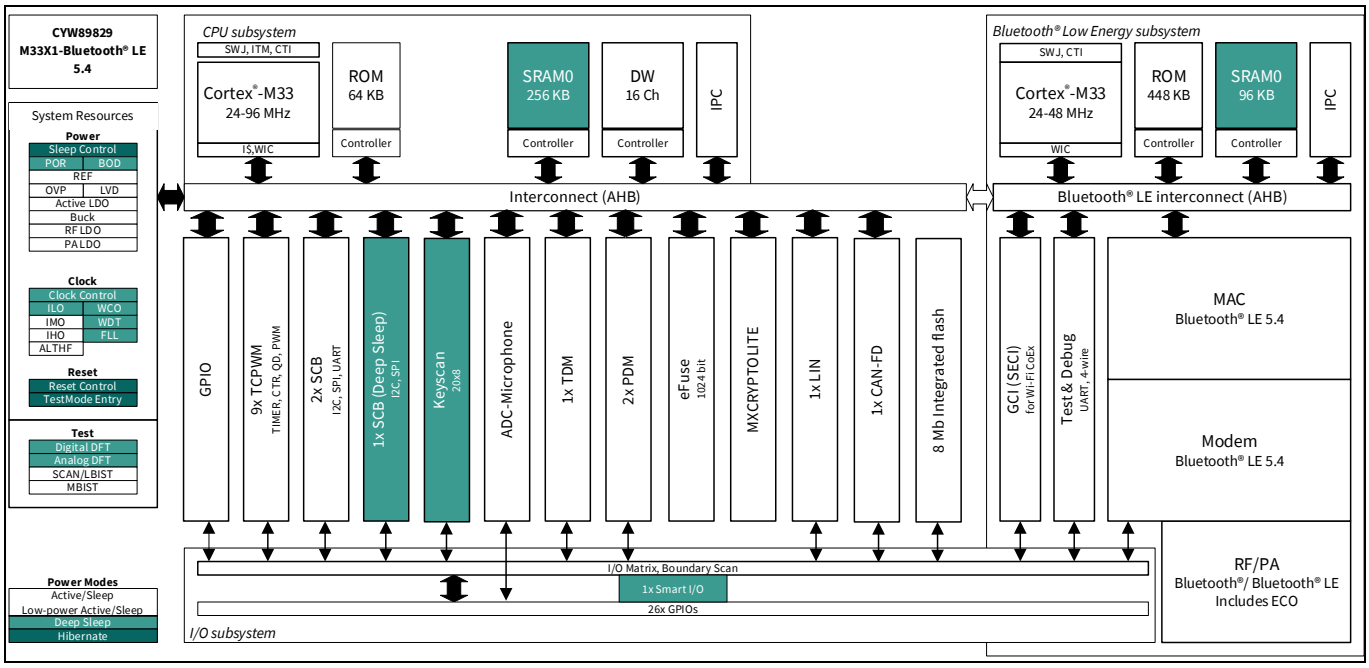

Figure 1 CYW89829 architecture

2.2 Clocks

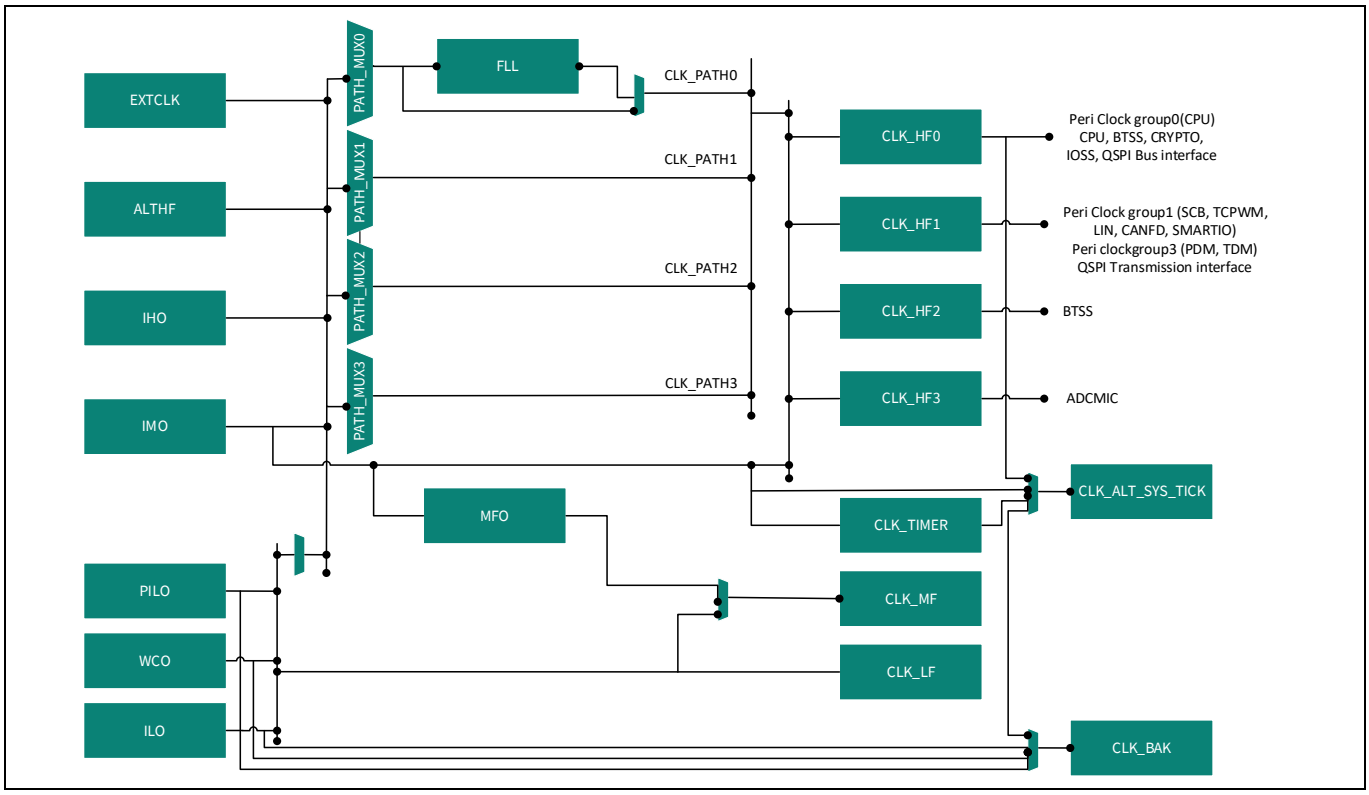

Figure 2 CYW89829 clock tree

2.3 CYW89829 power modes

CYW89829 can operate in the following system power modes. These modes are intended to minimize the average power consumption in an application.

The Arm® Cortex® M33 CPU core on CYW89829 can be operated in the following two voltage selection modes:

- **System low power (LP):** All peripheral and CPU power modes are available at full speed with a regulated voltage of 1.1 V.
- **System ultra-low power (ULP):** All CPU peripherals and power modes are available but with limited speed and 1.0 V voltage regulation.

CYW89829 has the following five SoC-level power modes:

- **CPU Active:** The CPU is executing code in system LP or ULP mode. The clock source to the CPU core can be chosen as minimum as 6 MHz to a maximum of 96 MHz.
- **CPU Sleep:** CPU code execution is halted in system LP or ULP mode. The clock source to the CPU core is gated in this mode.
- **System Deep Sleep:** Only low-frequency peripherals are available after MCU subsystem (MCUSS) and Bluetooth® subsystem (BTSS) CPUs enter CPU Deep Sleep mode.
- **System Deep Sleep RAM:** Only the RAM and I/O states are retained. All system activity except for select low-power peripherals stop until the system exits this state. The CPU resets upon exit but can skip software initialization because the RAM contents are retained.
- **System Hibernate:** Device and I/O states are frozen; the device resets on wakeup. Only Bluetooth® LE advertisements are possible on waking up from Hibernate mode.

Figure 3 shows the power mode transitions in CYW89829.

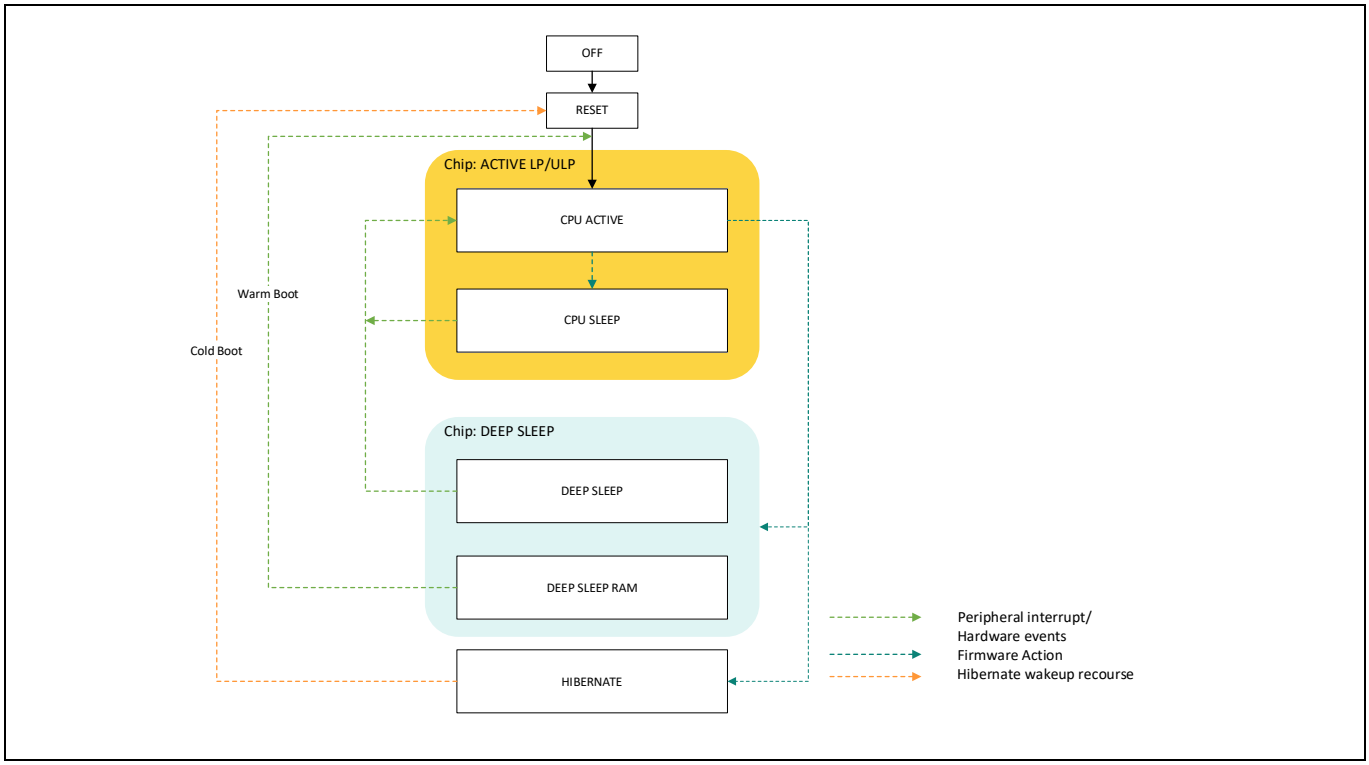

Figure 3 Power mode transitions

2.4 System power mode transition of MCU and Bluetooth® subsystems

You can control the power mode switching at the MCU subsystem (MCUSS) level, but the Bluetooth® subsystem (BTSS) handles internally its own power modes state transition. For the device to enter a low-power mode such as Deep Sleep, both CPUs should be in Deep Sleep. Figure 4 shows the transition between different power modes from power-on reset (POR).

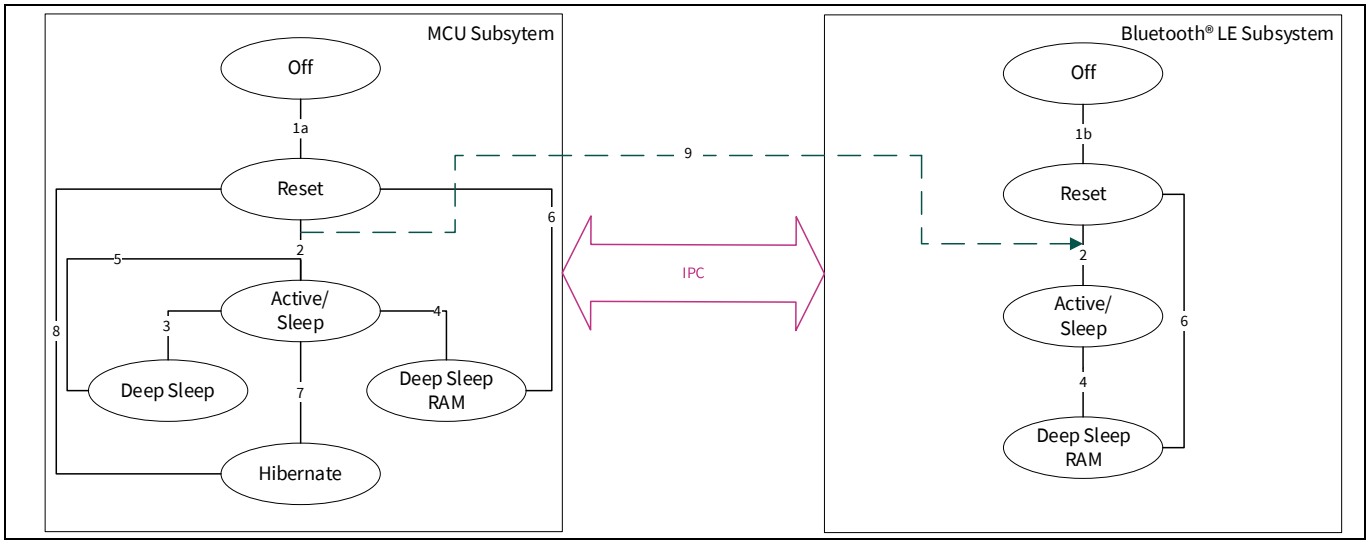

Figure 4 Power mode transitions of MCU subsystem and Bluetooth® subsystem

Table 1 Power mode transitions and triggers for MCUSS and Bluetooth® subsystem

Transition	Description	Transit triggers	Power mode
1a	MCUSS OFF to reset transition	Power supply applied to CYW89829	Active
1b	Bluetooth® subsystem OFF to reset transition. It stays in reset until the MCUSS releases it.	Power supply applied to CYW89829	Active
2	The MCUSS/Bluetooth® subsystem reset to Active mode transition. The Bluetooth® subsystem transition happens only after the MCUSS releases it from reset. Each subsystem can move between Active and Sleep modes independently.	Firmware (boot/startup) transitions from reset to Active mode. The MCUSS downloads configurations to the Bluetooth® subsystem (via inter-processor communication (IPC); both subsystems transition to Active mode.	Active
3	The MCUSS moves to Deep Sleep; the Bluetooth® subsystem moves to Deep Sleep RAM state. The Deep Sleep and Deep Sleep RAM power modes do not make any difference in Bluetooth® subsystem operation.	Firmware (OS idle task) transitions from Active to Deep Sleep mode.	Deep Sleep
4	Both MCUSS and Bluetooth® subsystem move to Deep Sleep RAM state.	Firmware (OS idle task) transitions from Active to Deep Sleep RAM mode.	Deep Sleep RAM

Transition	Description	Transit triggers	Power mode
5	The MCUSS moves from Deep Sleep to Active and resumes execution from where it entered Deep Sleep. The Bluetooth® subsystem moves to Active via the warm boot handler (Path 6).	Deep Sleep wakeup sources	Active
6	Both MCUSS and Bluetooth® subsystem transition from Deep Sleep RAM to Active independently and execute the respective warm boot handler.	Deep Sleep wakeup sources	Active
7	The MCUSS initiates transition to Hibernate mode; the Bluetooth® subsystem cannot ignore this state. The device enters Hibernate mode.	Firmware transitions from Active to Hibernate mode.	Hibernate
8	The MCUSS transitions from Hibernate to Active.	Hibernate wakeup sources	Active
9	The MCUSS releases the Bluetooth® subsystem from reset.	Bluetooth® LE stack initialization	Active

Note: *Power mode transitions for the Bluetooth® subsystem (for example, Active to Sleep) is handled internally by the radio controller firmware; the user application does not have to handle these transitions.*

2.5 System power modes

CPU Active, Sleep, and Deep Sleep are standard Arm®- defined power modes supported by the Arm® CPU instruction set architecture (ISA). System LP, ULP, Deep Sleep, Deep Sleep RAM and Hibernate modes are additional low-power modes supported by CYW89829.

The CPU can be selectively placed in Sleep and Deep Sleep power modes as defined by Arm®. The CPU also implements a Deep Sleep RAM (DS-RAM) mode in which almost all the circuits except RAM are powered OFF. Data in RAM is retained to maintain the state. Upon exit, the CPU goes through a reset but can use the data in RAM to skip software initialization.

Table 2 gives more details for each power mode.

Table 2 System state in power modes

Power mode	Description	SRAM	Available peripherals	Wakeup sources	Wakeup time	Boot	Reinit required
Low-power Active	All resources are available with maximum speed (up to 96 MHz)	ON	All peripherals	NA	NA	NA	No
Ultra-low power Active	All resources are available but at a lower speed (up to 48 MHz)	ON	All peripherals	NA	NA	NA	No

Power mode	Description	SRAM	Available peripherals	Wakeup sources	Wakeup time	Boot	Reinit required
CPU Sleep	CPU halts the execution. The rest of the system is available.	ON	All peripherals	All peripherals	NA	Resume	No
Deep Sleep	CPU halts execution. Most peripherals are turned OFF. High-frequency clocks are OFF. Low-frequency clocks available. SRAM memory is retained. Active mode retention registers are retained.	Retained	1xSCB key scan RTC WDT/MCWDT	GPIO SCB 0 WDT/ MCWDT RTC key scan Bluetooth® LE event	60 µs	Resume	No
Deep Sleep RAM	CPU halts execution. Most peripherals are in OFF state. High-frequency clocks are turned OFF. Low-frequency clocks are available. SRAM memory is retained. Active mode retention registers are not retained.	Retained	1xSCB key scan RTC WDT/MCWDT	GPIO SCB 0 WDT/ MCWDT RTC key scan Bluetooth® LE event	800 µs	Warm boot	Yes
Hibernate	CPUs and clocks are OFF. GPIO output states are frozen. RTC alarm and dedicated GPIO wakeup pins are available to wake up the system. Backup domain is available. SRAM is not retained.	OFF	RTC WDT/MCWDT GPIO P0.5, P1.4	Hibernate pins ‘0’ and ‘1’ RTC WDT/ MCWDT	2000 µs	Cold boot	No

2.5.1 System power mode selection in Device Configurator

Device Configurator contains several tabs, each of which provides access to specific resources. Do the following:

1. In the Project Explorer, right-click on the project and select **ModusToolbox™** > **Device Configurator**.
2. Launch the Device Configurator for the selected application. See the Device Configurator user guide for more details.
3. Select the system to view the options for chip-wide configuration settings such as system clocks, power management, and debug interfaces.
4. Select the power subsection under System to view configurable power parameters available in CYW89829 as shown in Figure 5.

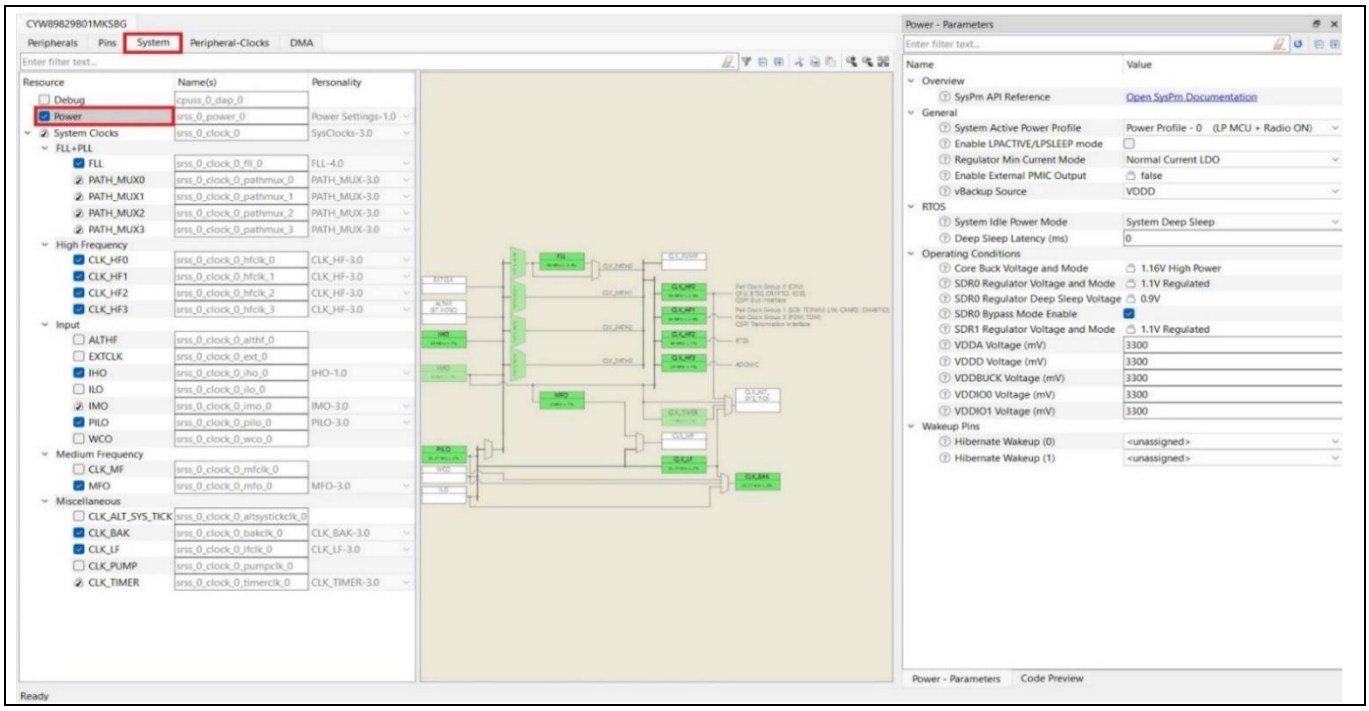

Figure 5 CYW89829 power mode selection

Table 3 System power parameters

Sl. No	Parameter	Description	Range/options
1	System Active Power Profile	Selects the System Active power profile	**Options**: Power Profile - 0 (LP MCU + Radio ON) Power Profile - 1 (ULP MCU + Radio ON) Power Profile - 2A (LP MCU Only) Power Profile - 2B (LP MCU Only) Power Profile - 3 (ULP MCU Only)
2	Regulator Min Current Mode	Enables regulator minimum current mode	**Options**: Normal Current LDO Minimum Current LDO

Sl. No	Parameter	Description	Range/options
3	System Idle Power Mode	Selects the required power mode that the system stays in idle state	Options: Active CPU Sleep System Deep Sleep System Deep Sleep RAM
4	hibernate_wakeup[0]	Reserves the hibernate_wakeup[0] pin to use it as the wakeup source from Hibernate power mode	P0.5 (Fixed)
5	hibernate_wakeup[1]	Reserves the hibernate_wakeup[1] pin to use it as the wakeup source from Hibernate power mode	P1.4 (Fixed)

- **Power Profile - 0 (LP MCU + Radio ON):** All peripheral and CPU power modes are available with a maximum configurable CPU clock at 96 MHz with a regulated voltage of 1.1 V. Bluetooth® functionality is available because the radio module is powered ON.
- **Power Profile - 1 (ULP MCU + Radio ON):** All CPU peripherals and power modes are available with the maximum frequency of 48 MHz and operating at 1.0 V voltage regulation (see Section 4.3.3). Bluetooth® functionality is available because the radio module is powered ON.
- **Power Profile - 2A (LP MCU Only):** All peripheral and CPU power modes are available at full speed (96 MHz) with a regulated voltage of 1.1 V, but Bluetooth® functionality is not available because the radio module is in OFF state. The core buck voltage and mode are set to high power 1.16 V and SDR0 is set to regulated 1.1 V.
- **Power Profile – 2B (LP MCU Only):** All peripheral and CPU power modes are available at full speed (96 MHz) with a regulated voltage of 1.1 V, but the Bluetooth® functionality is not available because the radio module is in OFF state. The core buck voltage and mode are set to low-power 1.1 V and SDR0 is set to bypassed 1.1 V.
- **Power Profile - 3 (ULP MCU Only):** All CPU peripherals and power modes are available with the maximum frequency of 48 MHz and operating with a regulated voltage of 1.0 V. Bluetooth® radio module is turned OFF.
- **Regulator Min Current Mode:** The user is responsible for ensuring that the regulator current limit is met in their application. Two options are provided: (1) Normal Current LDO (2) Minimum Current LDO.
  - **Normal Current LDO:** Sets the system to normal regulator current mode, which modifies system operation in LP or ULP modes to provide maximum core current consumption. If the LDO core regulator is in use, normal mode output current limits may be used. If the buck regulator is in use, its reduced current output limits still apply.
  - **Minimum Current LDO:** Sets the system to minimum core regulator current mode, which limits the maximum current available for the system core logic. This mode modifies system operation in LP or ULP modes to further reduce the current consumption. If the system current is below the datasheet current limits for the active core voltage regulator (LDO or buck), this mode may be entered.
- **System Idle Power Mode:** The device stays in the selected idle power mode in idle state (for example, Active/Sleep/Deep Sleep/Deep Sleep RAM).
- **Hibernate Wakeup:** Wakeup pins are meant to wake up the device from Hibernate power mode. When the device wakes up from Hibernate, it goes through a cold boot procedure (see Section 3.1).

Device Configurator generates a set of macros as well as an initialization function using the options for regulators, peripherals, pins, clock sources, power modes, and profiles. All this functionality can also be done using the System Power Management (SysPm) library can help you enable advanced use cases.

3 Power management by software

3.1 Boot

The boot procedure involves the initialization of various blocks of the CYW89829 SoC to get into a basic operational mode before entering the application `main()` function. The boot procedure is invoked on POR, software reset, Hibernate wakeup, and Deep Sleep RAM wakeup.

CYW89829 supports two types of boot procedures depending on the power mode:

- **Cold boot:** POR, software reset and Hibernate wakeup will go through the cold boot procedure.
- **Warm boot:** Deep Sleep RAM wakeup will go through the warm boot procedure.

Note: The boot procedure is not involved when waking up from CPU Sleep and Deep Sleep power modes. The type of boot procedure can be determined using the `Cy_SysPm_GetBootMode()` function that can be called in the beginning of the `main()` function so that appropriate action can be taken in the application according to the type of boot executed.

3.1.1 Cold boot

In this boot mode, system clocks and related clock paths are initialized and then the C runtime environment is set up before entering the `main()` function. For Hibernate wakeup, the device resets everything except the backup power domain resources. There is a small difference for initial power ON where even the backup power domain is reset. For more details on backup power domain, see Section 4.4.

3.1.2 Warm boot

Waking up from Deep Sleep RAM mode will result in a warm boot procedure. Warm boot is a shortened version of the complete boot process. The application can specify an entry point for warm boot, which is the starting point of execution for the CPU upon waking up from Deep Sleep RAM. This results in shortened boot procedure execution time.

This is done by using the `Cy_Syslib_SetWarmBootEntryPoint()` function. Using this function, an entry point such as a function address can be specified along with the stack pointer value that needs to be restored. See Section 3.3. This feature enables you to implement a variety of use cases such as the device can enter the Deep Sleep RAM state after setting an RTC alarm interrupt. When the alarm interrupt is triggered, the device wakes up from Deep Sleep RAM, the CPU executes the warm boot procedure, and the control is transferred to the entry point function.

Note that the warm boot procedure does not initialize the Serial Memory Interface (SMIF) block, so to jump to any function in the flash, the SMIF block must be initialized in the entry point function. Therefore, the entry point function is stored in the SRAM. To restore CPU execution from the point where it has entered low-power mode, the `Cy_Syslib_SetWarmBootEntryPoint()` function must be called immediately after wake- for- interrupt (WFI) and then the stack pointer restored. You can initialize the SMIF block and then jump to the main function depending on the use cases.

3.2 System Power Management (SysPm) library

3.2.1 PDL

The Peripheral Driver Library (PDL) is a complete software tool that includes APIs for configuring peripherals and system registers to implement the desired functionality. PDL provides direct access to almost all hardware resources of the target device. It reduces the need to understand and directly access registers and bit structures.

Within the PDL, the System Power Management (SysPm) API provides functions to change power modes. The SysPm driver provides functions to register callback functions to execute before or after power mode transitions as shown in Figure 6. The PDL is automatically downloaded when you create a new application using the Project Creator tool. Alternatively, you can run the `make getlibs` command from modus-shell. Note that this library has drivers for subcategories 1A and 1B but CAT1B PDL drivers are supported only in CYW89829.

The SysPm PDL can be downloaded from ModusToolbox™ Peripheral Driver Library (mtb-pdl-cat1).

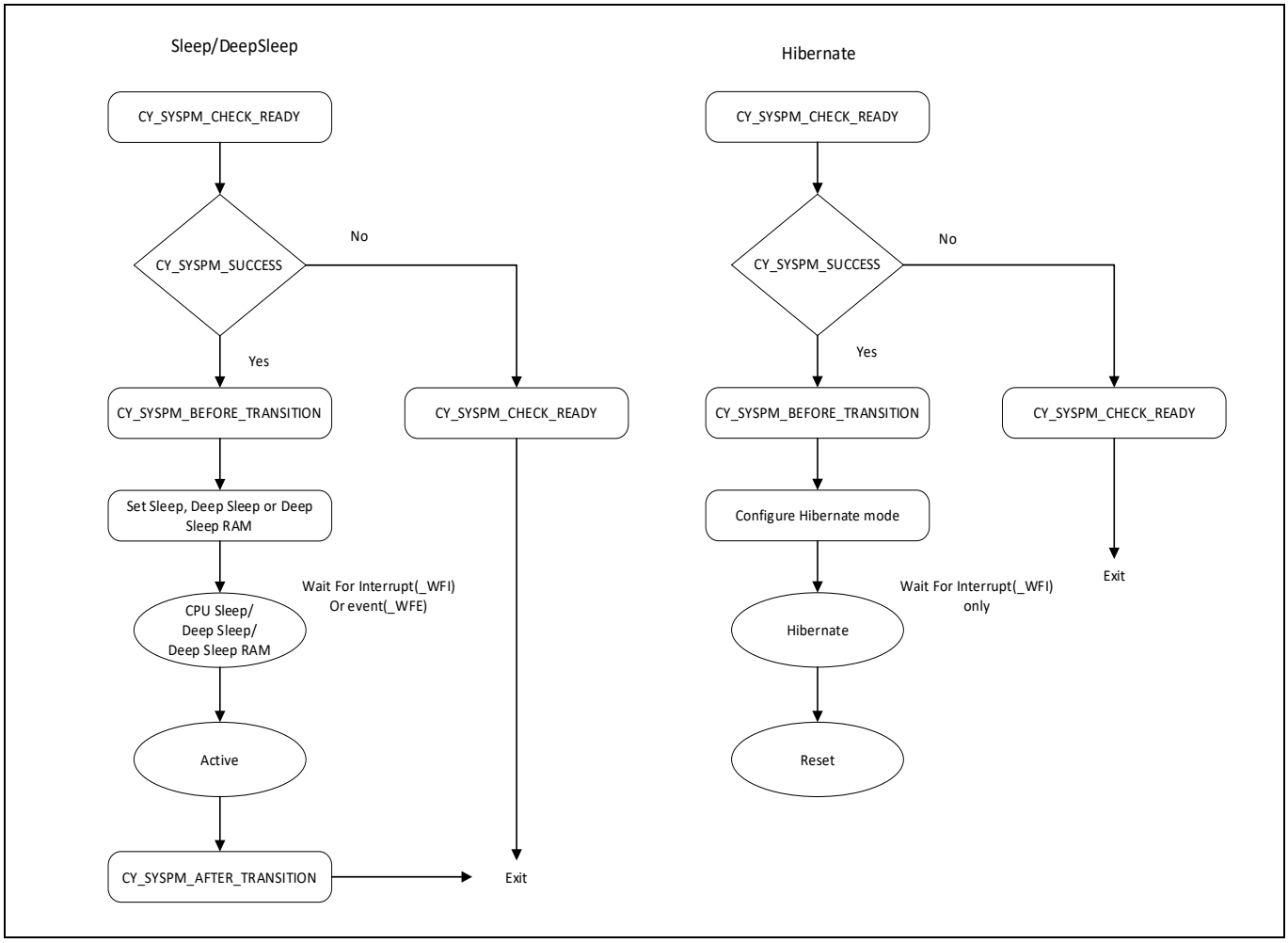

Figure 6 Power mode transitions

3.2.1.1 Callback modes

Table 4 CYW89829 MCU power mode callback operations

Callback function	Description
`CY_SYSPM_CHECK_READY`	Checks the ready state to transition to other mode. Exits without transition if it returns `CY_SYSPM_FAIL`.
`CY_SYSPM_CHECK_FAIL`	Callbacks execute only when `CY_SYSPM_CHECK_READY` fails. It executes the rollback action.
`CY_SYSPM_BEFORE_TRANSITION`	Callbacks execute and configure required actions before mode transition.
`CY_SYSPM_AFTER_DS_WFI_TRANSITION`	Performs the actions to be done after exiting Deep Sleep if entered and before interrupts are enabled.
`CY_SYSPM_AFTER_TRANSITION`	Callbacks execute after mode transition or configuration.

The SysPm driver provides two functions for callback registration and execution. These functions not only help in power optimization, but also in preventing the peripheral from entering an undesired state after mode transition. When using PDL and HAL, you should register callbacks for each power mode. Most peripheral drivers have predefined callbacks associated with each power mode. You can choose to register the defined peripheral callback or can make a custom callback. The SysPm transition function executes the registered callbacks sequentially; the first registered function is executed first. For more information, see Section 3.4.

3.2.2 HAL

The Hardware Abstraction Layer (HAL) provides a high-level interface to configure and use hardware blocks on MCUs. It is a generic interface that can be used across multiple product families. The focus on ease-of-use and portability means that the HAL library does not expose all the low-level peripheral functionalities. Within the HAL, the system power management (SysPm) API provides functions to power management at the system level. This API can be used to perform functions such as setting Hibernate wakeup sources, setting the CPU power state, registering entry/wakeup callbacks, and entering system Sleep and Deep Sleep.

The HAL library is automatically downloaded when you create a new application using the Project Creator tool or you run the `make getlibs` command from modus-shell. It is recommended to use the HAL library as much as possible and move to the PDL library only when specific functionality is not available in the HAL library.

The SysPm HAL library can be downloaded from the ModusToolbox™ Hardware Abstraction Layer (mtb-hal-cat1) page.

3.3 Implementing low-power mode transitions

3.3.1 Implementing low-power modes on a bare metal application

The system can enter the following power modes such as Sleep, Deep Sleep, Deep Sleep RAM, and Hibernate using the HAL or PDL APIs. The following table lists the HAL APIs to switch between the different system power modes.

Table 5 Power mode configuration using APIs

Power mode	APIs
Sleep	`cyhal_syspm_sleep()`
Deep Sleep	`cyhal_syspm_DeepSleep()`

Power mode	APIs
Deep Sleep RAM	`cyhal_syspm_DeepSleep()`
Hibernate	`cyhal_syspm_hibernate()`

Because the same APIs are used to transition the device into Deep Sleep as well as Deep Sleep RAM, configure the idle power mode to transition CYW89829 into the respective modes. You can configure idle power mode by using Device Configurator (see Figure 7), or by changing it during runtime with the help of the `Cy_SysPm_SetDeepSleepMode()` API.

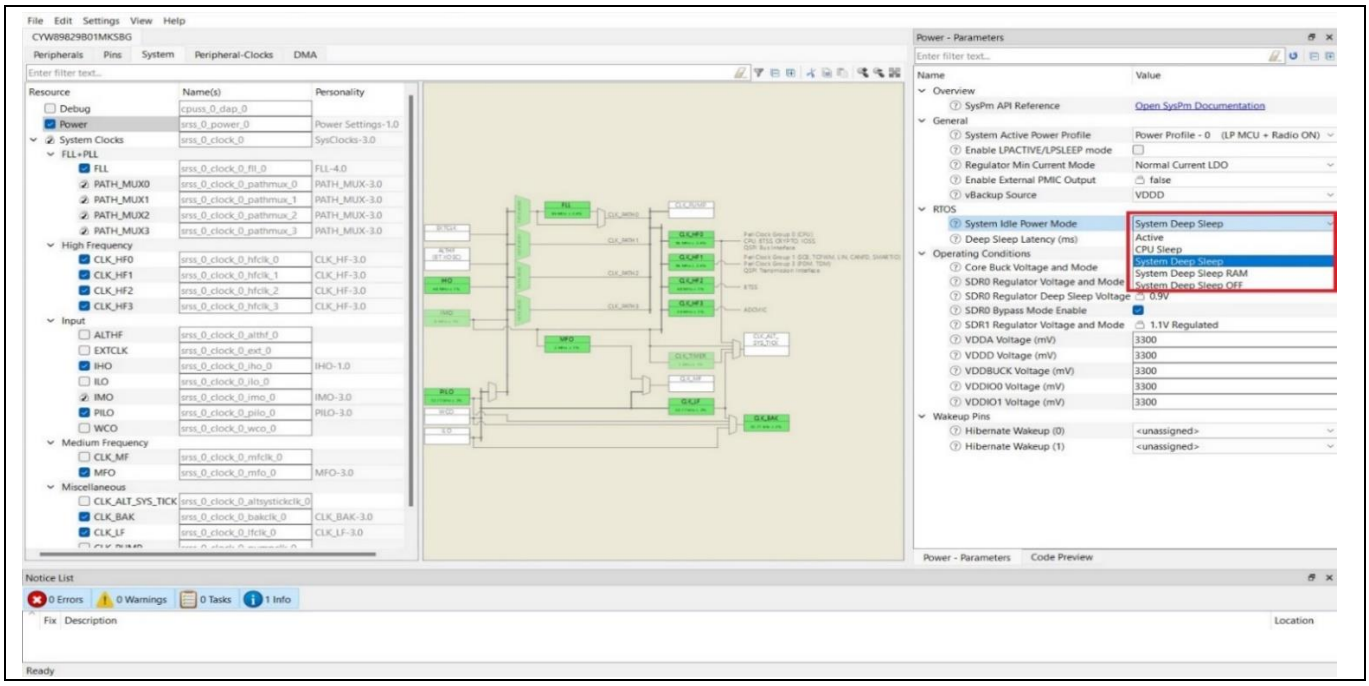

Figure 7 Configuring system idle power mode

3.3.1.1 Steps to perform before entering Deep Sleep RAM mode

1. Ensure that the warm boot entry point is set by using the `Cy_Syslib_SetWarmBootEntryPoint()` function. To know more about warm boot entry, see Section 3.1.2.
2. Register the Deep Sleep RAM callback with the priority set to '0' to '9' because the HAL SysPm callback priority is '10'.
3. Note that upon waking up from Deep Sleep RAM, the system callback functions that have been registered by dependent software framework layers will be executed first, followed by the application-registered callback functions.
4. Store NVIC registers to the RAM by using the `System_Store_NVIC_Reg()` function to ensure that the NVIC register data is persistent after the device wakes up from Deep Sleep RAM.

3.3.1.2 Steps to perform after waking up from Deep Sleep RAM mode

1. Enable all peripheral blocks through the peripheral control registers and unfreeze all the I/Os by using the `SystemInit_Warmboot_CAT1B_CM33()` function.
2. Initialize the SMIF block to use the flash.
3. Restore the NVIC data from the RAM by using the `System_Restore_NVIC_Reg()` function.

4. Execute the after-transition callback after exiting the low-power mode by using the `Cy_SysPm_ExecuteCallback()` function to perform the registered Deep Sleep RAM callbacks after wakeup.
5. In the registered Deep Sleep RAM callback, deinitialize and initialize the required peripherals.

The control will be redirected to other functions based on the application. The following code snippet showcases the process to be performed after waking up from DSRAM power mode.

Code Listing 1 Waking up from Deep Sleep RAM mode

```
/* DS-RAM Warmboot Re-entry */
    cy_stc_syspm_warmboot_entrypoint_t syspm_app_dsram_entry_point =
    {(uint32_t *)&__INITIAL_SP, (uint32_t *)cy_app_warmboot_handler};

CY_SECTION_RAMFUNC_BEGIN
int  cy_app_warmboot_handler(void)
{
    warm_boot=1;
    SystemInit_Warmboot_CAT1B_CM33();

    cybsp_smif_init();

    init_cycfg_all();

    System_Restore_NVIC_Reg();

    /* Suppress a compiler warning about unused return value */
    (void)Cy_SysPm_ExecuteCallback(((cy_en_syspm_callback_type_t)
 CY_SYSPM_DEEPSLEEP_RAM), CY_SYSPM_AFTER_TRANSITION);

    main();
    return 0;
}
CY_SECTION_RAMFUNC_END

cy_rslt_t cybsp_syspm_dsram_init(void)
{

    /* Sets the warm boot entry point and disables the debug pins */
    Cy_Syslib_SetWarmBootEntryPoint((uint32_t*)&syspm_app_dsram_entry_point,
 false);
```

Code Listing 1 Waking up from Deep Sleep RAM mode

```
    return CY_RSLT_SUCCESS;
}
```

3.3.2 Implementing low-power modes on FreeRTOS

The idle power mode determines all power mode transitions in FreeRTOS as shown in Figure 7. When idle power mode is configured as Deep Sleep RAM, a FreeRTOS framework is created in such a way that it can do the following:

- Store the current context of the idle task.
- Set the warm boot entry point.
- Store and re-store NVIC registers to/from the RAM.
- Execute the after-transition callback handler.

3.3.2.1 Steps to perform before entering Deep Sleep RAM

1. Ensure that debug mode is disabled by passing the second parameter as 'false' to the `Cy_Syslib_SetWarmBootEntryPoint()` function.

2. When idle power mode is set to Deep Sleep, to enter Deep Sleep RAM at runtime, change the idle power mode at runtime by adding the following code block:

```
Cy_SysPm_SetDeepSleepMode(CY_SYSPM_MODE_DEEPSLEEP_RAM);
```

3. Add the Deep Sleep RAM latency by adding the following configuration in the application Makefile:

```
# Add additional defines to the build process (without a leading -D).
DEFINES+=CY_CFG_PWR_DEEPSLEEP_RAM_LATENCY=20
```

3.3.2.2 Steps to perform after waking up from Deep Sleep RAM

Re-initialize the required peripherals in the after-transition callback.

See Section 3.6.10 for more information of power transition in RTOS.

Note: When the device is in Deep Sleep RAM, by default, pins P1_0, P1_1, P1_2, and P1_3 are used for boot ROM JTAG activity. Therefore, using these pins in your program can cause false breaks. Debug mode can be disabled by passing the second parameter as 'false' to the `Cy_Syslib_SetWarmBootEntryPoint()` function.

3.4 Register callback functions using PDL

The following code snippet shows how to register the SysPm callbacks.

Code Listing 2 Registering system power mode callbacks

```
cy_stc_syspm_callback_params_t syspm_cpu_sleep_params;
cy_stc_syspm_callback_params_t syspm_deep_sleep_params;
```

Code Listing 2 Registering system power mode callbacks

```
cy_stc_syspm_callback_params_t syspm_hibernate_params;
cy_stc_syspm_callback_params_t syspm_dsram_params;

cy_stc_syspm_callback_t syspm_cpu_sleep_cb_handler =
{
    syspm_cpu_sleep_cb,
    CY_SYSPM_SLEEP,
    0u,
    &syspm_cpu_sleep_params,
    NULL,
    NULL,
    253
};

cy_stc_syspm_callback_t syspm_deep_sleep_cb_handler =
{
    syspm_ds_cb,
    CY_SYSPM_DEEPSLEEP,
    0u,
    &syspm_deep_sleep_params,
    NULL,
    NULL,
    253
};

cy_stc_syspm_callback_t syspm_dsram_cb_handler =
{
    syspm_dsram_cb,
    CY_SYSPM_DEEPSLEEP_RAM,
    0u,
    &syspm_dsram_params,
    NULL,
    NULL,
    0
};

cy_stc_syspm_callback_t syspm_hibernate_handler =
{
```

Code Listing 2 Registering system power mode callbacks

```
    syspm_hibernate_cb,
    CY_SYSPM_HIBERNATE,
    0u,
    &syspm_hibernate_params,
    NULL,
    NULL,
    253
};

Cy_SysPm_RegisterCallback(&syspm_cpu_sleep_cb_handler);
Cy_SysPm_RegisterCallback(&syspm_deep_sleep_cb_handler);
Cy_SysPm_RegisterCallback(&syspm_dsram_cb_handler);
Cy_SysPm_RegisterCallback(&syspm_hibernate_handler);
```

3.5 Implement custom callback functions using PDL

In the SysPm callback, you can define the actions to be performed before and after the power mode transition. For example, the following code snippet sets the CTS and RTS GPIOs to High-Z before entering Deep Sleep RAM mode and sets these GPIOs to the default pull-up configuration after wakeup.

Code Listing 3 Implementing user defined SysPm callback

```
CY_SECTION_RAMFUNC_BEGIN
cy_en_syspm_status_t
syspm_dsram_cb( cy_stc_syspm_callback_params_t *callbackParams,
                cy_en_syspm_callback_mode_t mode)
{
    cy_en_syspm_status_t retVal = CY_SYSPM_FAIL;
    CY_UNUSED_PARAMETER(callbackParams);

    switch(mode)
    {
        case CY_SYSPM_CHECK_READY:
        {
            retVal = CY_SYSPM_SUCCESS;
        }
        break;

        case CY_SYSPM_CHECK_FAIL:
        {
```

Code Listing 3 Implementing user defined SysPm callback

```
            retVal = CY_SYSPM_SUCCESS;
        }
        break;

        case CY_SYSPM_BEFORE_TRANSITION:
        /* Performs the actions to be done before entering the low power mode
*/
        {
            /*CTS and RTS pins are configured as analog hign-z as it is
connected to
             * kitprog3 and also drawing more current */
            cyhal_gpio_configure(CYBSP_BT_UART_RTS, CYHAL_GPIO_DIR_INPUT,
CYHAL_GPIO_DRIVE_ANALOG);
            cyhal_gpio_configure(CYBSP_BT_UART_CTS, CYHAL_GPIO_DIR_INPUT,
CYHAL_GPIO_DRIVE_ANALOG);

Cy_Syslib_SetWarmBootEntryPoint((uint32_t*)&syspmBspDeepSleepEntryPoint,
false);
            retVal = CY_SYSPM_SUCCESS;
        }
        break;

        case CY_SYSPM_AFTER_DS_WFI_TRANSITION:
        {

            retVal = CY_SYSPM_SUCCESS;
        }
        break;

        case CY_SYSPM_AFTER_TRANSITION:
        /* Performs the actions to be done after entering the low power mode
*/
        {
            if(Cy_SysLib_IsDSRAMWarmBootEntry())
            {
            cy_retarget_io_deinit();
            cy_retarget_io_init(CYBSP_DEBUG_UART_TX,
CYBSP_DEBUG_UART_RX,CY_RETARGET_IO_BAUDRATE);
            /*CTS and RTS pins are configured to it's default configuration
*/
```

Code Listing 3 Implementing user defined SysPm callback

```
            cyhal_gpio_configure(CYBSP_BT_UART_RTS, CYHAL_GPIO_DIR_OUTPUT,
CYHAL_GPIO_DRIVE_PULL_NONE);
            cyhal_gpio_configure(CYBSP_BT_UART_CTS, CYHAL_GPIO_DIR_INPUT,
CYHAL_GPIO_DRIVE_PULL_NONE);
            }
            retVal = CY_SYSPM_SUCCESS;
        }
        break;

        default:
            break;
    }

    return retVal;
}
CY_SECTION_RAMFUNC_END
```

3.6 Tips for active power saving

3.6.1 Gate current paths using CYW89829

The board may contain other components that draw power; therefore, you need to isolate the components that may draw current when not in use. GPIOs can source and sink higher currents to various components such as temperature sensors and digital mic. These GPIOs can be used to directly power some external peripherals (if the sensor requires within the GPIO supported current limit). The power to the external peripherals can then be directly controlled through the CYW89829 device; when not required, the peripherals can be turned OFF, thus saving power at the system level.

3.6.2 GPIO configuration

GPIOs can hold their logic states in low-power modes. This is helpful when you need to hold external logic at a fixed level, but it can lead to wasted power if the pins needlessly source or sink current. The specific power saving of this technique depends on the circuit attached to the specific GPIO pin.

Analyze your design and determine the best state for your GPIOs during low-power operation.

If holding a digital output pin at logic '1' or '0' results in the lowest current, match that digital level using `cyhal_gpio_write()`.

```
/* Set P0_0 to '0' for low power using HAL APIs */
    cyhal_gpio_write(P0_0,0u);
```

Configure all unused GPIOs to Analog High-Z unless there is a specific reason to use a different drive mode.

The Analog High-Impedance drive mode results in the lowest current for a GPIO pin. A pin's drive mode may be set using the `cyhal_gpio_configure()` HAL function.

```
/* Set P0_0 to Analog HI-Z for low power using HAL APIs. */
    cyhal_gpio_configure(P0_0, CYHAL_GPIO_DIR_INPUT,
CYHAL_GPIO_DRIVE_ANALOG);
```

3.6.3 Clock gating

Some clocks and peripherals can be disabled when they are not necessary.

Unused clock sources: The System Resources subsystem provides many internal clock sources. Clock sources that are not utilized by any peripheral blocks can be disabled. Note that some clock sources, such as the crystal oscillators (WCO) have relatively long startup times. Switching these circuits OFF and ON may result in more overall current.

Frequency can be reduced by either selecting a low-frequency source such as IMO or selecting a different output frequency (for example, FLL) or dividing the clock using the System Resources subsystem pre dividers or PERI dividers.

3.6.4 Copy/move data using DMA

Direct memory access (DMA) is a technique that enables data transfer to and from the memory without involving the CPU. By bypassing the CPU, DMA can significantly reduce CPU utilization and power consumption. DMA can read and write data in blocks, which reduces the number of memory accesses required and saves power. Additionally, DMA can transfer data in bursts, which improves bus utilization and reduces power consumption. DMA can perform data transfers simultaneously with CPU processing, reducing the latency and power consumption of a system. DMA can also eliminate wait states, which occur when the CPU has to wait for a slow device to complete a data transfer, thereby saving power.

Furthermore, DMA can reduce the number of interrupts generated by a system, which in turn reduces both the CPU utilization and power consumption. DMA can operate at a lower clock frequency than the CPU, resulting in reduced power consumption. Lastly, the DMA engine can be used in both system LP and ULP modes, allowing data to be transferred without the use of the CPU. Overall, DMA offers several ways to reduce power consumption in a system by minimizing the interaction between the CPU and peripherals.

3.6.5 ADC subsystem

The I2S (TDM) and PDM blocks are generally sourced by a high-frequency clock generated from the PLL. If the ADC subsystem is not in use, disable the I2S and/or PDM blocks. You must also disable the FLL which is the main reason for high current consumption. If the accuracy of the frame rates is not important for the application, do not use the FLL. Instead of using ADC subsystem interrupts to access its FIFO in firmware, use DMAs controlled by the FIFO-level triggers to reduce the number of CPU cycles required in the application so that the CPU can stay in a Sleep state longer or execute other tasks.

3.6.6 Periodic wakeup timers

A periodic wakeup from CPU Sleep mode is the most common way to reduce power consumption. The average power consumption is determined by the ratio of CPU Active period power consumption and CPU Sleep period power consumption.

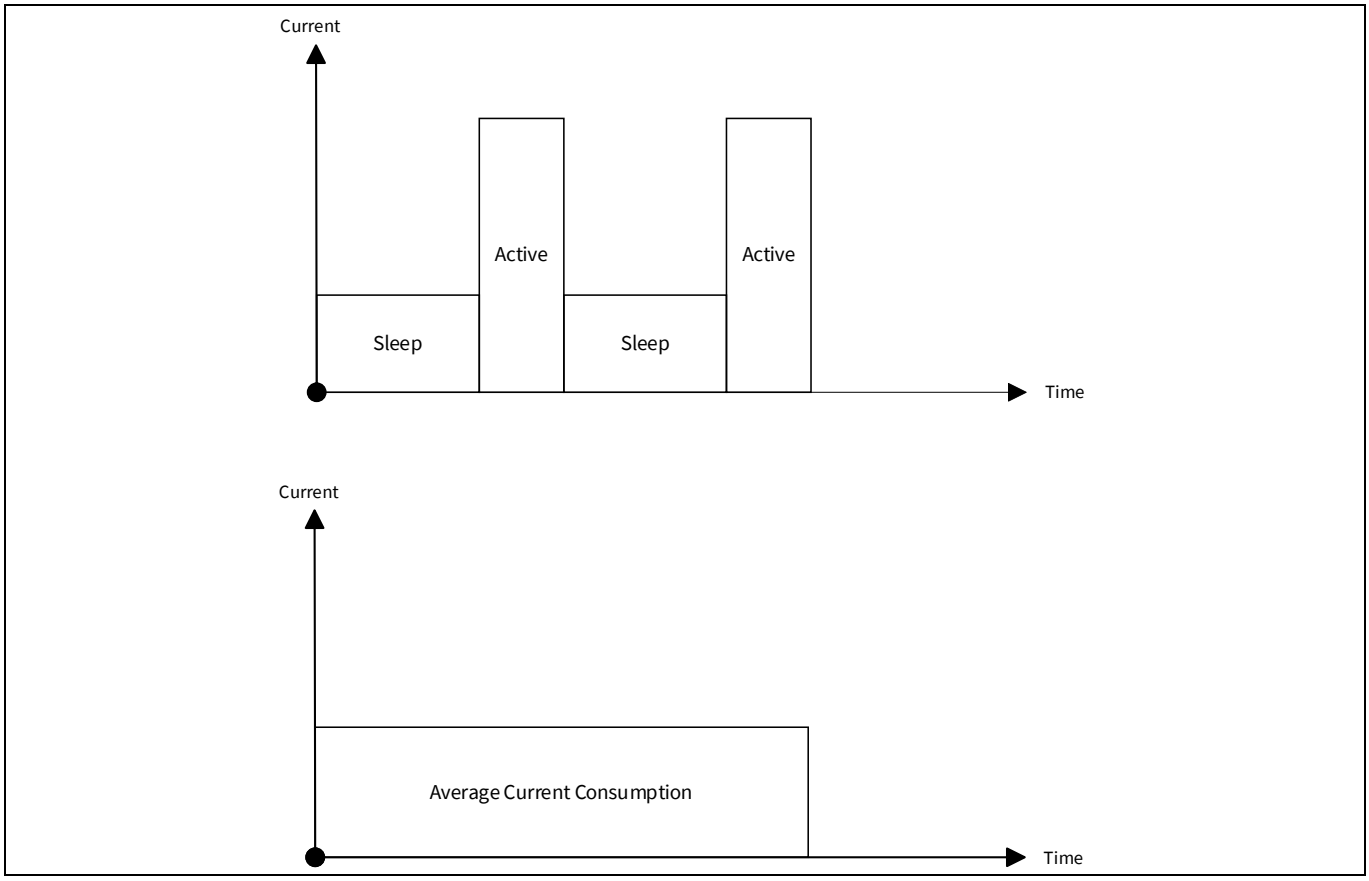

Figure 8 Periodic wakeup current consumption

3.6.7 SRAM

CYW89829 allows powering OFF individual SRAM banks or pages within a bank. The size of pages within a bank depends on the specific device and bank as detailed in the device datasheet. Specific devices will have one or more SRAM banks. Any unused page can be disabled by writing to the CPUSS power control registers. This technique is most useful in System Deep Sleep mode in which retaining 128 KB SRAM consumes 7.2 µA and while retaining 256 KB SRAM consumes 8.5 µA of operational current as mentioned in the datasheet.

The CYW89829 SRAM consists of 256 KB of memory; it is further divided into four pages as shown in Figure 9. Each page can be powered OFF individually by using the following code snippet; to do so, make sure that the respective page doesn't hold any data.

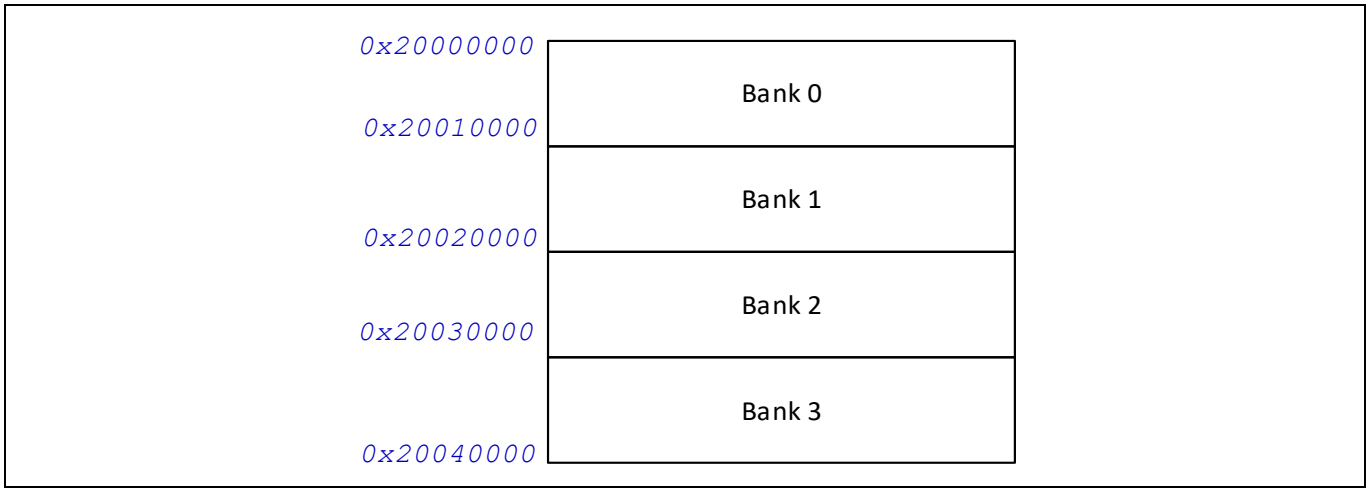

Figure 9 SRAM pages

The following changes need to be done in the application to power OFF the SRAM Bank 0:

1. Update the linker script in the *linker_ns_flash.ld* file to prevent that data from being placed in SRAM Bank 0:

```
RAM_START_ADDR_SAHB          = 0x20010000;
RAM_START_ADDR_CBUS          = 0x20010000;
```

2. Update the size of the SRAM in the *bsp.mk* file:

```
DEVICE_CYW89829B01MKSBG_SRAM_KB=192
```

3. Use the following function to power OFF SRAM Bank 0:

```
    /* To power OFF the certain RAM section */

Cy_SysPm_SetSRAMMacroPwrMode(CY_SYSPM_SRAM0_MEMORY,0,CY_SYSPM_SRAM_PWR_MODE_O
FF);
```

3.6.8 SCB

Avoid using blocking functions when sending or receiving data. Use interrupt-based events or an RTOS to transfer the data while yielding the CPU to other tasks. The idea behind this strategy is to keep the CPU in a Sleep state longer, instead of polling the status of the transmission. Figure 10 shows an example of blocking and non-blocking functions.

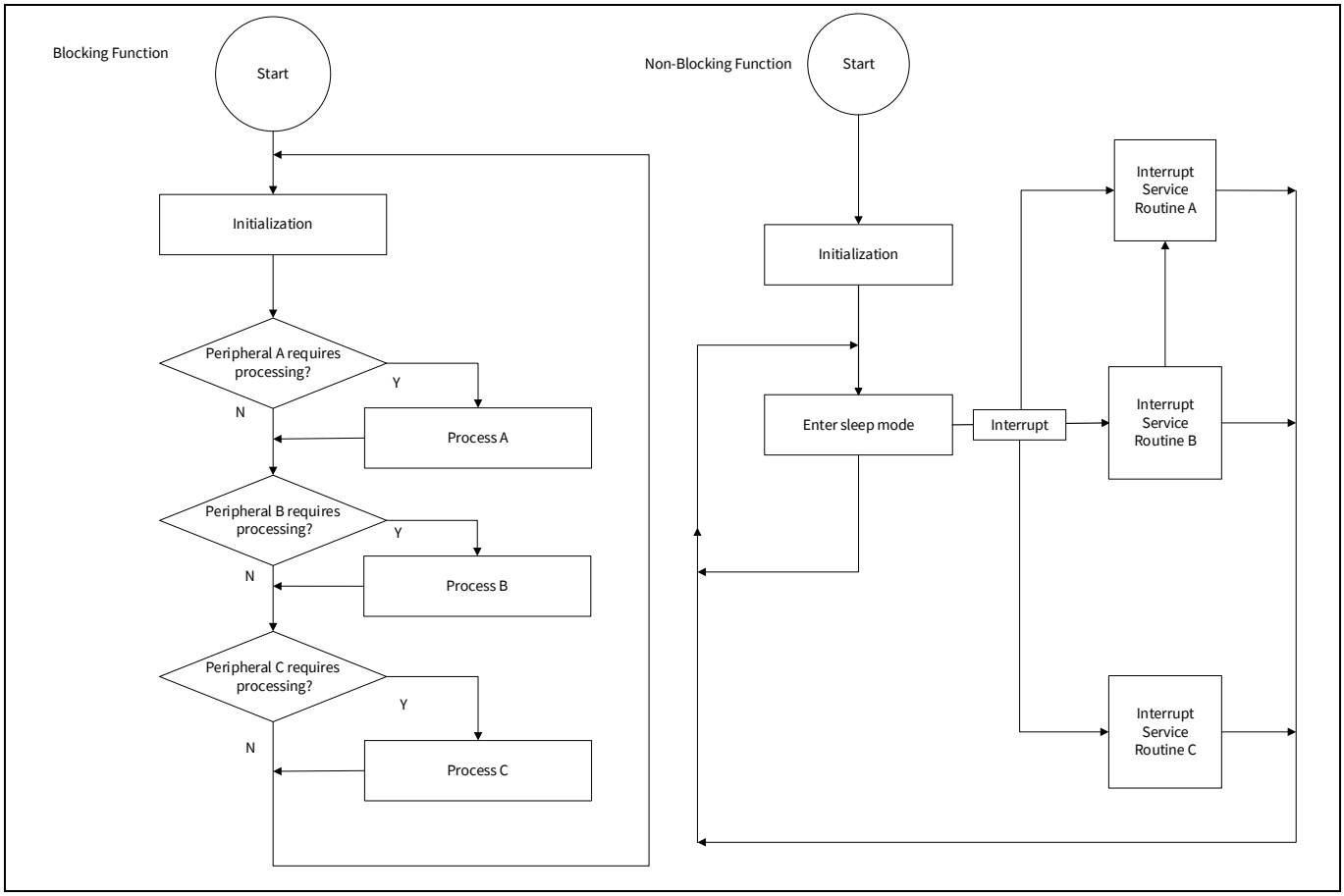

Figure 10 Example for blocking and non-blocking functions

Instead of using the SCB interrupt to access its FIFO in firmware, use DMAs controlled by the FIFO level to reduce the number of CPU cycles required in the application. This helps the CPU to stay in the Sleep state longer to reduce the power consumption, or it can execute other tasks. One of the SCBs in CYW89829 is available in Deep Sleep mode. This feature can be used to keep the system in Deep Sleep mode while waiting for serial communication data from an external device.

3.6.9 TCPWM

When using a counter, timer, or pulse width modulator (PWM), you should configure the clock sourcing the channel as low as possible while still meeting your frequency and accuracy requirements. For example, if you need to generate a 1-second interrupt with a timer, it is better to use a clock frequency of 1 kHz with the period equaling 1,000 counts than a clock frequency of 1 MHz with a period equal to 1,000,000 counts. The power savings from reducing the TCPWM clock is mostly linear based on the clock frequency.

The same idea applies when using a PWM to dim an LED. Use the minimum clock frequency possible that does not let the human eye perceive that the LED is blinking. 60 Hz is a good frequency for most applications. A comparison between the clock settings for the TCPWM block is shown in Figure 11.

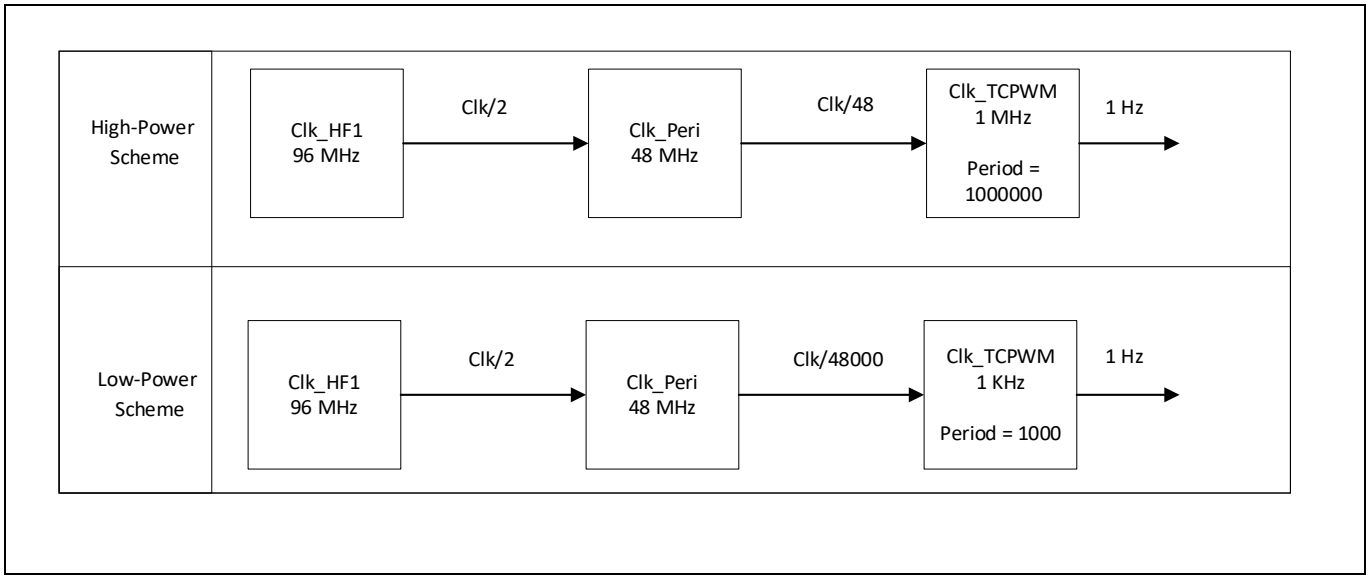

Figure 11 TCPWM clock settings comparison

The TCPWM block has a clock prescaler feature. For minimum power consumption, maximize the peripheral clock divider first before using the TCPWM Clock Prescaler. If the TCPWM block uses any pin connections, set the pins to Analog High-Z when the block is disabled.

3.6.10 RTOS tickless mode

All RTOS require a clock or a 'tick' for timing and managing tasks. These ticks are usually small RTOS kernel tasks that wake up periodically and update the RTOS tick count used by delays, timeouts, and other timing-related tasks. Often, these ticks are configured in ms. This results in the CPU waking up often just to service the tick task even if it is not running any useful tasks.

Applications that do not use delays or timeouts or use large delays need not wake up this often and can enter a tickless mode provided by the platform. In tickless mode, the RTOS suspends the tick task and lets the CPU enter a low-power state (Deep Sleep) for longer durations. This duration is typically determined by the time the next task that depends on a delay needs to be triggered. If there are no tasks dependent on delays, the device can remain in the low-power state indefinitely until an external event (such as a GPIO interrupt) wakes up the device and triggers the task.

When delays are involved while entering tickless mode, a timer that is active in the system Deep Sleep state is configured to generate an interrupt after the delay expires.

All RTOS platforms provide a tickless mode of operation. In addition, you can control whether the OS enters Sleep or Deep Sleep when idle. This is useful when the OS (CPU) can be idle but peripherals such as an ADC or UART still operate and require the system to not enter Deep Sleep. You can 'lock' Deep Sleep entry in such cases, allowing the CPU to enter Sleep instead and 'unlock' the Deep Sleep entry after the peripheral completes its operation.

4 Advanced power management

4.1 Power control architecture

CYW89829 uses the Arm® power control architecture. The components used to control a single power domain are shown in Figure 12.

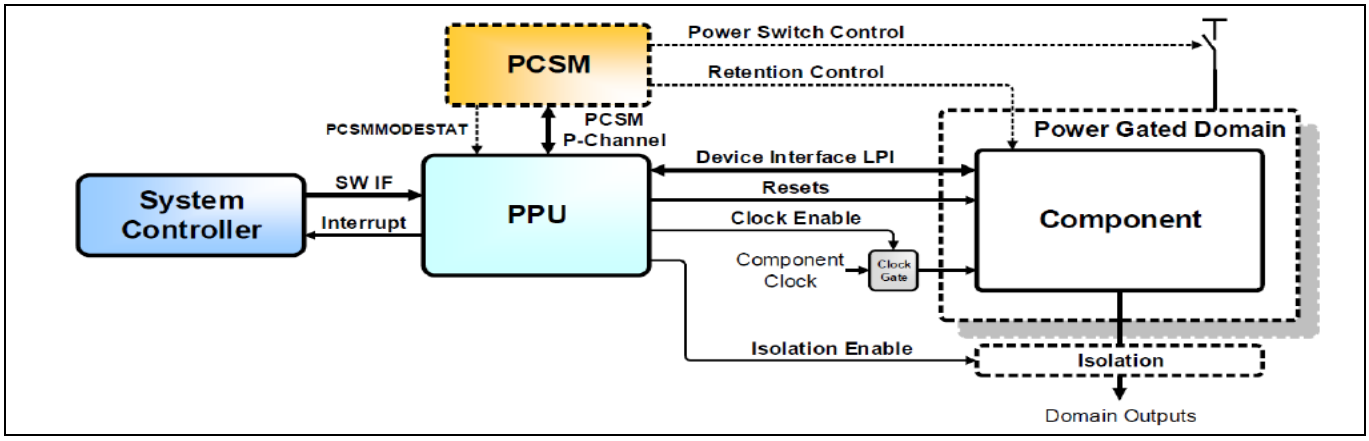

Figure 12 Power gating in Arm® power control architecture [5]

- **Power Policy Unit (PPU):** Usually controls a power domain, but it can also be used to implement separate reset domains within a single power domain. The “SW IF” is the software interface from the system controller (for example, M33 processor). It is an Advanced Peripheral Bus (APB) interface at the PPU, and it is mapped to the Advanced High-performance Bus (AHB) memory-mapped I/O (MMIO) through an asynchronous bus bridge. The interface labeled “LPI” stands for Low-Power Interface, which is usually implemented as a Q- or P-channel.
- **Power Control State Machine (PCSM)**: A custom hardware module that controls the power switches. System Controller refers to an MCU (for example, M33). For the specific case of the main active PPU that controls VCCACT_PD, the system controller is inside the power-gated domain. In this case, the software interface (SW IF) and Interrupt signals are isolated as required.

  There is one more custom component called “Power Dependency Control Matrix (PDCM)” that is present in Arm® reference design. All PPUs interface with the PDCM, which handles dependency relationships between power domains.

4.1.1 Power states supported by each PPU

CYW89829 has three PPUs. See Table 6 and Table 7.

Table 6 Power modes Supported by each PPU

PPU	PPU state
PPU_MAIN	FULL_RETENTION
	MEMORY_RETENTION
	OFF
	ON
PPU_CPUSS	FULL_RETENTION
	OFF

PPU	PPU state
	ON
PPU_SRAM	MEMORY_RETENTION
	OFF
	ON

Table 7 PPU configuration towards Deep Sleep state

Deep Sleep state	PPU power modes
Deep Sleep	PPU_MAIN: FULL_RETENTION
	PPU_CPUSS: FULL_RETENTION
	PPU_SRAM: MEMORY_RETENTION
Deep Sleep RAM	PPU_MAIN: MEMORY_RETENTION
	PPU_CPUSS: OFF
	PPU_SRAM: MEMORY_RETENTION

4.2 Regulator topologies

The regulator block in CYW89829 is a switching boot regulator with linear, step-down regulators. This topology uses the core buck switching regulator (CBUCK) after a transition from OFF or XRES. The CBUCK target voltage is programmable.

Two linear stepdown regulators (SDR0 and SDR1) generate core rails for system usage:

- SDR0 generates VCCD, which is the CPU core voltage.
- SDR1 is for general usage. It can be used as either for an independent digital domain or as a regulator for the Bluetooth® LE radio.

4.3 Core voltage selection

4.3.1 Linear regulator and buck regulator

- **Core buck regulator (CBUCK):** This regulator can either directly generate VCCD, or it can generate an intermediate voltage (VCCI) for use by step-down regulators. When the device is in Deep Sleep, the VCCD voltage will be changed to 0.9 V.
- **Linear step-down regulators (SDR0 and SDR1):** Each SDR is a linear LDO regulator that uses VCCI to generate a low-voltage core supply rail (for example, VCCD). Both CBUCK modes (low-power and low-ripple) work with the SDRs target the platform voltage levels (1.0 V and 1.1 V) with either sufficient headroom for the SDR to work or in bypass mode. SDR0 can be bypassed when the input voltage is too low for regulation and is within the timing closure of the connected logic.
- **HV-LDO:** This is a linear low drop-out regulator that uses VDDD to generate a programmable voltage.

4.3.2 Assignment of regulators

- SDR0 is assigned to be the digital step-down regulator.
- SDR1 is assigned to be the RF step-down regulator (RF-SDR) for use by the Bluetooth® subsystem. During Deep Sleep, this SDR is disabled.
- HV-LDO is assigned to be the PA-LDO to supply the power amplifier in the radio for 10 dBm transmit case.

4.3.3 Regulator operations

- **CBUCK:** This regulator operates in low-ripple and low-power modes. Low-ripple mode is used when the radio is operating.
- **SDR0 (D-SDR):** This regulator operates in bypass or regulation mode, depending on the configuration and input voltage. This allows the CBUCK regulator to directly target the digital voltage, which improves overall power efficiency when the digital system is operating but the radio is not. It is expected to operate in bypass and regulation modes using CBUCK low-power or low-ripple modes. The SDR0 voltage can be changed through Device Configurator by selecting the System Active profile to ULP. This can also be changed it at runtime by using the following code snippet:

Code Listing 4 Configuring the SDR0 voltage configurations

```
#define CY_CFG_PWR_SDR0_VOLT CY_SYSPM_SDR_VOLTAGE_1_000V

static cy_stc_syspm_sdr_params_t sdr0ConfigParam =
{
    .coreBuckVoltSel = CY_CFG_PWR_CBUCK_VOLT,
    .coreBuckMode = CY_CFG_PWR_CBUCK_MODE,
    .coreBuckDpSlpVoltSel = CY_SYSPM_CORE_BUCK_VOLTAGE_0_90V,
    .coreBuckDpSlpMode = CY_SYSPM_CORE_BUCK_MODE_LP,
    .sdr0DpSlpVoltSel = CY_SYSPM_SDR_VOLTAGE_0_900V,
    .sdrVoltSel = CY_CFG_PWR_SDR0_VOLT,
    .sdr0Allowbypass = CY_CFG_PWR_SDR0_MODE_BYPASS,
};

    /* SDR0 Regulator Configuration */
    Cy_SysPm_SdrConfigure(CY_SYSPM_SDR_0, &sdr0ConfigParam);
```

- **SDR1 (RF-SDR):** This regulator supplies the power to the radio, and it can assume that the CBUCK operates in low-ripple mode above the intended output voltage. It is not expected to operate in bypass mode using the CBUCK low-ripple mode.

4.4 Backup power domain

The backup power domain contains the following major components:

- Backup clock
  - ILO
  - WCO
  - PILO
- Real-time clock (RTC)
- Backup registers (BREG) to hold a small amount of application state.

The backup domain contains the logic that can survive most resets, including XRES. The backup domain supply pin (VBACKUP) can be entirely independent from VDDD, and it can continue running when VDDD is not present. VBACKUP should be connected to the always-available power supply source to maximize features and

compatibility with low-power modes. This can be an independent supply derived from a battery or super capacitor.

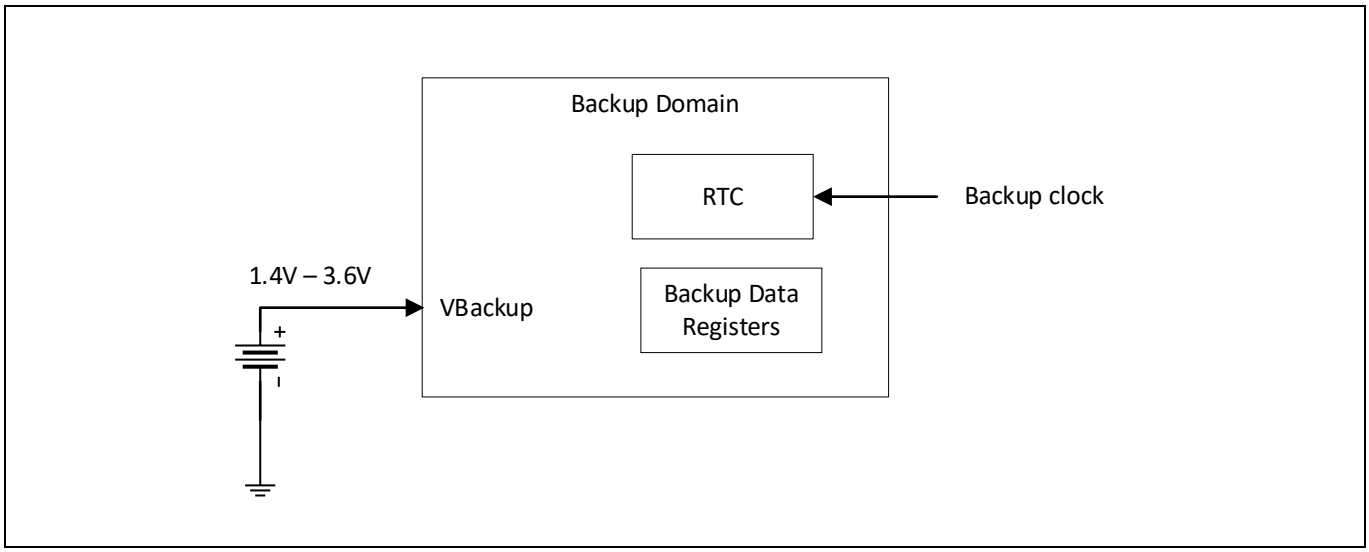

Figure 13 Backup domain block diagram

4.5 Backup data registers

The backup domain includes sixteen 32-bit registers, BACKUP_BREG[15:0], that retain their contents as long as the VBACKUP supply is valid. Each register holds 4 bytes of data for a total of 64 bytes. These registers are used to retain important system information and flags during power down of the full device. They can also be used during system Hibernate mode, allowing data to be read after device wake and reset. This can be used by the user to store some data in the backup domain so that it is retained even in case of power failures in the main supply. The handling of the backup registers is taken care of by the low-level driver APIs; the user application does not have any need to control these registers.

5 Low-power code examples

5.1 CE239178 – AIROC™ CYW20829 switching power modes

This code example shows how to transition the device to low-power and ultra-low-power system, and transition from Active to Sleep, Active to Deep Sleep, Active to Deep Sleep RAM and Active to Hibernate power modes.

The code example uses a user button to change the power modes from Active to Sleep, Active to Deep Sleep, Active to Deep Sleep RAM and Active to Hibernate. After the system enters Hibernate mode, it waits for the wakeup resource. Another user button changes the power system from low-power and ultra-low-power system and vice versa. This code example shows User button 1 as a wakeup resource. Figure 14 shows the state machine implemented in the firmware to execute the transitions.

Note: The CYW989829M2EVB-01 kit has only Button 1 on the kit. Button 2 is assigned to P1.0 (D3), you need to use a wire to connect P1.0 with GND to act as button pressing.

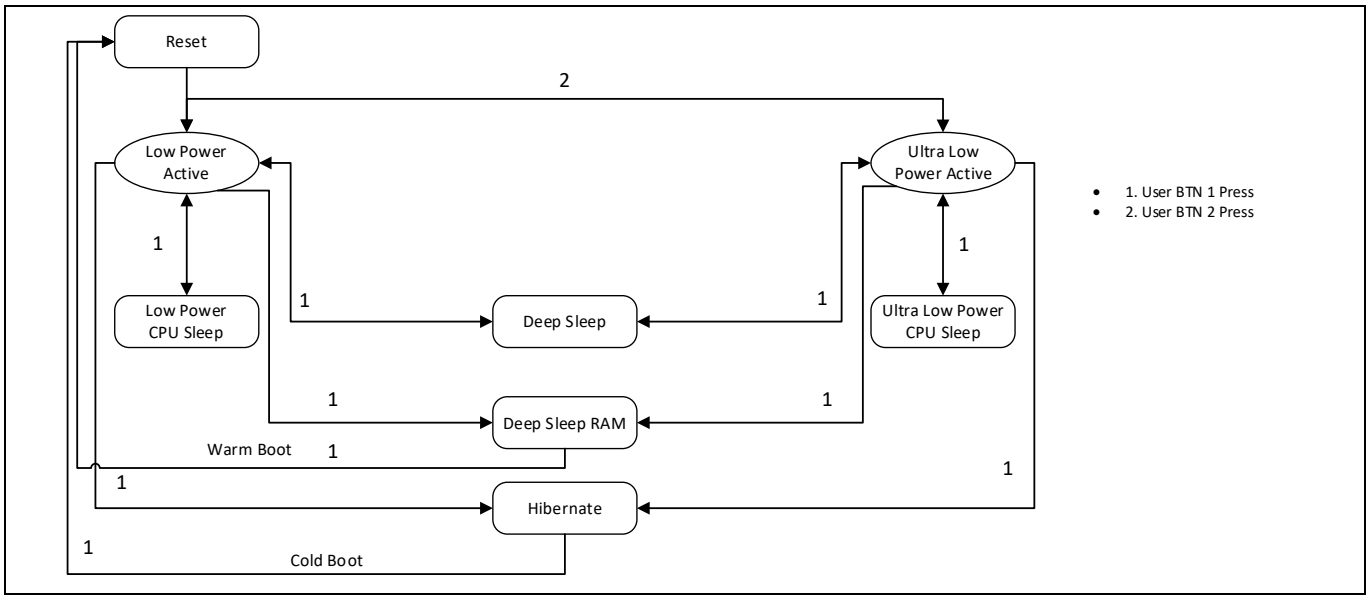

Figure 14 Power mode state machine

5.2 CE239179 – AIROC™ CYW20829 FreeRTOS switching power modes

This code example shows how to transition the device from Active to Sleep, Active to Deep Sleep, Active to Deep Sleep RAM and Active to Hibernate power modes.

The code example uses User button 1 to change the power modes from Active to Sleep, Active to Deep Sleep, Active to Deep Sleep RAM and Active to Hibernate. After the system enters Hibernate mode, it waits for the wakeup resource. This code example shows User button 1 as a wakeup resource. Figure 15 shows the state machine implemented in the firmware to execute the transitions.

Note: The CYW989829M2EVB-01 kit has only Button 1 on the kit. Button 2 is assigned to P1.0 (D3), you need to use a wire to connect P1.0 with GND to act as button pressing.

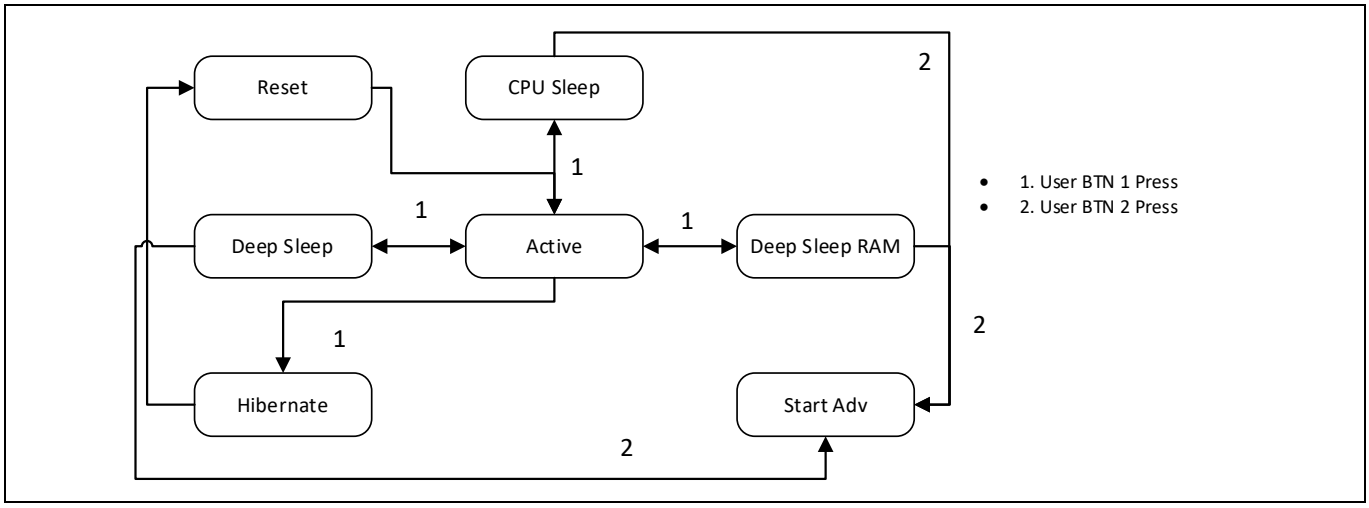

Figure 15 Power mode state machine

5.3 CE237278 – HAL RTC alarm periodic wakeup

This code example shows how to enter Deep Sleep and Hibernate modes, as well as how to use the RTC to generate an RTC alarm to wake up the MCUSS from Deep Sleep and Hibernate modes.

The MCU subsystem (MCUSS) enters either Deep Sleep or Hibernate mode based on the duration that the user button is pressed. The RTC alarm wakes up the system and prints the wakeup information to the UART terminal. Figure 16 shows the state machine implemented in the firmware to execute the transitions. For more information, see CE237278 - HAL RTC alarm periodic wakeup.

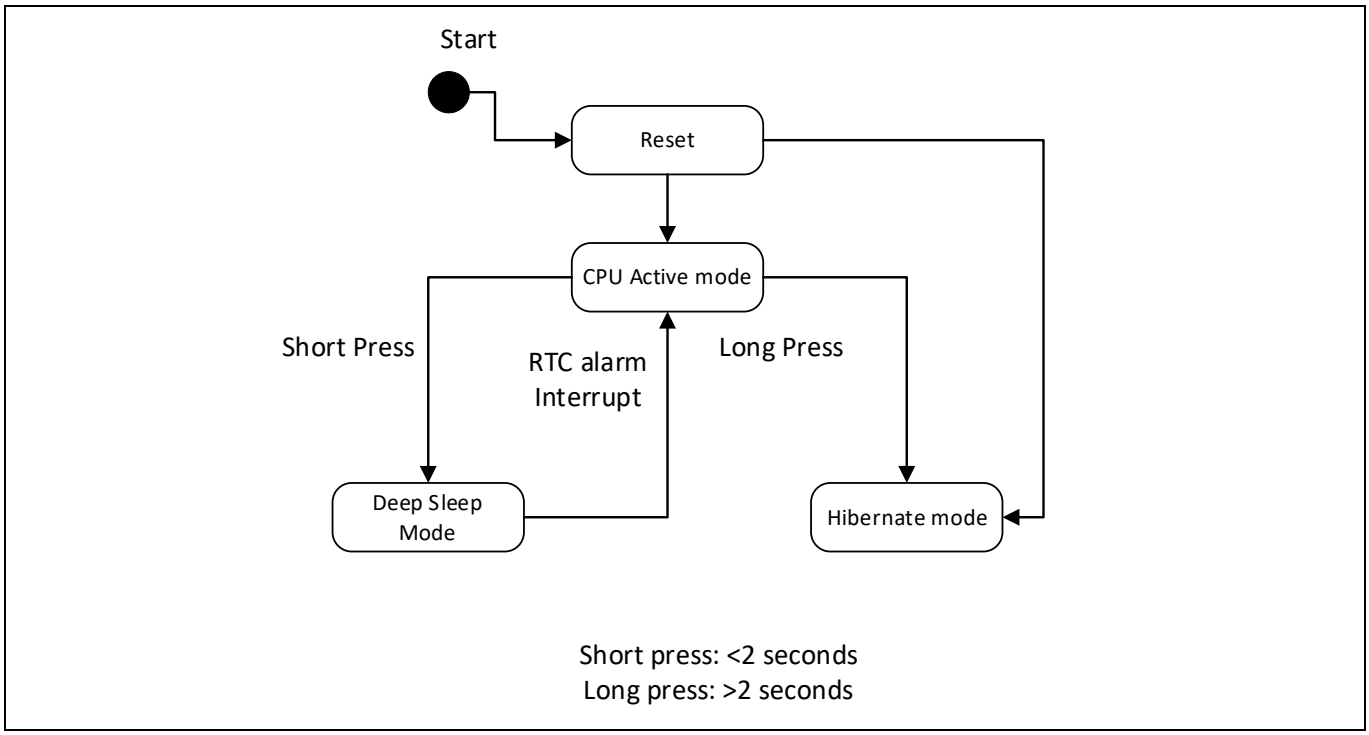

Figure 16 RTC periodic wakeup timer using interrupt

6 Power measurement

6.1 Hardware

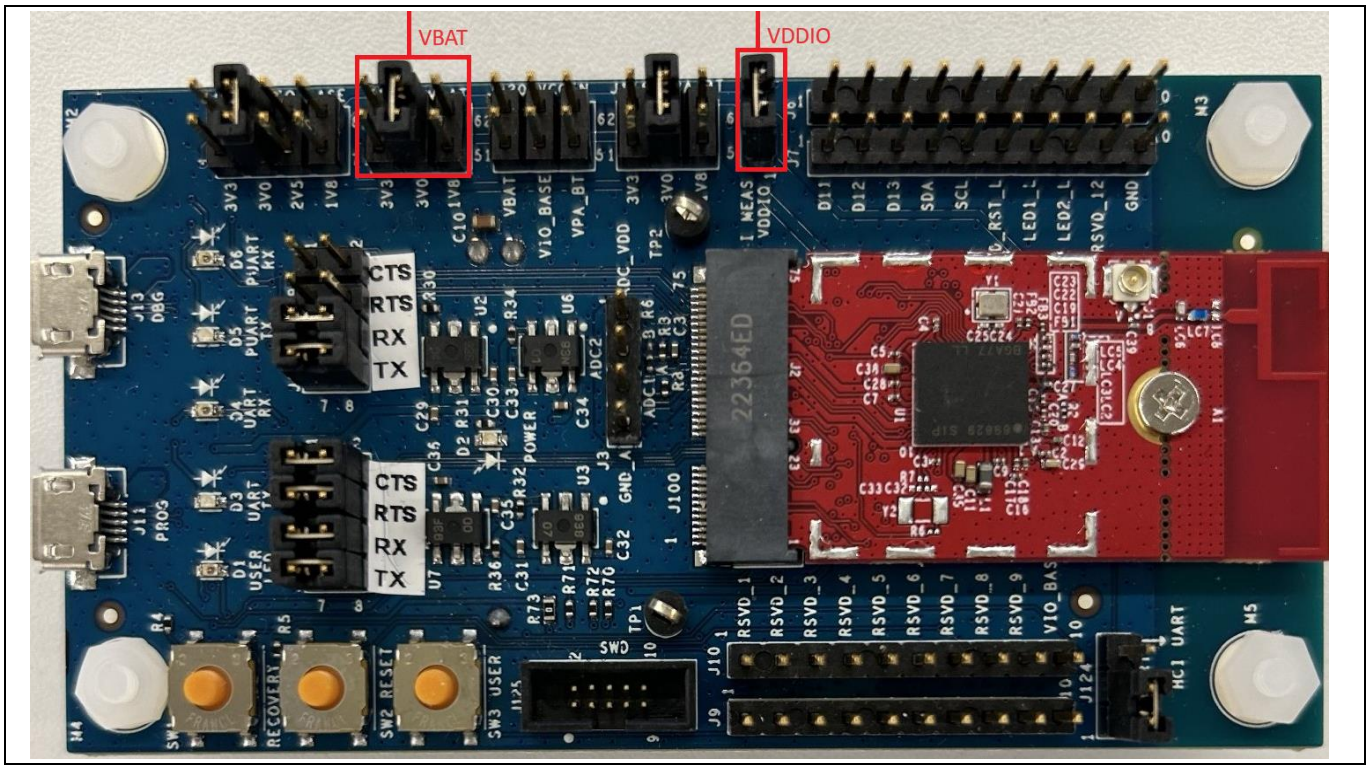

Figure 17 CYW989829M2EVB-01 current measurement

- To measure the current consumed by the VIO_BASE domain, connect an ammeter across pin 1 and 2 of jumper J2, which is VDDIO. In CYW89829M2EVK-01, the external flash is connected to VDDIO and a voltage regulator; therefore, the measured current on VDDIO may depend on the selected external serial flash and voltage regulator.
- To measure the current consumed by the VBAT+VDDPA domain, connect an ammeter across J119.2 (or J119.4 or J119.6) and one of the pins J119.1, J119.3, J119.5 based on the power supply chosen.

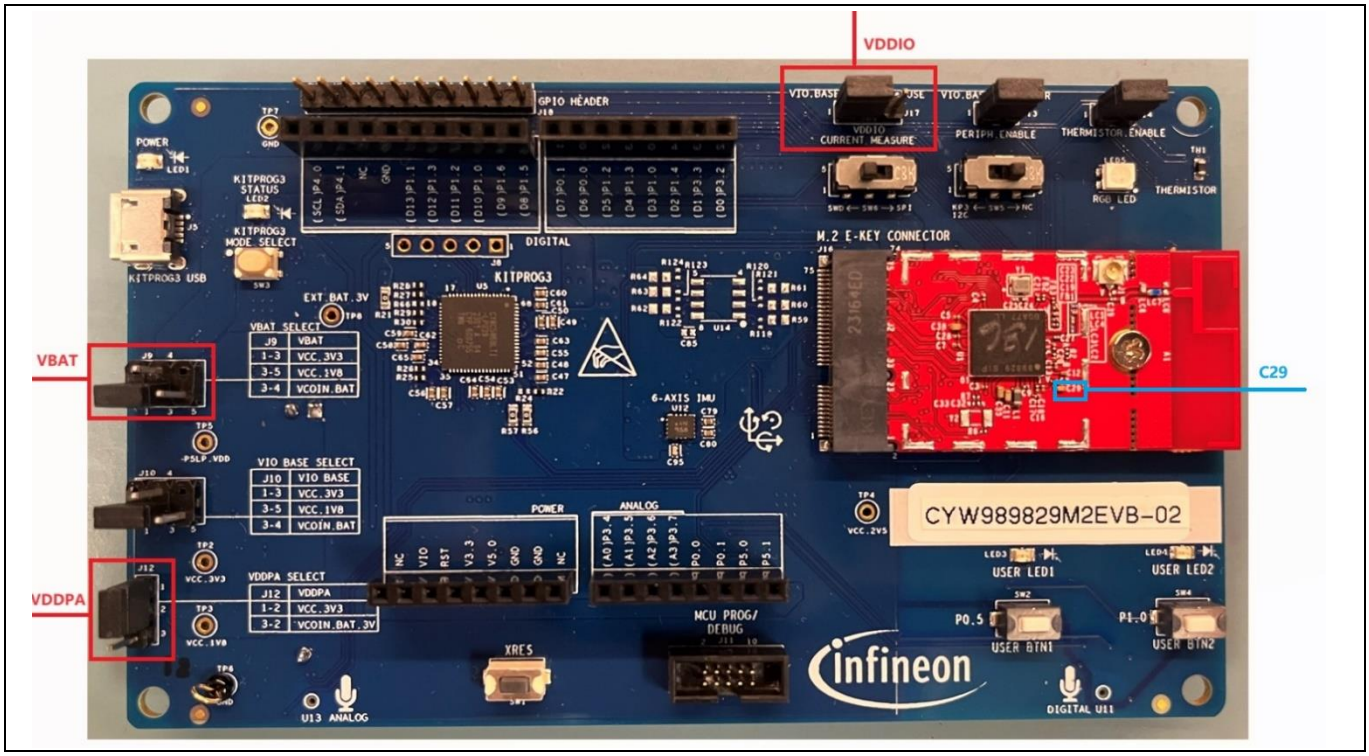

Figure 18 CYW989829M2EVB-02 current measurement

- To measure the current consumed by the VIO_BASE domain, connect an ammeter across pin 1 and 2 of jumper J17, which is VDDIO. In CYW989829M2EVB-02 external flash is connected to VDDIO and Voltage regulator, hence the measured current on VDDIO may depend on the selected external serial flash and voltage regulator.
- To measure the current consumed by the VBAT domain, connect an ammeter across J9.3 and one of the pins J9.1, J9.4, J9.5 based on the power supply chosen.
- To measure the current consumed by the VDDPA domain, connect an ammeter across J12.3 and one of the pins J12.1, J12.4, J12.5 based on the power supply chosen.
- To measure the VCCD voltage, connect a voltmeter across C29. This is useful for finding whether the device has entered Deep Sleep. When the device enters Deep Sleep, the voltage across C29 will be 0.9 V. When the CPU is in ULP mode and LP mode, the voltage across C29 will be 1.0 V and 1.1 V respectively.

6.2 Average current consumption

This section describes the average current consumption in low-power modes. The current is measured in each low-power mode for a certain period to calculate the average current consumption. The Active mode power consumption varies depending on various factors including the number of peripherals active and the operating clock frequency.

The connection interval preferred by the Bluetooth® LE GAP central device is used to establish the connection with the Bluetooth® LE GAP peripheral. Other values might be requested by the GAP peripheral device, but the GAP central device is still in charge of determining the connection parameters.

The connection interval and peripheral latency must be chosen optimally while trading off between power consumption and data throughput. For example, a longer connection interval (such as 4 seconds) will reduce the power usage but decrease the throughput. Therefore, you can increase the data throughput by lowering the connection interval value, but bear in mind that doing so will also result in an increase in power consumption.

On some peripheral devices, the Bluetooth® LE stack may let you select a minimum and maximum connection interval. Instead of selecting a value that is different from the minimum and perhaps beyond the permissible range for the peripheral device, the central can choose an acceptable value within the range using the maximum connection interval value that is provided by the peripheral.

In the following current measurement diagrams, the yellow lines represent the VBAT current. The green lines represent VDDIO.

Note: *CYW89829 current is measured in different modes PILO with 3 V.*

6.2.1 Sleep mode



Figure 19 Sleep connection idle with 1 s connection interval



Figure 20 Sleep disconnection idle

6.2.2 Deep Sleep mode

The current consumption is measured when the device is in Deep Sleep it consumes 8.23 µA at VBAT, 67 nA at VDDIO as shown in Figure 23 is significantly less than Active mode.

When it comes to connection idle state during Deep Sleep, the current consumption is at 41.80 µA for VBAT at 300 ms connection interval as shown in Figure 21. Current consumption during connection idle can be reduced further by increasing the connection interval. By increasing the connection interval in Deep Sleep from 300 ms to 1 s, the average current consumption is drastically reduced to 21.7 µA as shown in Figure 22.



Figure 21 Deep Sleep connection idle with 300 ms connection interval



Figure 22 Deep Sleep connection idle with 1 s connection interval



Figure 23 Deep Sleep disconnection idle

6.2.3 Deep Sleep RAM mode

The current consumption is measured when the device is in Deep Sleep RAM mode; It consumes 8.2 µA at VBAT, 65 nA at VDDIO as shown in Figure 25, which is significantly lower than Active mode.

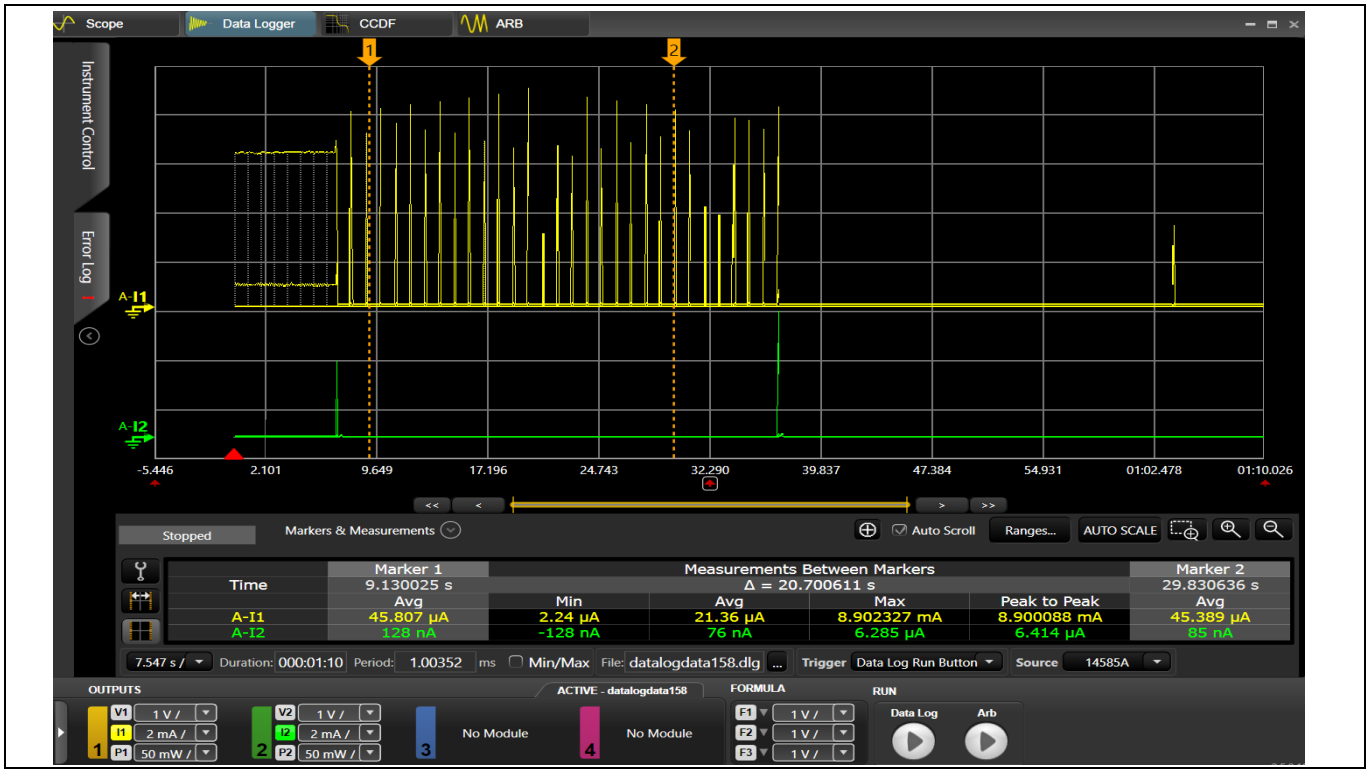

Figure 24 Deep Sleep RAM connection idle with 1 s connection interval



Figure 25 Deep Sleep RAM disconnection idle

6.2.4 Hibernate mode



Figure 26 Hibernate current

6.3 Measured current readings for various power modes

Table 8 Average current readings with connection for a time period of 20 s with PILO

Connection idle with 1 s connection interval

Power rails	Sleep	Deep Sleep	Deep Sleep RAM	Hibernate
VBAT	2.37 mA	21.7 µA	21.36µA	NA
VDDIO	12.41 µA	78 nA	76 nA	NA

Table 9 Average current readings without connection for a time period of 20 s with PILO

Disconnection idle

Power rails	Sleep	Deep Sleep	Deep Sleep RAM	Hibernate
VBAT	2.36 mA	8.23 µA	8.2 µA	2.68 µA
VDDIO	12.4 µA	67 nA	65 nA	64 nA

References

Contact Infineon Support to obtain these documents.

[1] Code examples

- Visit Code examples for ModusToolbox™ software page for a comprehensive collection of code examples.

[2] Device documentation

- CYW89829 datasheet

[3] Development kits

- CYW989829M2EVK-01 Kit user guide

[4] Tool documentation

- Eclipse IDE for ModusToolbox™ - The Infineon IDE for IoT designers

[5] Arm® documentation

- Power Control System Architecture

Revision history

Document revision	Date	Description of changes
**	2024-03-08	Initial release

Trademarks
All referenced product or service names and trademarks are the property of their respective owners.

Edition 2024-03-08

Published by

Infineon Technologies AG

81726 Munich, Germany

© 2024 Infineon Technologies AG. All Rights Reserved.

Do you have a question about this document?

Email: erratum@infineon.com

Document reference

002-39480 Rev. **

Important notice

The information contained in this application note is given as a hint for the implementation of the product only and shall in no event be regarded as a description or warranty of a certain functionality, condition or quality of the product. Before implementation of the product, the recipient of this application note must verify any function and other technical information given herein in the real application. Infineon Technologies hereby disclaims any and all warranties and liabilities of any kind (including without limitation warranties of non-infringement of intellectual property rights of any third party) with respect to any and all information given in this application note.

The data contained in this document is exclusively intended for technically trained staff. It is the responsibility of customer's technical departments to evaluate the suitability of the product for the intended application and the completeness of the product information given in this document with respect to such application.

Warnings

Due to technical requirements products may contain dangerous substances. For information on the types in question please contact your nearest Infineon Technologies office.

Except as otherwise explicitly approved by Infineon Technologies in a written document signed by authorized representatives of Infineon Technologies, Infineon Technologies' products may not be used in any applications where a failure of the product or any consequences of the use thereof can reasonably be expected to result in personal injury.