Please note that Cypress is an Infineon Technologies Company.
The document following this cover page is marked as “Cypress” document as this is the company that originally developed the product. Please note that Infineon will continue to offer the product to new and existing customers as part of the Infineon product portfolio.

Continuity of document content
The fact that Infineon offers the following product as part of the Infineon product portfolio does not lead to any changes to this document. Future revisions will occur when appropriate, and any changes will be set out on the document history page.

Continuity of ordering part numbers
Infineon continues to support existing part numbers. Please continue to use the ordering part numbers listed in the datasheet for ordering.



THIS SPEC IS OBSOLETE

Spec No: 001-15226

Spec Title: CONSUMER/INDUSTRIAL - VOICE PLAYER WITH ADPCM DECODER - AN2388

Sunset Owner: Pushek Madaan (PMAD)

Replaced by: None

Consumer/Industrial - Voice Player with ADPCM Decoder

AN2388

Author: Ruslan Bachinskyy
Associated Project: Yes
Associated Part Family: CY8C24794, CY8C24894
Software Version: PSoC® Designer™ 5.1 SP1.1
Associated Application Notes: None

OBSOLETE

Application Note Abstract

You can design a device that plays a voice recording downloaded to the external flash memory through a USB interface. This design uses adaptive differential pulse-code modulation (ADPCM) for sound compression.

Introduction

Voice players are widely used in systems with voice notification (such as modern PC motherboards, control systems, industrial and medical equipment, and children's toys).

This device is simple, inexpensive, requires a minimum number of external components, and can be used in various systems. Voice data is downloaded to the device from a PC through a USB interface. Table 1 contains the main device characteristics.

Table 1. Device Characteristics

Item	Value
Power Supply Voltage	9 V – 12 V
Communication Interface	USB
Input Audio File Bits/Sample	16
Input Audio File Sample Rate	8 kHz
ADPCM Bits/Sample	4
Maximum Duration of the Sound	2 minutes
Flash Memory Capacity	4 Mbits
Flash Memory Writing Time	40 s

ADPCM Coding

An adaptive differential pulse-code modulation (ADPCM) algorithm is used for voice signal compression. This algorithm uses predictive techniques to calculate an estimate of what the next sample will be, and then stores the difference between the actual sample value and the predicted value.

If the prediction is accurate, the difference between the predicted value and the actual value is very small, so the space required to store it is also small.

The coder and decoder use the same algorithms, so the signal can be recreated from the series of stored differences.

Most ADPCM algorithms are computationally complex and use floating-point arithmetic. G.721 is one such algorithm. You can read more about G.721 on the International Telecommunication Union website. This algorithm cannot be realized on an 8-bit microcontroller because of its complexity. Other techniques are used on microcontrollers.

The example in this application note uses a simplified version of an ADPCM algorithm. This version converts 16-bit samples to 4-bit codes.

Device Operation

Figure 1 shows a block diagram of the voice player. The device consists of the following components:

- A PSoC® device
- Flash memory for voice storage
- An amplifier
- A speaker
- A play button

The PSoC device receives ADPCM-compressed voice data from the PC through USB and writes the data to external flash memory. When you press the **Play** button, the PSoC device begins decoding the ADPCM compressed data and sends the resulting voice samples to the amplifier.

The PSoC CPU communicates with external flash memory using the SPI Master (SPIM) User Module. It also reads and writes ADPCM codes, and converts ADPCM codes to voice samples.

The pseudo-random sequence (PRS) PWM is implemented with the PRS16 User Module, a pseudo-random sequence generator. The PRS PWM obtains the samples and

generates pulse sequences with a duty cycle that corresponds to the voice sample value. The PRS16 User Module was chosen because the signal spectrum generated by the PRS PWM is wider than the signal spectrum generated by a counter-based PWM.

The wider signal spectrum simplifies filtering. The PRS PWM provides a 12-bit resolution output signal that is more than sufficient for this application.

The passive R_3C_4 low-pass filter (LPF) removes the high-frequency components generated by the PRS PWM.

The filter output signal is routed to a PGA User Module configured as a unity gain buffer. The PGA output is routed to the LPF2 User Module configured as a four-pole Butterworth LPF (LPF4) with a cut-off frequency of 4 kHz. This suppresses voice sample frequency spectrum components.

The audio amplifier boosts the voice signal for the 8-ohm speaker that plays the voice.

Figure 1. Voice Player Block Diagram

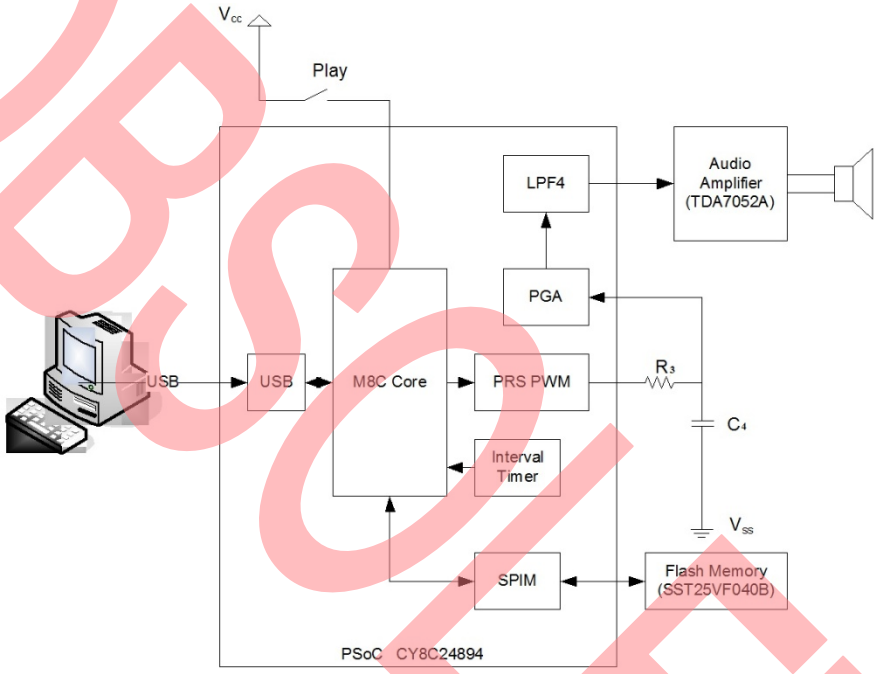

OBSOLETE

Device Schematic

A schematic of the voice player is shown in Figure 2. Device components and their functions are as follows:

- U1 – External Flash memory
- U2 – PSoC
- U3 – Audio amplifier
- U4 – 3.3 V linear voltage regulator
- J3 – ISSP connector for PSoC programming
- R4 – Volume regulator

Figure 2. Voice Player Schematic

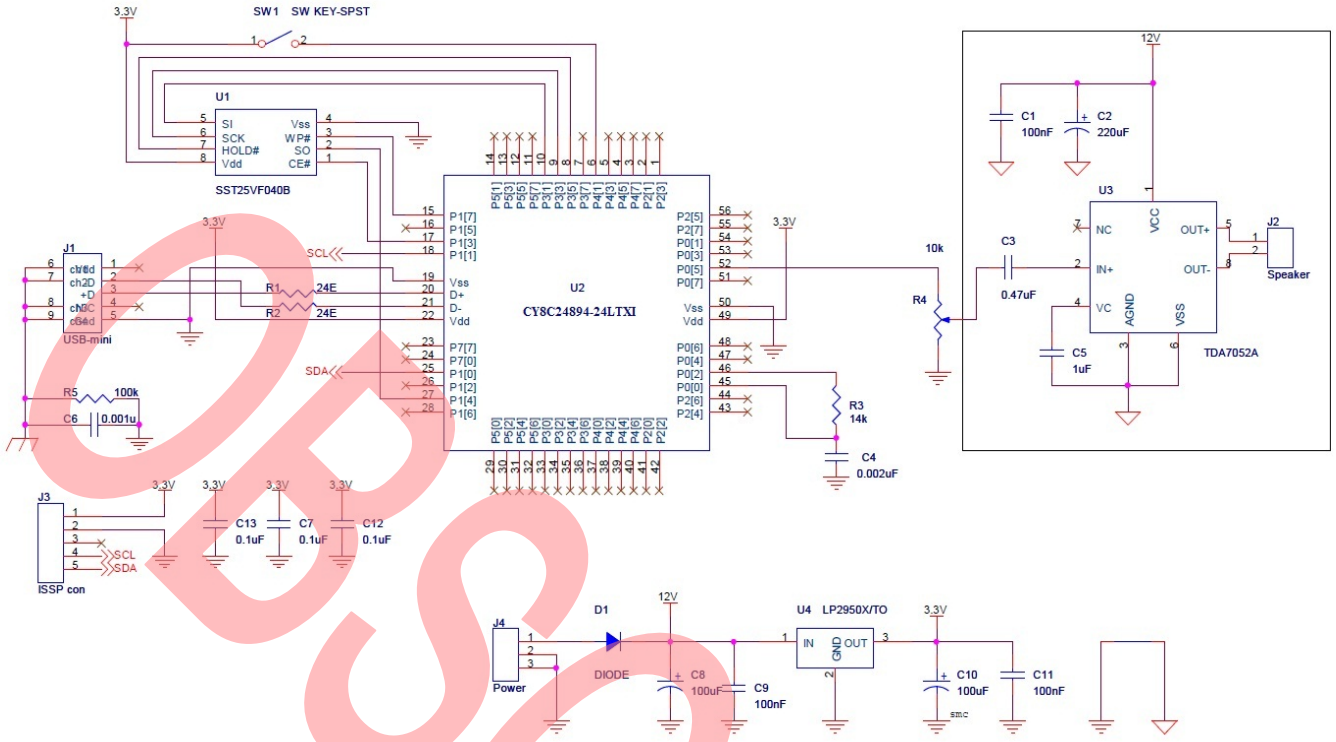

PC Application

The PC communicates with the device through a USB interface. A special PC application converts input .WAV files to ADPCM codes and transmits the ADPCM data to the device.

A view of the PC application screen is shown in Figure 3. The **USB Voice Device list** shows all voice players connected to the PC. Choose any active voice player from the list to interact with that device. Select a *.WAV* file from the **Source file** field to download the file to the device.

The *.WAV* file must be a resource interchange file format (RIFF) file that contains a 16-bit sample (1 or 2 channels) with an 8-kHz sample rate. If you want to reconstruct the .WAV file from the resulting ADPCM file, select the **Create decoded wav file** check box. The name of the reconstructed file will be `source_file_name_recovered.wav`. You can listen to this file on the PC without downloading it to the voice player. The ADPCM file name is `source_file_name.adpcm`. This file is transmitted to the voice player using USB.

Figure 3. PC Application View

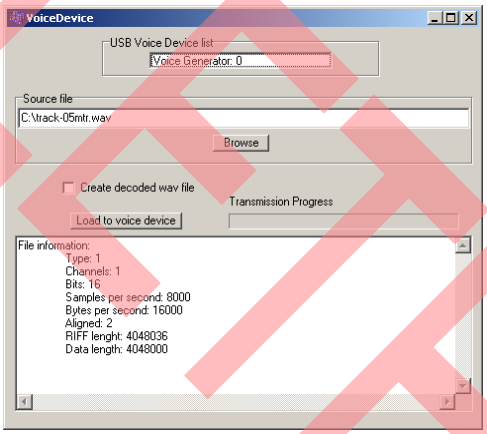

OBSOLETE

System Photo

A top view of the PC board is shown in Figure 4. Figure 5 shows a bottom view.

Figure 4. PCB Top View

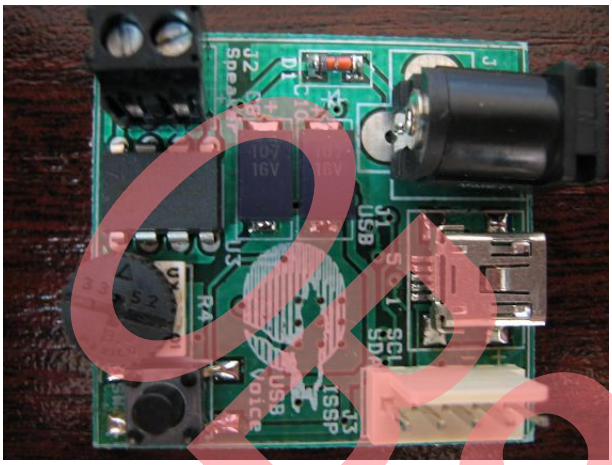

Figure 5. PCB Bottom View

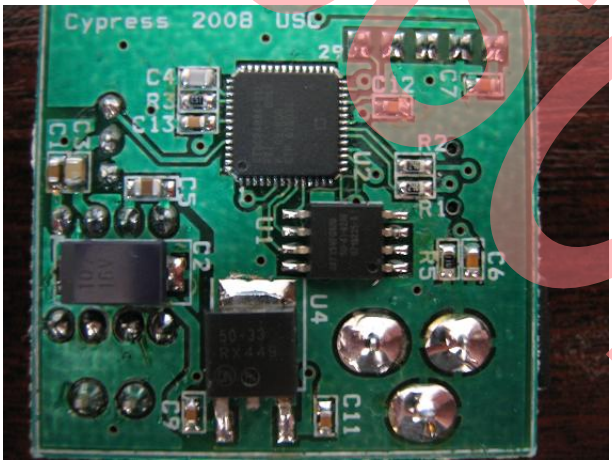

Conclusion

You can use this inexpensive voice player with an ADPCM decoder in voice notification systems by adding a simple command interface that allows you to play different files in response to commands.

About the Author

Name: Ruslan Bachinskyy
Title: Postgraduate Student
Background: Ruslan earned a Master's degree in Specialized Computer Systems in 1999 from National University "Lvivska Polytechnika" (Ukraine), and works as an Application Engineer for Cypress Semiconductor Corp. His interests include embedded systems design including various processors, operating systems, and target applications.

Contact: bacr_ukr@cypress.com

OBSOLETE

Document History

Document Title: Consumer/Industrial - Voice Player with ADPCM Decoder – AN2388

Document Number: 001-15226

Revision	ECN	Orig. of Change	Submission Date	Description of Change
**	1058621	XSG	07/29/2007	New Spec.
*A	2521342	RLRM	08/26/2008	Updated to new template.
*B	2768059	RLRM	09/23/2009	Updated to PSoC Designer 5.0.
*C	3319384	ANBI_UKR	07/18/2011	Updated to latest template. Updated to latest PSoC Designer.
*D	4453271	PMAD	07/22/2014	Obsolete document. Completing Sunset Review.

OBSOLETE

In March of 2007, Cypress re-cataloged all of its Application Notes using a new documentation number and revision code. This new documentation number and revision code (001-xxxxx, beginning with rev. **), located in the footer of the document, will be used in all subsequent revisions.

PSoC is a registered trademark of Cypress Semiconductor Corp. "Programmable System-on-Chip," and PSoC Designer are trademarks of Cypress Semiconductor Corp. All other trademarks or registered trademarks referenced herein are the property of their respective owners.

Cypress Semiconductor
198 Champion Court
San Jose, CA 95134-1709
Phone: 408-943-2600
Fax: 408-943-4730
http://www.cypress.com/

© Cypress Semiconductor Corporation, 2007-2014. The information contained herein is subject to change without notice. Cypress Semiconductor Corporation assumes no responsibility for the use of any circuitry other than circuitry embodied in a Cypress product. Nor does it convey or imply any license under patent or other rights. Cypress products are not warranted nor intended to be used for medical, life support, life saving, critical control or safety applications, unless pursuant to an express written agreement with Cypress. Furthermore, Cypress does not authorize its products for use as critical components in life-support systems where a malfunction or failure may reasonably be expected to result in significant injury to the user. The inclusion of Cypress products in life-support systems application implies that the manufacturer assumes all risk of such use and in doing so indemnifies Cypress against all charges.

This Source Code (software and/or firmware) is owned by Cypress Semiconductor Corporation (Cypress) and is protected by and subject to worldwide patent protection (United States and foreign), United States copyright laws and international treaty provisions. Cypress hereby grants to licensee a personal, non-exclusive, non-transferable license to copy, use, modify, create derivative works of, and compile the Cypress Source Code and derivative works for the sole purpose of creating custom software and or firmware in support of licensee product to be used only in conjunction with a Cypress integrated circuit as specified in the applicable agreement. Any reproduction, modification, translation, compilation, or representation of this Source Code except as specified above is prohibited without the express written permission of Cypress.

Disclaimer: CYPRESS MAKES NO WARRANTY OF ANY KIND, EXPRESS OR IMPLIED, WITH REGARD TO THIS MATERIAL, INCLUDING, BUT NOT LIMITED TO, THE IMPLIED WARRANTIES OF MERCHANTABILITY AND FITNESS FOR A PARTICULAR PURPOSE. Cypress reserves the right to make changes without further notice to the materials described herein. Cypress does not assume any liability arising out of the application or use of any product or circuit described herein. Cypress does not authorize its products for use as critical components in life-support systems where a malfunction or failure may reasonably be expected to result in significant injury to the user. The inclusion of Cypress' product in a life-support systems application implies that the manufacturer assumes all risk of such use and in doing so indemnifies Cypress against all charges.

Use may be limited by and subject to the applicable Cypress software license agreement.