Please note that Cypress is an Infineon Technologies Company.
The document following this cover page is marked as “Cypress” document as this is the company that originally developed the product. Please note that Infineon will continue to offer the product to new and existing customers as part of the Infineon product portfolio.

Continuity of document content
The fact that Infineon offers the following product as part of the Infineon product portfolio does not lead to any changes to this document. Future revisions will occur when appropriate, and any changes will be set out on the document history page.

Continuity of ordering part numbers
Infineon continues to support existing part numbers. Please continue to use the ordering part numbers listed in the datasheet for ordering.

THIS SPEC IS OBSOLETE

Spec No: 001-25619

Spec Title: POWER MANAGEMENT - INCREASING OUTPUT POWER OF A SWITCH MODE PUMP - AN2349

Sunset Owner: M Ganesh Raaja (GRAA)

Replaced by: 001-94769

AN2349

Power Management - Increasing Output Power of a Switch Mode Pump

Author: Vadym Grygorenko

Associated Project: No

Associated Part Family: CY8C21xxx, CY8C24x23A, CY8C27x43, CY8C29xxx

Software Version: PSoC® Designer™ 5.1 SP1.1

Related Application Notes: AN2097

AN2349 demonstrates how to increase the output current of the PSoC's switch mode pump (SMP) up to 500 mA. Such an application can be used in battery-powered devices that require a short-time, high-power load.

OBSOLETE

Introduction

Most PSoC devices are equipped with a switch mode pump (SMP). This allows for developers to design low voltage, battery-powered applications. The advantages of this internal SMP are that it is easy to implement and uses minimal number of external components. By default, the SMP only requires an external coil and diode. The main disadvantage of the internal SMP circuit is low output power. In most cases, the SMP can drive only a 50-70 mA load current. This value might not be enough for many applications. Examples of such applications include remote alarm systems, power LED drivers, wireless USB transmitters, and so on.

There is another disadvantage to the internal SMP: it can produce disturbances on the Vss line. These disturbances are caused by relatively high current pulses through the internal SMP switch (see Figure 1 and Figure 2). That is why it is recommended to turn off the SMP during precision measurements. (For further details, see the *PSoC Technical Reference Manual (TRM)*).

A simple solution to increase SMP output power and minimize current ripples on the Vss line is described in this application note.

Operation Description

The internal structure of the PSoC's SMP is shown in Figure 1.

Figure 1. SMP Structure

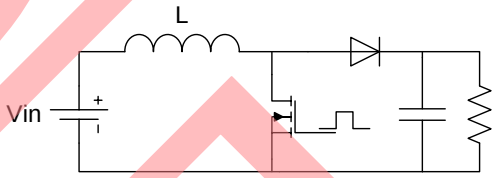

This is a classic step-up (boost) converter. It is described in detail in application note AN2097. According to AN2097, the maximum load current is limited due to the relatively high value of the internal switch resistance, which is about 8 Ω (typical value).

The technique to increase load current is to employ an external MOSFET switch instead of an internal one. Unfortunately, the PSoC does not have an output pin to drive an external switch. The existing SMP pin cannot be directly connected to the external switch's gate. That is because of the inverted control sequence on the SMP pin: the active level on the SMP pin is low, whereas the switch must be driven by a high active level.

An external inverter can be used to adjust levels. The proposed device block schematic is shown in Figure 2.

Figure 2. Modified SMP Block Schematic

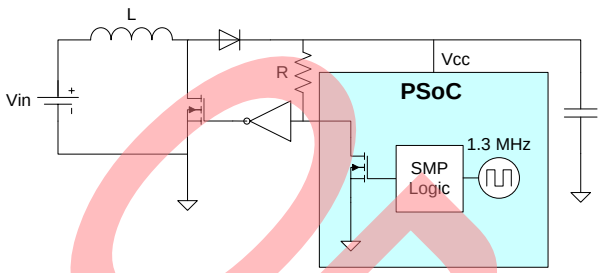

The SMP has a fixed frequency of about 1.3 MHz and duty cycle of 50%. This makes it difficult to get an output voltage that is higher than two times the input voltage. Let us consider this in detail.

A boost converter can operate in two conduction modes: continuous and discontinuous. The operation mode depends on whether the inductor current drops to zero during the switch off-time or not. In discontinuous mode, the output voltage is not limited. However, current ripples in the coil are relatively large. For example, given an input voltage of 2 V, an output voltage of 5 V and a load current of 0.5 A, the maximum current in the coil will be about 2.5 A. Such large current ripples are undesirable because they can cause electromagnetic interference.

For continuous mode, the current ripples can be small. Output voltage is dependent on the duty cycle and the input voltage; it is independent of the load as shown in Equation 1:

$$V_{out} = \frac{V_{in}}{1-D}, \qquad \text{Equation 1}$$

D is duty cycle. If the duty cycle is fixed to 0.5, then the output voltage cannot be greater than two times the input voltage. This limitation is not acceptable for battery-powered applications that require 5 V output voltage with < 2 V input voltage. In order to overcome this limitation a special effort has been made to increase the duty cycle on the switching MOSFET. This is achieved by wisely choosing the value for resistor, R. If this value is relatively high, the rising edge on the SMP pin slows due to the internal transistor's capacitance. As a result, the duty cycle of the pulses that drives the switch increases, allowing operation on low input voltages.

The technique described here is shown in Figure 3. The upper waveform is the SMP pin output voltage. The resulting waveform on the drain of the switching MOSFET is presented at the bottom of Figure 3. In this waveform, a low level corresponds to the ON state of the switch and a high level corresponds to the OFF state. It is easy to calculate that the obtained duty cycle is about 0.7.

Figure 3. Waveforms on SMP-Pin (Upper), MOSFET Drain (Lower)

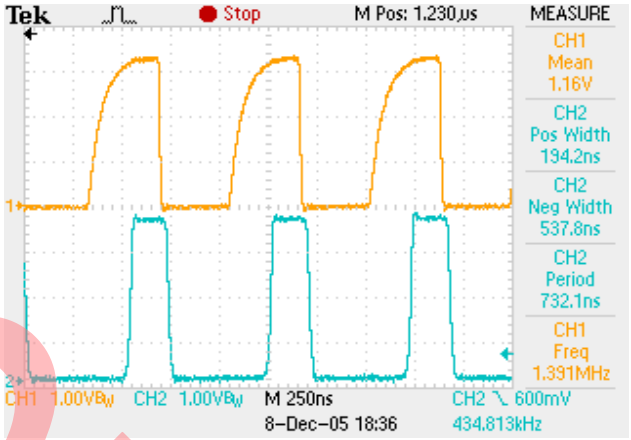

Performance Test Results

To test the proposed SMP, a simple test board was created. The full-board schematic is shown in Figure 4. The input voltage is applied to jumper J1; the output load is connected to J2. The input voltage and current are measured using test points TP1 and TP2; the corresponding output values are monitored on TP3 and TP4.

OBSOLETE

Figure 4. Modified SMP Test Board Schematic

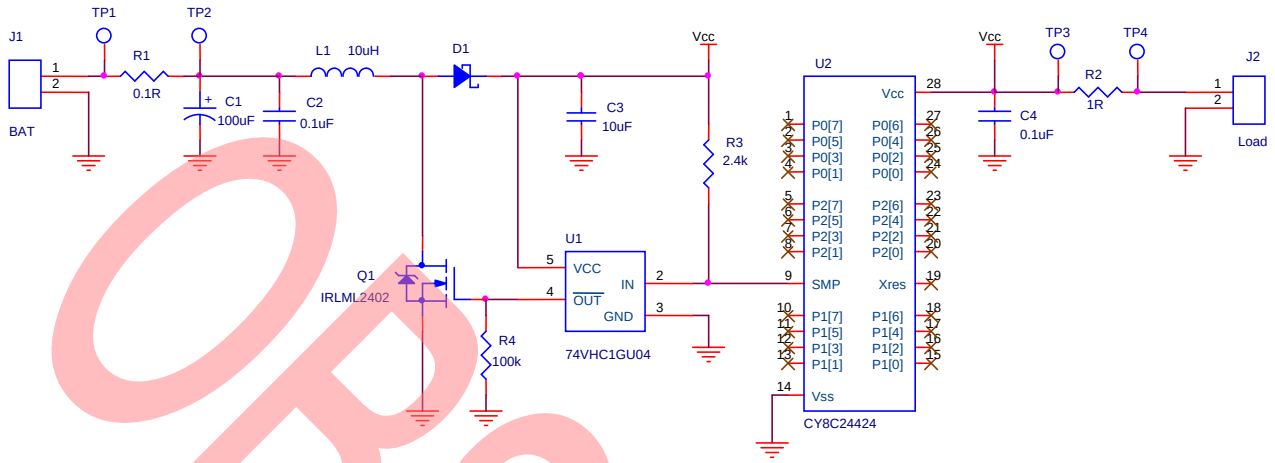

The tests are performed for 5-V and 3.3-V output voltages with different load current and input voltages. The startup stability and SMP efficiency were estimated.

The main test results are:

- SMP operation is stable with input voltages higher than 1.7 V and output current up to 0.5 A.
- Only when V_{cc} = 5 V and output current is 0.5 A, should the input voltage be increased to 2 V for stable start up.
- The efficiency value of the SMP is typical for boost converters and lies between about 0.7 and 0.8 for load currents between 50 mA and 500 mA.

Figure 5 presents a typical input voltage-efficiency relationship for a load current of 100 mA. Similar behavior is observed for other load current values and output voltages.

Figure 5. Input Voltage-Efficiency Relationship Sample

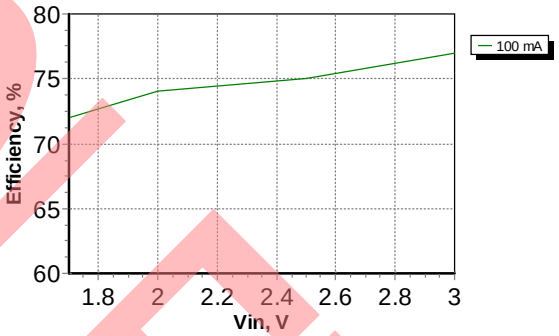

The presented test results prove the possibility of using a modified SMP to power different devices with load currents up to 0.5 A using two battery cells.

Summary

This application note demonstrates the method of increasing the output current of PSoC's switch mode pump.

References

1. R.W. Erickson. "Fundamentals of Power Electronics." New York: Chapman and Hall, May 1997.

About the Author

Name: Vadym Grygorenko.

Title: Systems Engrg Sr MTS

OBSOLETE

Document History

Document Title: Power Management - Increasing Output Power of a Switch Mode Pump - AN2349

Document Number: 001-25619

Revision	ECN	Orig. of Change	Submission Date	Description of Change
**	1444963	JVY	09/07/2007	New application note.
*A	3030532	DASG	09/15/2010	Removed reference to CY8C24x94 from Associated Part Families on page 1. Corrected cross-references to figures. Added Summary. Added Document History.
*B	3305112	ANBI_UKR	07/07/2011	Updated software version.
*C	4496093	GRAA	10/20/2014	Obsolete document. Completing Sunset Review.

OBSOLETE

Worldwide Sales and Design Support

Cypress maintains a worldwide network of offices, solution centers, manufacturer's representatives, and distributors. To find the office closest to you, visit us at Cypress Locations.

Products

Automotive	cypress.com/go/automotive
Clocks & Buffers	cypress.com/go/clocks
Interface	cypress.com/go/interface
Lighting & Power Control	cypress.com/go/powerpsoc cypress.com/go/plc
Memory	cypress.com/go/memory
PSoC	cypress.com/go/psoc
Touch Sensing	cypress.com/go/touch
USB Controllers	cypress.com/go/usb
Wireless/RF	cypress.com/go/wireless

PSoC® Solutions

psoc.cypress.com/solutions

PSoC 1 | PSoC 3 | PSoC 4 | PSoC 5LP

Cypress Developer Community

Community | Forums | Blogs | Video | Training

Technical Support

cypress.com/go/support

OBSOLETE

PSoC is a registered trademark of Cypress Semiconductor Corp. PSoC Designer is a trademark of Cypress Semiconductor Corp. All other trademarks or registered trademarks referenced herein are the property of their respective owners.

Cypress Semiconductor
198 Champion Court
San Jose, CA 95134-1709

Phone : 408-943-2600
Fax : 408-943-4730
Website : www.cypress.com

© Cypress Semiconductor Corporation, 2007-2014. The information contained herein is subject to change without notice. Cypress Semiconductor Corporation assumes no responsibility for the use of any circuitry other than circuitry embodied in a Cypress product. Nor does it convey or imply any license under patent or other rights. Cypress products are not warranted nor intended to be used for medical, life support, life saving, critical control or safety applications, unless pursuant to an express written agreement with Cypress. Furthermore, Cypress does not authorize its products for use as critical components in life-support systems where a malfunction or failure may reasonably be expected to result in significant injury to the user. The inclusion of Cypress products in life-support systems application implies that the manufacturer assumes all risk of such use and in doing so indemnifies Cypress against all charges.
This Source Code (software and/or firmware) is owned by Cypress Semiconductor Corporation (Cypress) and is protected by and subject to worldwide patent protection (United States and foreign), United States copyright laws and international treaty provisions. Cypress hereby grants to licensee a personal, non-exclusive, non-transferable license to copy, use, modify, create derivative works of, and compile the Cypress Source Code and derivative works for the sole purpose of creating custom software and or firmware in support of licensee product to be used only in conjunction with a Cypress integrated circuit as specified in the applicable agreement. Any reproduction, modification, translation, compilation, or representation of this Source Code except as specified above is prohibited without the express written permission of Cypress.
Disclaimer: CYPRESS MAKES NO WARRANTY OF ANY KIND, EXPRESS OR IMPLIED, WITH REGARD TO THIS MATERIAL, INCLUDING, BUT NOT LIMITED TO, THE IMPLIED WARRANTIES OF MERCHANTABILITY AND FITNESS FOR A PARTICULAR PURPOSE. Cypress reserves the right to make changes without further notice to the materials described herein. Cypress does not assume any liability arising out of the application or use of any product or circuit described herein. Cypress does not authorize its products for use as critical components in life-support systems where a malfunction or failure may reasonably be expected to result in significant injury to the user. The inclusion of Cypress' product in a life-support systems application implies that the manufacturer assumes all risk of such use and in doing so indemnifies Cypress against all charges.
Use may be limited by and subject to the applicable Cypress software license agreement.