**Please note that Cypress is an Infineon Technologies Company.**
The document following this cover page is marked as “Cypress” document as this is the company that originally developed the product. Please note that Infineon will continue to offer the product to new and existing customers as part of the Infineon product portfolio.

**Continuity of document content**
The fact that Infineon offers the following product as part of the Infineon product portfolio does not lead to any changes to this document. Future revisions will occur when appropriate, and any changes will be set out on the document history page.

**Continuity of ordering part numbers**
Infineon continues to support existing part numbers. Please continue to use the ordering part numbers listed in the datasheet for ordering.

# THIS SPEC IS OBSOLETE

Spec No: 001-15234

Spec Title: TILT-COMPENSATED DIGITAL MAGNETIC COMPASS WITH BUILT-IN TEMPERATURE SENSOR, OLED GRAPHICS DISPLAY - AN2348

Sunset Owner: M Ganesh Raaja (GRAA)

Replaced by: 001-32379

# Tilt-Compensated Digital Magnetic Compass with Built-In Temperature Sensor, OLED Graphics Display

# AN2348

**Author**: Vadym Grygorenko and Valeriy Kyrynyuk
**Associated Project**: Yes
**Associated Part Family**: CY8C29x66
**Software Version**: PSoC® Designer™ 5.1 SP1.1
**Associated Application Notes**: AN2267, AN2272, AN2314, AN2356
PSoC Application Notes Index

## Abstract

AN2348 describes a digital three-axis magnetic compass with external temperature sensor and OLED graphics display. The described application provides a comfortable user interface with advanced functionality. This note explains all new features when compared to the compass application presented in AN2272 "Magnetic Compass with Tilt Compensation."

## Introduction

In today's technology-based marketplace, customers look for multifunctional devices with an attractive interface as much as they look for low cost. The compass built in this Application Note is both attractive and low cost and expands the application already published in AN2272, "Magnetic Compass with Tilt Compensation."

The monochrome OLED (organic light emitting diode) display by OSRAM Opto Semiconductors (http://www.pictiva.com) was used to implement the graphical interface. This display has a thin-form factor, low power consumption, a wide viewing angle and a broad temperature operating range. The display does not need additional backlight elements, because it is based on OLED technology. This OLED display has 16 levels of brightness of each base color. This display also has a built-in driver for LED matrix control with parallel or serial interface options.

## Graphics Interface of Compass

The compass has three main display screens and four additional service screens. The three main screens are:

- Direction and temperature (Figure 1)
- Magnetic sensor and accelerometer values (Figure 2)
- Temperature sensing values (Figure 7)

Figure 1. Direction and Temperature




Figure 2. Magnetic Sensor and Accelerometer Values

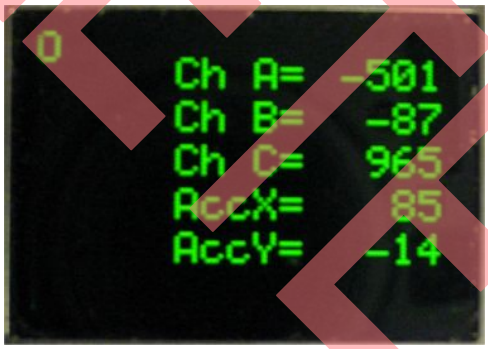


OBSOLETE

The four service screens display the following information:

- Calibration of magnetic sensor's X/Y axes (removing influence from soft and hard iron)
- Correction of true north
- Change in brightness
- Calibration of accelerometer

There are two buttons implemented into the design. These are all that is needed to operate the compass. The photo in Appendix B shows the buttons. Table 1 describes button functions.

Table 1. Description of Buttons

| Button | Function |
|---|---|
| UNIT (s.) | Switch between US/Metric units. |
| STEP (s.) | Return to compass/temperature mode. |
| STEP (l.) | Switch screen mode. There are four screen modes: compass/temperature, magnetic sensor measured value, accelerometer-temperature sensing values, and blank screen. |
| STEP+UNIT (l.) | Switch to setup/calibration screen mode. There are four modes: **calibrate** X/Y axes (remove soft and hard iron distortion), set **variation** value (true north correction), set **brightness** value, and **calibrate accelerometer** sensor. |

**LEGEND**

Long press (l.): Press and hold more than 0.6s.
Short press (s.): Press and hold less than 0.3s.

The functions of the STEP+UNIT button are as follows:

**Calibration** of the magnetic sensor's X/Y axes is needed to remove influence of soft and hard iron near sensors (in, for example, a car). This can be accomplished with the compass by mechanically rotating the sensors in the X/Y plane two times or by using a magnetic field simulator. One turn period is 10-15s. During calibration, the compass identifies the minimum and maximum value of the X and Y axes and indicates this value on the display. To store the current calibration, press the "STEP" button. To reject calibration, press the "UNIT" button. In the second case, the compass will continue to work with the old calibration coefficients.

The **variation** value is used for true north correction. Press the "STEP" button to change this value. Press the "UNIT" button to save the new value and exit.

The **brightness** value changes the brightness of the compass pointer and directional references. There are eight levels of brightness. Press the "STEP" button to change the value. Press the "UNIT" button to save new value and to exit.

Figure 3. Brightness Setup Screen




**Calibration of the accelerometer** is necessary for proper operation of tilt compensation. During this calibration, the compass board must be turned twice around two axes (about 5s per turn), which are normal to the Earth's magnetic field vector (Figure 4).

OBSOLETE

Figure 4. Accelerometer Calibration

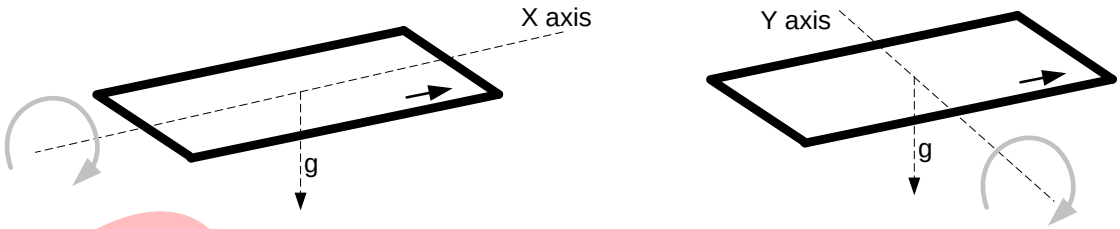


## Temperature Sensing

As previously described, the digital magnetic compass application includes external temperature sensing. The temperature is measured using the method described in Application Notes AN2267, "Single Cell Li-Ion Battery Charger" and AN2314 "Thermistor-Based Temperature Measurement in Battery Packs."

Temperature measurement is implemented using Temperature Sensor, RT1. The voltage-drop measurement is done by applying two different voltages in series to the resistive path of the temperature sensor. First, voltage is created by setting a logic high value on the TEMP_V1 wire.

Figure 5. Sampling of $V_{t1}$

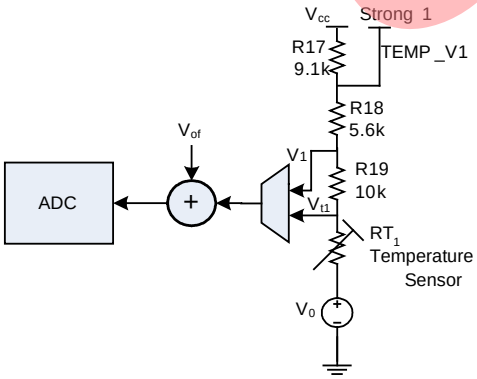


Second, voltage on the temperature sensor resistor forms when the TEMP_V1 stays in High Z drive mode.

Figure 6. Sampling of $V_{t2}$

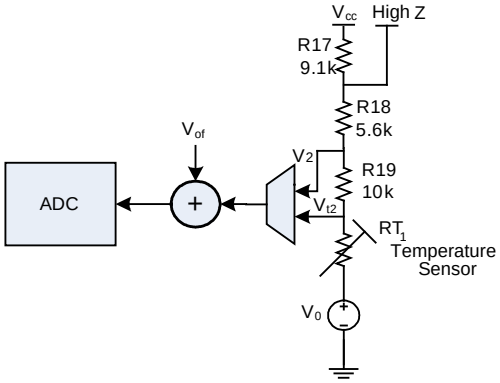


To measure temperature, all four voltages: $V_1$, $V_2$, $V_{t1}$ and $V_{t2}$, must be measured. This technique allows compensation for various offset voltages including the ADC, PGA and ground potential. See more of a similar method in AN2314. Equation (1) illustrates how this technique works.

$$V_{t1} = V_0 + V_{of} + \frac{Rt_1}{R_{19} + Rt_1}(V_1 - V_0);$$

$$V_{t2} = V_0 + V_{of} + \frac{Rt_1}{R_{19} + Rt_1}(V_2 - V_0); \quad (1)$$

$$\frac{Rt_1}{R_{19} + Rt_1} = \frac{(V_{t1} - V_{t2})}{(V_1 - V_2)}.$$

$$Rt_1 = \frac{(V_{t1} - V_{t2})R_{19}}{(V_1 - V_2) - (V_{t1} - V_{t2})}$$

- $V_1$ and $V_2$ voltages are measured in $V$ point when switch TEMP_V1 is turned ON and turned OFF accordingly.
- $V_{t1}$ and $V_{t2}$ voltages are measured from the temperature sensor resistor when $V_1$ and $V_2$ are applied accordingly.
- $V_{of}$ and $V_0$ are offset voltages.
- $Rt_1$ is the temperature sensor resistance.

The temperature sensing algorithm is located in the **GetT()** function in the project files associated with this Application Note. The value for $Rt_1$ is computed as an integer, therefore it is calculated in the following way:

$$Rt_1 = \frac{(V_{t1} - V_{t2}) \cdot 1024}{(V_1 - V_2) - (V_{t1} - V_{t2})} \quad (2)$$

The $Rt_1$ is a unit-less value and can be used only to indicate the level of temperature sensor resistance. Scaling Equation (3) turns the unit-less $Rt_1$ value into the temperature value $T_{new}$ using linear transformation:

OBSOLETE

$$T_{new} = \frac{Rt \cdot iT_1}{1024} + iT_0 \quad (3)$$

- $iT_1$ is the scaling coefficient.
- $iT_0$ is the offset coefficient.
- $T_{new}$ is the temperature, 0.1°C.

This equation is correct only for sensors with linear characteristics, such as RTD-type sensors, similar to the one used in this application.

Finally, the temperature value is calculated by Equation (4), using a first-order IIR filter:

$$T = \frac{1}{4}T_{new} + \frac{3}{4}T \quad (4)$$

Equation (4) is used to decrease the effect of the noise introduced to the temperature value by the sensor wire and PSoC amplifiers.

The temperature-sensing screen displays several values, which are needed to run the calibration procedure and test temperature measurements (see Figure 7). These values include:

- Measured temperature
- Unit-less $Rt_1$ parameter
- $V_{t2}$ parameter
- $V_2$ parameter
- $V_{t1}$ parameter
- $V_1$ parameter

Figure 7. Temperature Values

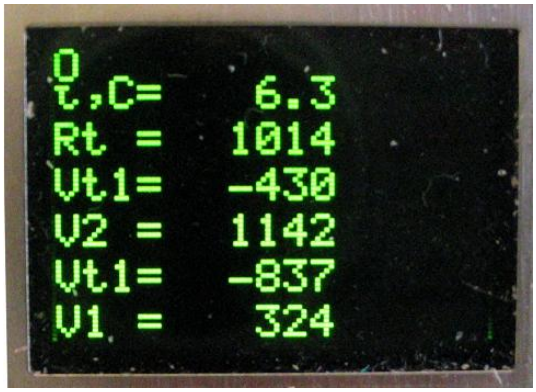


For non-linear sensors, the temperature calculation can be realized using linear interpolation. The sensor characteristics are represented by two parameters: $Rt$ and $T$. The current range must be located first during this calculation. The current must be in this range:

$$Rt_i \le Rt \le Rt_{i+1} \quad (5)$$

$Rt_i$ and $Rt_{i+1}$ are the values of current range. The temperature value can now be calculated using the following equation:

$$T_{new} = \frac{(T_{i+1} - T_i)}{(Rt_{i+1} - Rt_i)} \bullet (Rt - Rt_i) + T_i \quad (6)$$

$T_{i+1}$, $T_i$ are the temperature values in the current range.

## Temperature Sensor Calibration Algorithm

In the case of non-linear sensors, the procedure is slightly different. The calibration coefficient needs to be identified by experiment. For non-linear sensors this routine must be modified.

To run the calibration procedure, the table of sensor characteristics (resistance (R) in kΩ, temperature (T) in Celsius) must be populated. Execute the following steps for calibration:

- Connect the resistors magazine to the temperature circuit instead of the temperature sensor.
- Set the R value that is equivalent to T minimum (-40 °C, for example). Fix $Rt_{min}$ and $T_{min}$ values.
- Set R value that is equivalent to T maximum (60 °C, for example). Fix $Rt_{max}$ and $T_{max}$ values.
- Identify calibration scaling coefficient $iT_1$ using Equation (7).
- Identify $iT_0$ calibration zero offset coefficient using Equation (8).
- Write these coefficients as constants into the project ROMDefaults parameter.
- Test several temperature points in order to obtain accurate temperature measurements.

$$iT_1 = \frac{T_{max} - T_{min}}{Rt_{max} - Rt_{min}} \cdot 10240 \quad (7)$$

$$iT_0 = T_{min} \cdot 10 - \frac{Rt_{min} \cdot iT_1}{1024} \quad (8)$$

If the temperature sensor is not linear, then a different calibration procedure should be used.

OBSOLETE

Following are recommendations for selecting the R17, R18 and R19 resistors:

- R17 in range (1.7 to 2.5)*R18
- R18≈R19≈0.5* *Rt* in the middle of scale (20 °C, for example)

Following are examples of sensor calibration:

- The $Rt_1 \approx 10$ k at 5 °C
- R18 = 5.6 k
- R17 = 10 k
- R19 = 9.1 k

Table 2. Example Temperature Sensor Characteristics

| Temperature (T) in Celsius | Resistance (R) in kΩ |
|---|---|
| -80 | 1 |
| 5 | 10 |
| 100 | 22 |

The measured value of the unit-less *Rt* parameter:

- At R = 1 kΩ (T = -80 °C), *Rt* = 104
- At R = 22 kΩ (T = 100 °C), *Rt* = 2000

So, we have the following calibration coefficients:

$$iT_1 = \frac{100-(-80)}{2000-104} \cdot 10240 = 972 \quad (9)$$

$$iT_0 = -80 \cdot 10 - \frac{104 \cdot 972}{1024} = -899 \quad (10)$$

## Schematic Description

The electrical schematic of the compass board is shown in Appendix A. The compass was developed to operate at 8-20 V, DC power supply. It operates in three different voltage ranges. The main voltage is +5 V; the OLED requires +3 V and +12 V. Another possible option uses +3 V as the main voltage. In this case, the following components are not needed: U15, U19, U20 and other passive components. This leads to a reduction in cost.

The current project is designed for LIN bus capabilities. Because the PSoC® LIN driver does not work on CPU speeds lower than 24 MHz, the power supply must be +5V in this particular case. The PSoC regulates a +12V OLED supply by enabling/disabling the PWM output and controls this voltage using a comparator built with the SCBlock User Module and a voltage divider on R24, R25. The magnetic sensors and accelerometer are connected to the PSoC in the same way as was done in AN2272. But rather than one 3-axis magnetic sensor, HMC1053, this design uses two different sensors, HMC1052 and HMC1041, to reduce cost compared to the three axis version. The HMC1052 measures the magnetic vector in the X/Y plane. The HMC1041 measures the magnetic vector in the Z-axis.

## Summary

The graphic interface and fonts required a large amount of ROM space, which determined the need for the CY8C29x66 for this design. After optimizing the program code and graphics resources, the CY8C27x43 series may become an option.

The device described can be used for vehicles, cell phones, robotics and mobile navigation systems.

OBSOLETE

# Appendix A. Device Schematic

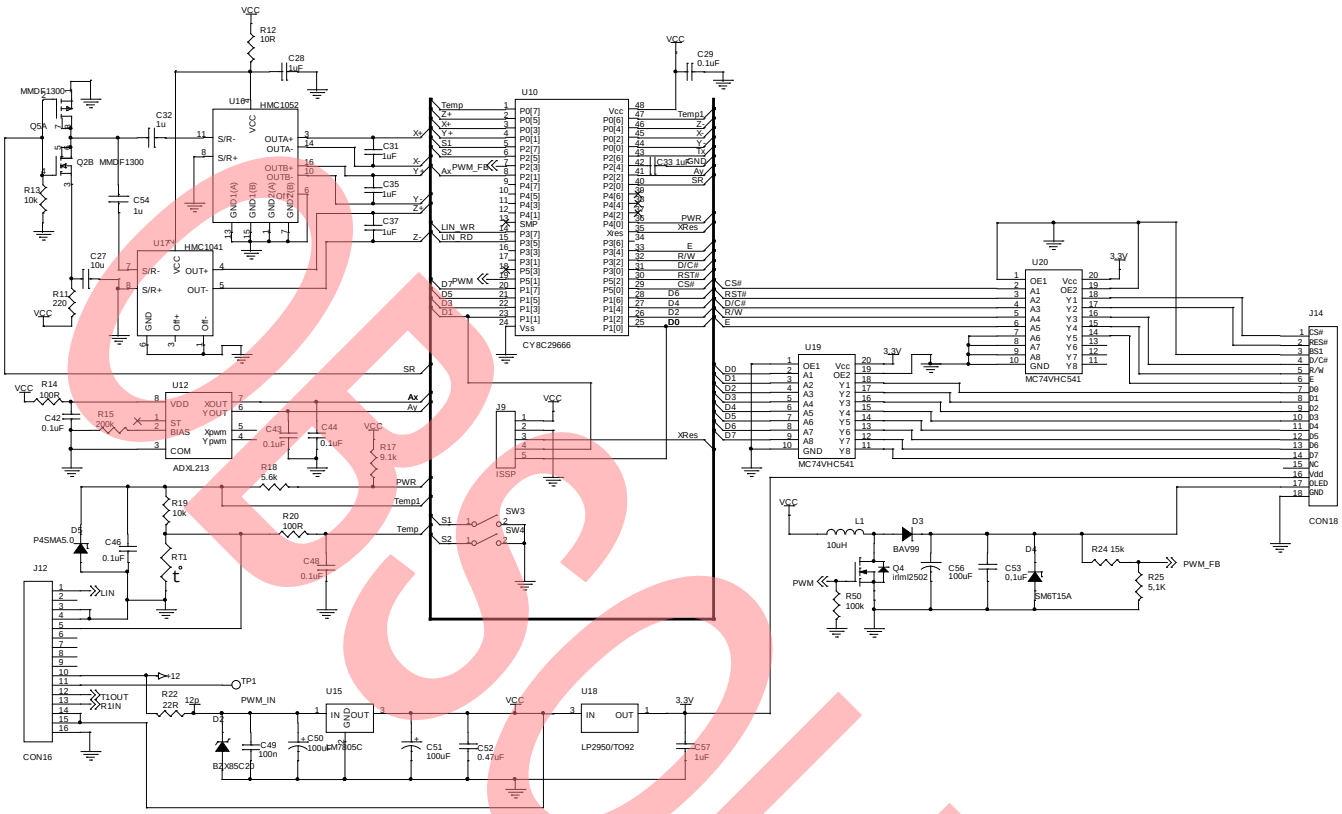


# Appendix B. Magnetic Compass Photo (Top View)

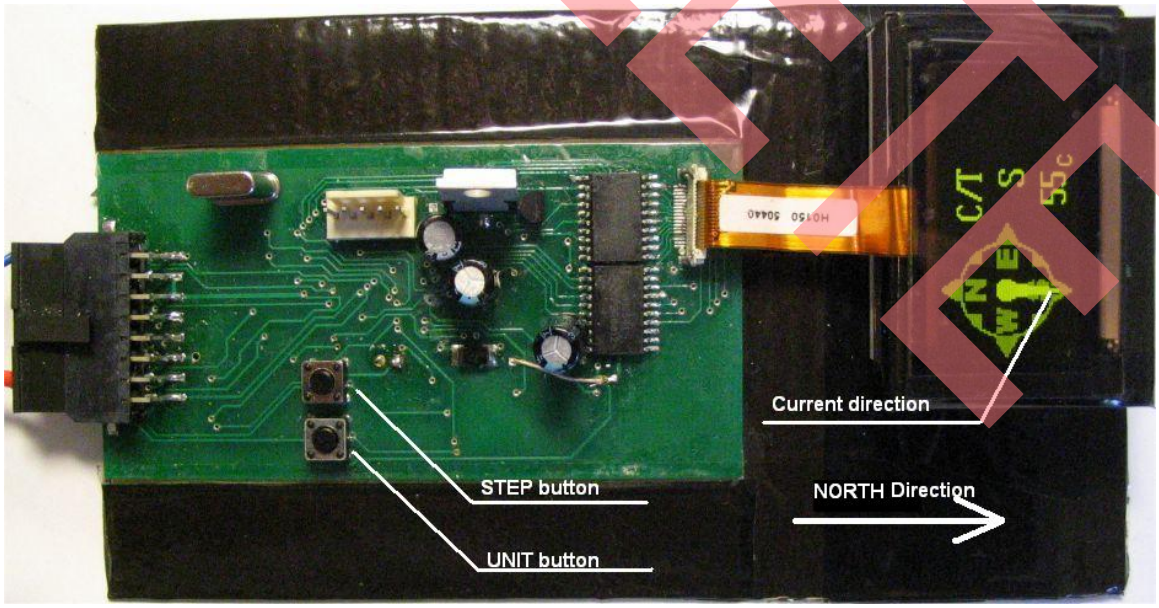


OBSOLETE

## About the Author

**Name:** Valeriy Kyrynyuk

**Title:** Engineer

**Background:** Eight years experience with fieldbus and communications device design.

**Contact:** vaky_ukr@cypress.com

## Document History

**Document Title: Tilt-Compensated Digital Magnetic Compass with Built-In Temperature Sensor, OLED Graphics Display - AN2348**

**Document Number: 001-15234**

| Revision | ECN | Orig. of Change | Submission Date | Description of Change |
|---|---|---|---|---|
| ** | 1402624 | SWU | 08/21/2007 | New application note. |
| *A | 3349623 | YARD_UKR | 08/19/2011 | Updated project to support the latest version PSoC designer. |
| *B | 4511185 | GRAA | 09/23/2014 | Obsolete document.<br>Completing Sunset Review. |

In March of 2007, Cypress re-cataloged all of its Application Notes using a new documentation number and revision code. This new documentation number and revision code (001-xxxxx, beginning with rev. **), located in the footer of the document, will be used in all subsequent revisions.

PSoC is a registered trademark of Cypress Semiconductor Corp. "Programmable System-on-Chip," PSoC Designer, and PSoC Express are trademarks of Cypress Semiconductor Corp. All other trademarks or registered trademarks referenced herein are the property of their respective owners.

Cypress Semiconductor
198 Champion Court
San Jose, CA 95134-1709
Phone: 408-943-2600
Fax: 408-943-4730
http://www.cypress.com/

© Cypress Semiconductor Corporation, 2007-2014. The information contained herein is subject to change without notice. Cypress Semiconductor Corporation assumes no responsibility for the use of any circuitry other than circuitry embodied in a Cypress product. Nor does it convey or imply any license under patent or other rights. Cypress products are not warranted nor intended to be used for medical, life support, life saving, critical control or safety applications, unless pursuant to an express written agreement with Cypress. Furthermore, Cypress does not authorize its products for use as critical components in life-support systems where a malfunction or failure may reasonably be expected to result in significant injury to the user. The inclusion of Cypress products in life-support systems application implies that the manufacturer assumes all risk of such use and in doing so indemnifies Cypress against all charges.

This Source Code (software and/or firmware) is owned by Cypress Semiconductor Corporation (Cypress) and is protected by and subject to worldwide patent protection (United States and foreign), United States copyright laws and international treaty provisions. Cypress hereby grants to licensee a personal, non-exclusive, non-transferable license to copy, use, modify, create derivative works of, and compile the Cypress Source Code and derivative works for the sole purpose of creating custom software and or firmware in support of licensee product to be used only in conjunction with a Cypress integrated circuit as specified in the applicable agreement. Any reproduction, modification, translation, compilation, or representation of this Source Code except as specified above is prohibited without the express written permission of Cypress.

Disclaimer: CYPRESS MAKES NO WARRANTY OF ANY KIND, EXPRESS OR IMPLIED, WITH REGARD TO THIS MATERIAL, INCLUDING, BUT NOT LIMITED TO, THE IMPLIED WARRANTIES OF MERCHANTABILITY AND FITNESS FOR A PARTICULAR PURPOSE. Cypress reserves the right to make changes without further notice to the materials described herein. Cypress does not assume any liability arising out of the application or use of any product or circuit described herein. Cypress does not authorize its products for use as critical components in life-support systems where a malfunction or failure may reasonably be expected to result in significant injury to the user. The inclusion of Cypress' product in a life-support systems application implies that the manufacturer assumes all risk of such use and in doing so indemnifies Cypress against all charges.

Use may be limited by and subject to the applicable Cypress software license agreement.

OBSOLETE