Please note that Cypress is an Infineon Technologies Company.
The document following this cover page is marked as “Cypress” document as this is the company that originally developed the product. Please note that Infineon will continue to offer the product to new and existing customers as part of the Infineon product portfolio.

Continuity of document content
The fact that Infineon offers the following product as part of the Infineon product portfolio does not lead to any changes to this document. Future revisions will occur when appropriate, and any changes will be set out on the document history page.

Continuity of ordering part numbers
Infineon continues to support existing part numbers. Please continue to use the ordering part numbers listed in the datasheet for ordering.

AN2168

PSoC® 1 Understanding Switched Capacitor Filters

Author: Dave Van Ess

Associated Project: Yes

Associated Part Family: CY8C23x33,CY8C24xxx, CY8C27x43,28xxx,29x66

Software Version: PSoC® Designer™

Related Application Notes: AN2041

AN2168 presents the theory behind switched capacitor filters, and provides guidelines and examples for implementing these filters in PSoC 1 devices. Filters discussed include low pass, band pass, high pass, notch, and elliptical. Example projects for each type of filter are provided.

Contents

1 Introduction....1
2 Filter Basics 101....1
2.1 Roll Off Frequency (f_0)....2
3 PSoC Switched Capacitor Universal Two Pole Filter...2
4 Simple Rules for Filter Design....4
5 FilterCalc....5
6 Low Pass Filter....6
7 Low Pass Filter Example....7
8 Low Pass Filters, the Easy Method....10
9 Band Pass Filter....12
10 BPF2 Filter Example....15
11 May I have a Wizard Please....21
12 Alternate Band Pass Filter Example....23
13 High Pass Filter....27
13.1 Why Not?....29
13.2 Notch Filter....30
14 Notch Filter Example....33
15 Elliptical Filter....35
16 Elliptical Filter Example....36
17 Summary....38
18 References....39
Document History....40
Worldwide Sales and Design Support....41

1 Introduction

A filter is a device that passes or rejects certain frequencies of a signal. Four common types of filters are:

- Low pass filter
- Band pass filter
- High pass filter
- Notch filter

All these filters can be built using PSoC switched capacitor blocks. For a better understanding of switched capacitor blocks in general, see Application Note AN2041 “Understanding Switched Capacitor Blocks.”

2 Filter Basics 101

The basic building block of second order filters is the second order universal filter transfer function. It is defined in Equation 1.

$$H(s) = \frac{h_{hp}\left(\frac{s}{2\pi f_0}\right)^2 + h_{bp}\left(\frac{s}{2\pi f_0}\right) + h_{lp}}{\left(\frac{s}{2\pi f_0}\right)^2 + d\left(\frac{s}{2\pi f_0}\right) + 1}$$

Equation 1

Five variables (**h_{hp}**, **h_{bp}**, **h_{lp}**, **d**, **and f_0**) allow construction of all filters types. The definition of each is given below.

2.1 Roll Off Frequency (f_0)

This is the frequency where the “s” terms start to dominate. Frequencies below these values are considered “low,” above this value are considered “high,” and around this value are considered in “band.”

2.1.1 Damping (d)

Damping is a measure of how a filter transitions from lower frequencies to higher frequencies. It is an index of the filter’s tendency to oscillate. Practical damping values range from 0 to 2. Table 1 shows the performance for different damping values.

Table 1.Damping Values vs. Filter Performance

Damping Value	Filter Performance
d < 0	Unstable
d = 0	Oscillator
d = 1.414	Critically damped
d = 2	Fully damped
d > 2	Excessively damped

2.1.2 High Pass Coefficient (h_{hp})

This is the coefficient of the numerator that dominates for frequencies greater than f_0.

2.1.3 Band Pass Coefficient (h_{bp})

This is the coefficient of the numerator that dominates for frequencies near f_0.

2.1.4 Low Pass Coefficient (h_{lp})

This is the coefficient of the numerator that dominates for frequencies lower than f_0.

These second order filter stages can be cascaded to produce higher order filters. Use the spreadsheet, ***FilterPlot.xls***, to experiment with different combinations of these five variables and view the response. It is located in the project file associated with this Application Note.

3 PSoC Switched Capacitor Universal Two Pole Filter

This section explains the detailed interworking and theory of switched capacitor filters, and how they are implemented in PSoC 1.

A topology for a state variable (bi-quad) switched capacitor filter is shown in Figure 1.

Figure 1. PSoC Bi-quad Filter

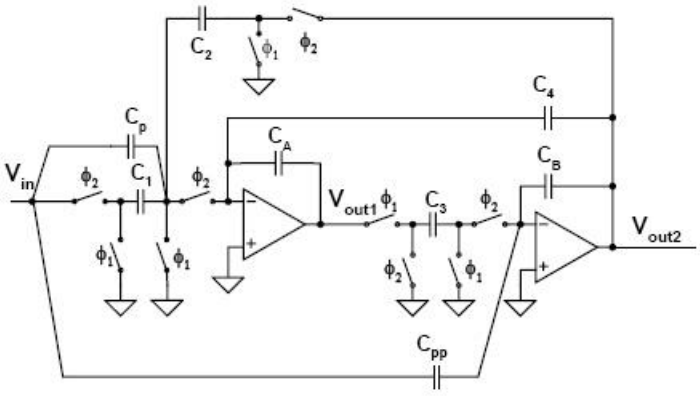

This bi-quad filter can be built with two switched capacitor blocks. They are both clocked with the same sample frequency, f_s. Equations 2 and 3 define the discrete time circuit operation of this filter.

$$V_{out1} = V_{out1}z^{-1} - V_{in}\frac{C_1}{C_A} - V_{out2}\frac{C_2}{C_A} - (V_{out2} - V_{out2}z^{-1})\frac{C_4}{C_A} - (V_{in} - V_{in}z^{-1})\frac{C_4}{C_A}$$ Equation 2

$$V_{out2} = V_{out2}z^{-1} + V_{out1}z^{-1}\frac{C_3}{C_B} - (V_{in} - V_{in}z^{-1})\frac{C_{pp}}{C_B}$$

Equation 3

Equations 2 and 3 are used to solve the transfer functions in Equations 4 and 5.

$$\frac{V_{out1}}{V_{in}} = \frac{-z^2C_BC_p + 2zC_BC_p - z^2C_BC_1 - C_BC_p + zC_BC_1 + z^2C_{pp}C_2 + z^2C_{pp}C_4 - 2zC_{pp}C_4 - zC_{pp}C_2 + C_{pp}C_4}{z^2C_BC_A - 2zC_BC_A + zC_2C_3 + zC_4C_3 - C_4C_3 + C_B + C_A}$$

Equation 4

$$\frac{V_{out2}}{V_{in}} = \frac{z^2C_{pp}C_A - 2zC_{pp}C_A + C_{pp}C_A + zC_pC_3 - C_pC_3 + zC_1C_3}{z^2C_BC_A - 2zC_BC_A + zC_2C_3 + zC_4C_3 - C_4C_3 + C_B + C_A}$$

Equation 5

Applying the bilinear transform given in Equation 6 to transform Equations 4 and 5 results in the Laplace transfer Equations 7 and 8.

$$z = -\frac{1 + \frac{s}{2f_s}}{1 - \frac{s}{2f_s}}$$

Equation 6

$$H(s)_{output1} = -\frac{-\frac{C_{pp}}{C_3}\frac{s}{f_s}\left(1 + \frac{s}{f_s}\left(\frac{C_4}{C_2} + 1\right)\right) + \frac{C_pC_B}{C_2C_3}\left(\frac{s}{f_s}\right)^2 + \frac{C_1C_B}{C_2C_3}\frac{s}{f_s}\left(1 + \frac{1}{2}\frac{s}{f_s}\right)}{\left(\frac{C_BC_A}{C_2C_3} - \frac{1}{2}\frac{C_4}{C_2} - \frac{1}{4}\right)\left(\frac{s}{f_s}\right)^2 + \frac{C_4}{C_2}\frac{s}{f_s} + 1}$$

Equation 7

$$H(s)_{output2} = -\frac{\frac{C_{pp}C_A}{C_2C_3}\left(\frac{s}{f_s}\right)^2 + \frac{C_p}{C_2}\frac{s}{f_s}\left(1 - \frac{s}{f_s}\right) + \frac{C_1}{C_2}\left(1 - \frac{1}{4}\left(\frac{s}{f_s}\right)^2\right)}{\left(\frac{C_BC_A}{C_2C_3} - \frac{1}{2}\frac{C_4}{C_2} - \frac{1}{4}\right)\left(\frac{s}{f_s}\right)^2 + \frac{C_4}{C_2}\frac{s}{f_s} + 1}$$

Equation 8

Note that the denominators for both Equations 7 and 8 are identical. This means the roll off frequency and damping values are identical for both outputs. Using Equation 1 as a template, the roll off frequency is shown in Equation 9

$$f_0 = \frac{f_s}{2\pi}\frac{\sqrt{C_2C_3}}{\sqrt{C_AC_B - \frac{1}{2}\frac{C_4}{C_3} - \frac{1}{4}C_2C_3}}$$

Equation 9

Note that the roll off frequency is directly proportional to the sample frequency. This is a feature of switched capacitor filters. A minor change in the sample frequency changes the roll off frequency. Equation 10 defines the over sample ratio as being the ratio of these two frequencies.

$$Oversample = \frac{f_s}{f_0} = 2\pi\frac{\sqrt{C_AC_B - \frac{1}{2}\frac{C_4}{C_3} - \frac{1}{4}C_2C_3}}{\sqrt{C_2C_3}}$$

Equation 10

For example, a 5 kHz filter that is sampled at 250 kHz is said to have an over sample ratio of 50. Changing the roll off to 3.7 kHz only requires that the sample frequency be changed to 50 * 3.7 kHz or 185 kHz. Again, using Equation 1 as a template and using the solution for f_0 in Equation 9, the damping value is shown in Equation 11.

$$d = \frac{C_4}{\sqrt{C_A C_B - \frac{1}{2}\frac{C_4}{C_3} - \frac{1}{4}C_2 C_3}}\sqrt{\frac{C_3}{C_2}}$$

Equation 11

The high pass coefficient for the first output, from Equation 7, is extracted and shown in Equation 12.

$$h_{hp1} = -\frac{C_p C_B}{C_A C_B - \frac{1}{2}C_3 C_4 - \frac{1}{4}C_2 C_3}$$

Equation 12

Again, from Equation 7, the band pass coefficient is extracted. For reasons that will later become clear, this coefficient divided by the damping value is shown in Equation 13.

$$\frac{h_{hp1}}{d} = -\frac{\frac{C_1 C_B}{C_2 C_3}\left(1 + \frac{1}{2}\frac{s}{f_s}\right)}{\frac{C_4}{C_2}} \approx -\frac{C_1 C_B}{C_4 C_3}$$

Equation 13

From Equation 8, the high pass, band pass, and low pass coefficients for the second output are extracted and shown in Equations 14, 15, and 16.

$$h_{hp2} = -\frac{C_{pp} C_A}{C_B C_A - \frac{1}{2}C_3 C_4 - \frac{1}{4}C_2 C_3}$$

Equation 14

$$h_{bp2} = -\frac{\frac{C_p}{C_2}\left(1 - \frac{s}{f_s}\right)}{\frac{C_4}{C_2}} \approx -\frac{C_p}{C_4}$$

Equation 15

$$h_{lp2} = -\frac{C_1}{C_2} + \left(1 - \frac{1}{4}\left(\frac{s}{f_s}\right)^2\right) \approx -\frac{C_1}{C_2}$$

Equation 16

Note that each coefficient is directly proportional to C1, Cp or Cpp. Also note that none of these values are used to determine the roll off frequency and damping value.

4 Simple Rules for Filter Design

There are three steps to design a PSoC switched capacitor filter. They are:

1. Determine the roll off frequency, damping value and pass coefficients for the desired filter.
2. Using Equations 9 and 11, determine the values required for C2, C3, C4, CA and C_B for the desired roll off frequency $\mathbf{f_0}$ and damping value d.
3. Using Equations 12 through 16, set the appropriate values to $\mathbf{C_1}$, $\mathbf{C_p}$ and $\mathbf{C_{pp}}$ to meet the desired pass coefficients.

5 FilterCalc

FilterCalc.exe is a program to calculate all combinations of capacitor values that result in an acceptable roll off frequency and damping value. It is located in the project file associated with this Application Note. When the program is run, it will prompt you for the following information:

- Output file name
- Damping value
- Damping tolerance
- The desired roll off frequency
- Roll off tolerance
- Column clock (4x f_s)

The program then calculates all combinations of the capacitors that meet these requirements. The acceptable combinations, if any, are written to the output file. The program also outputs to the terminal indicating the number of acceptable solutions.

For example, Figure 2 shows the terminal count given the following input:

- Output file is "*test.csv*"
- d = 1.414 +/- 5%
- f_0 = 5 kHz +/- 5%
- f_s = 250 kHz ($f_{ColumnClock}$ = 1 MHz)

Figure 2. Monitor for FilterCalc

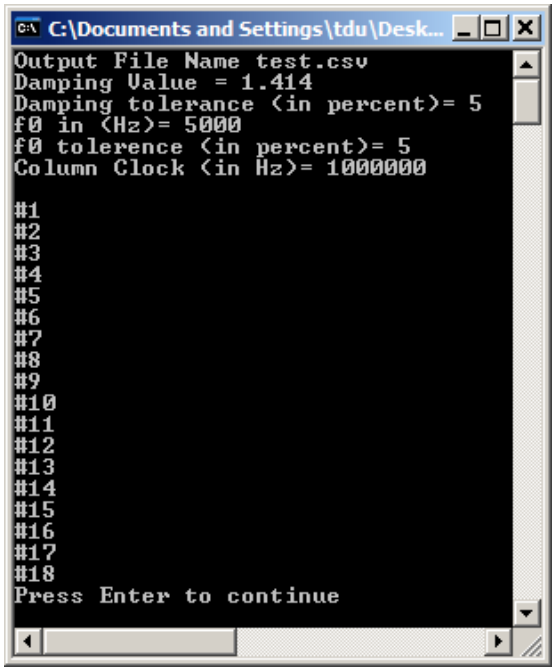

The program finds 18 solutions that meet the input constraints. Because the output file has a ".csv" extension it can be viewed with a spread sheet. It is shown in Figure 3. Any of these 18 solutions are acceptable. The user can decide which best meets their specific requirements.

Figure 3. FilterCalc Generated Spreadsheet

Microsoft Excel - test.csv

File Edit View Insert Format Tools Data Window Help

A2 = F0

	A	B	C	D	E	F	G	H	I	J
1	Damping	1.414								
2	F0	5000								
3	Column Clock	1000000								
4		C2	C3	C4	Ca	Cb	damping	d Error	f0	f0 Error
5		1	14	12	32	32	1.4672	3.76%	4864.86	-2.70%
6		1	15	11	32	32	1.3912	-1.61%	5032.25	0.65%
7		1	16	11	32	32	1.4413	1.93%	5213.3	4.27%
8		2	7	23	32	32	1.4035	-0.75%	4855.8	-2.88%
9		2	7	24	32	32	1.4672	3.76%	4864.86	-2.70%
10		2	8	21	32	32	1.3728	-2.91%	5202.15	4.04%
11		2	8	22	32	32	1.4413	1.93%	5213.3	4.27%
12		1	7	12	32	16	1.4672	3.76%	4864.86	-2.70%
13		1	8	11	32	16	1.4413	1.93%	5213.3	4.27%
14		2	4	21	32	16	1.3728	-2.91%	5202.15	4.04%
15		2	4	22	32	16	1.4413	1.93%	5213.3	4.27%
16		1	7	12	16	32	1.4672	3.76%	4864.86	-2.70%
17		1	8	11	16	32	1.4413	1.93%	5213.3	4.27%
18		2	4	21	16	32	1.3728	-2.91%	5202.15	4.04%
19		2	4	22	16	32	1.4413	1.93%	5213.3	4.27%
20		1	4	11	16	16	1.4413	1.93%	5213.3	4.27%
21		2	2	21	16	16	1.3728	-2.91%	5202.15	4.04%
22		2	2	22	16	16	1.4413	1.93%	5213.3	4.27%
23										

test

Ready NUM

The rest of this Application Note will deal in the specifics for each type of filter.

6 Low Pass Filter

A low pass filter allows the passing of signals from DC up to some cutoff frequency, f_{cutoff}. The transfer equation for a two-pole low pass filter is given in Equation 17.

$$H(s)_{lp} = \frac{h_{lp}}{\left(\frac{s}{2\pi f_0}\right)^2 + d\left(\frac{s}{2\pi f_0}\right) + 1}$$

Equation 17

A plot of a typical low pass filter is shown in Figure 4.

Figure 4. FilterPlot-Generated Low Pass Filter

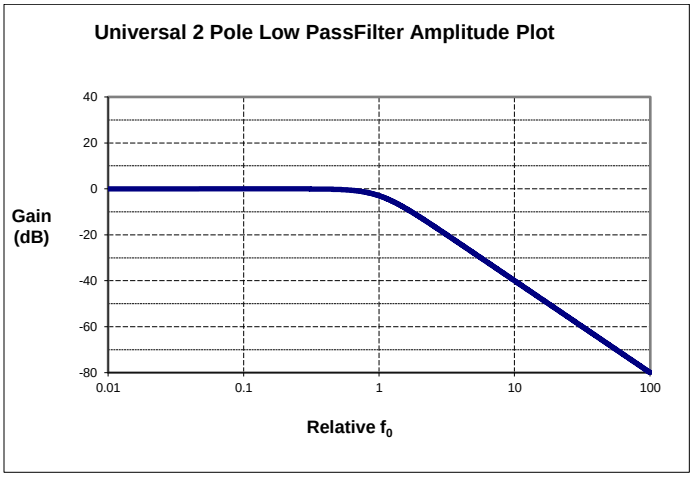

This plot and Table 1 show that the response is relatively flat for frequencies less than f0. For frequencies greater than f0, the signal falls off as the square of the frequency. At f0 the output is attenuated by the damping value.

Table 2. Selected Points on Low Pass Transfer Function

Gain	Condition
H(s)lp = hlp	s/2πf0 = 0
H(s)lp ≈ hlp	s/2πf0 = 1/10
H(s)lp = hlp/d	s/2πf0 = 1
H(s)lp ≈ hlp/102	s/2πf0 = 10
H(s)lp ≈ hlp/1002	s/2πf0 = 100

Note that the cut off frequency, f_{cutoff}, is defined as the frequency where the output is attenuated by 3 dB. It is not necessarily equal to f_0. Fortunately, many filter reference books have tables with the necessary roll off and damping values calculated for different types and orders of filters [1].

The transfer function shown in Equation 17 can be made by taking the V_{out2} transfer Equation 8 and setting C_p and C_{pp} to zero. The low pass coefficient is shown in Equation 18.

$$h_{lp} - \frac{C_1}{C_2}$$

Equation 18

The topology for a PSoC switched capacitor low pass filter in shown in Figure 5.

Figure 5. PSoC Two-Pole Low Pass Filter

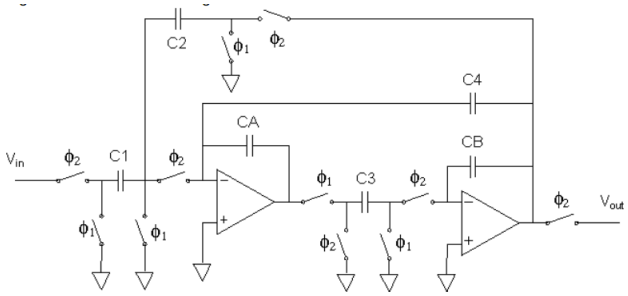

This is the topology used to implement the **LPF2** User Module.

7 Low Pass Filter Example

The goal of this example is to construct the following filter:

- Two pole Bessel low pass filter
- Cut off frequency of 5 kHz
- An over sample ratio of 50 (f_s = 250 kHz)
- Unity gain

Standard tables from filter reference books[1] show that the filter is constructed with:

- f_0 = 1.274 * 5 kHz = 6,370 kHz
- d = 1.732

The following figure shows the FilterCalc monitor.

Figure 6. FilterCalc for Low Pass Example

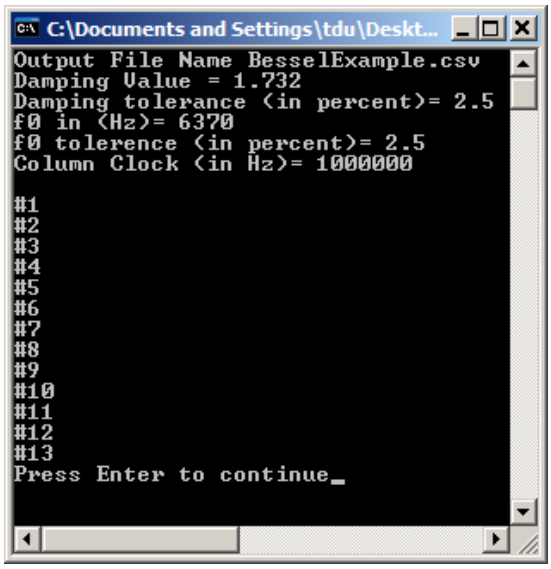

There are 13 solutions that meet the design constraints. Figure 7 is the spreadsheet that lists them.

Figure 7. Bessel Example Solutions

Microsoft Excel - BesselExample.csv

File Edit View Insert Format Tools Data Window Help

B14 = 2

	A	B	C	D	E	F	G	H	I	J
1	Damping	1.732								
2	F0	6370								
3	Column Clock	1000000								
4		C2	C3	C4	Ca	Cb	damping	d Error	f0	f0 Error
5		1	22	11	32	32	1.7222	-0.57%	6229.52	-2.21%
6	smallest f0 error	1	23	11	32	32	1.7666	2.00%	6390.03	0.31%
7	smallest d error	2	11	22	32	32	1.7222	-0.57%	6229.52	-2.21%
8		2	12	21	32	32	1.7223	-0.56%	6526.55	2.46%
9	largest C2 value	3	8	31	32	32	1.6931	-2.25%	6519.25	2.34%
10		1	11	11	32	16	1.7222	-0.57%	6229.52	-2.21%
11		2	6	21	32	16	1.7223	-0.56%	6526.55	2.46%
12		3	4	31	32	16	1.6931	-2.25%	6519.25	2.34%
13		1	11	11	16	32	1.7222	-0.57%	6229.52	-2.21%
14		2	6	21	16	32	1.7223	-0.56%	6526.55	2.46%
15		3	4	31	16	32	1.6931	-2.25%	6519.25	2.34%
16		2	3	21	16	16	1.7223	-0.56%	6526.55	2.46%
17		3	2	31	16	16	1.6931	-2.25%	6519.25	2.34%

BesselExample

Ready NUM

Any of these solutions meet the requirements. If a solution with the smallest roll off error is important, then the row 6 solution would be best. If the smallest damping error is important, the row 7 solution is best. If the largest value of C_2 is important, then choose the row 9 solution. (To reduce DC offset error caused by charge injection from the switches, it is desirable to keep the value of C_2 as high possible). For this example, the solution in row 9 is selected.

A value for C1 can be calculated using Equation 18. For unity gain, C1 must equal to C2.The user module parameters are shown in Figure 8.

Figure 8. Bessel Filter Parameters

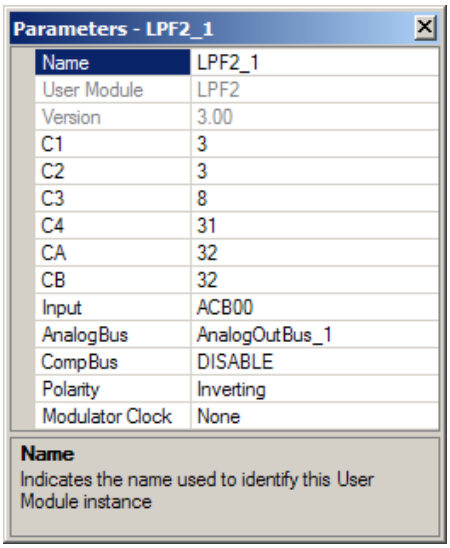

The user module placement is shown in Figure 9.

Figure 9.Bessel Example Block Placement

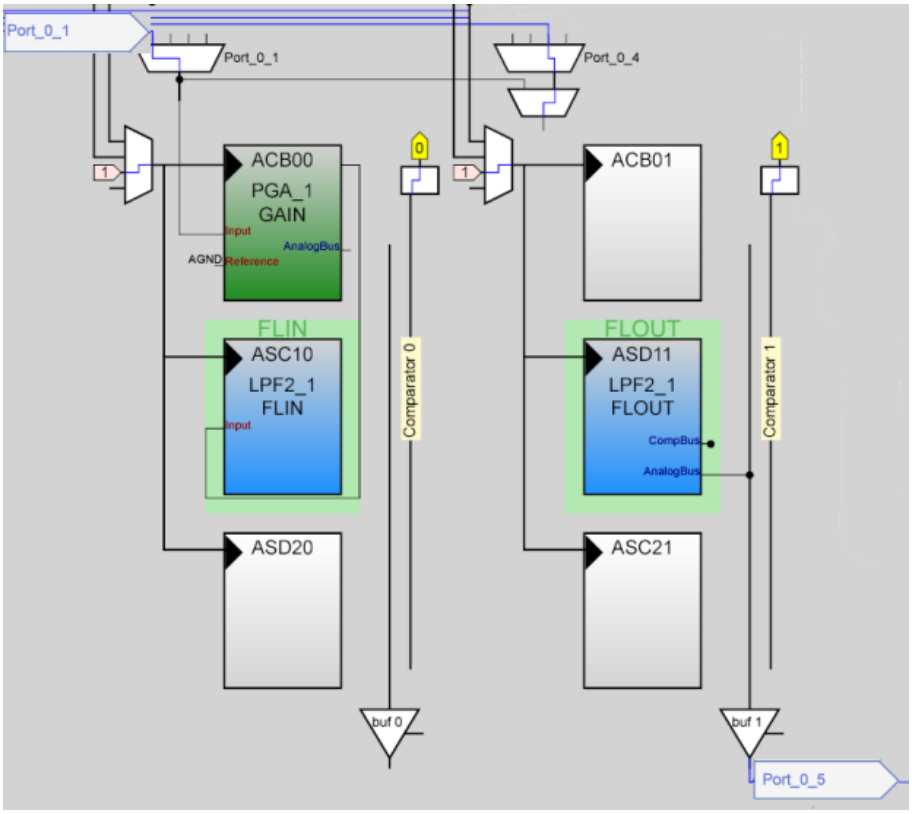

Figure 10 is a spectral plot for the filter.

Figure 10. Spectral Plot for Bessel50x Filter

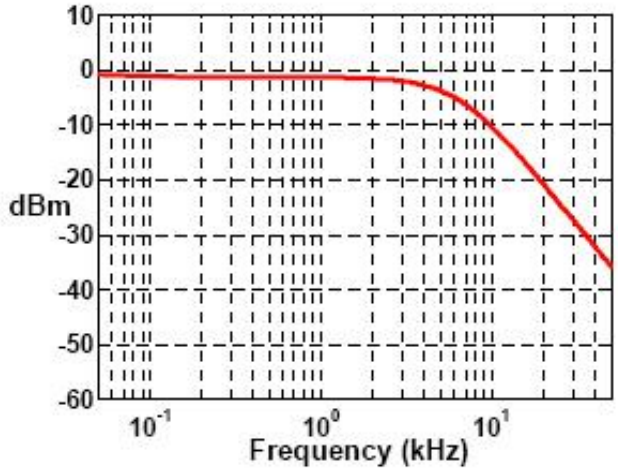

Examination of the plot shows that the signal is down 3 dB around 5 kHz.

8 Low Pass Filters, the Easy Method

The earlier method was a lot of work to calculate a single set of filter values. Cypress has provided a more automated solution. From PSoC Designer, go to **Help >> Documentation >>Filter Design**. Figure 11 shows the spreadsheets available

Figure 11. Filter Design Spreadsheets

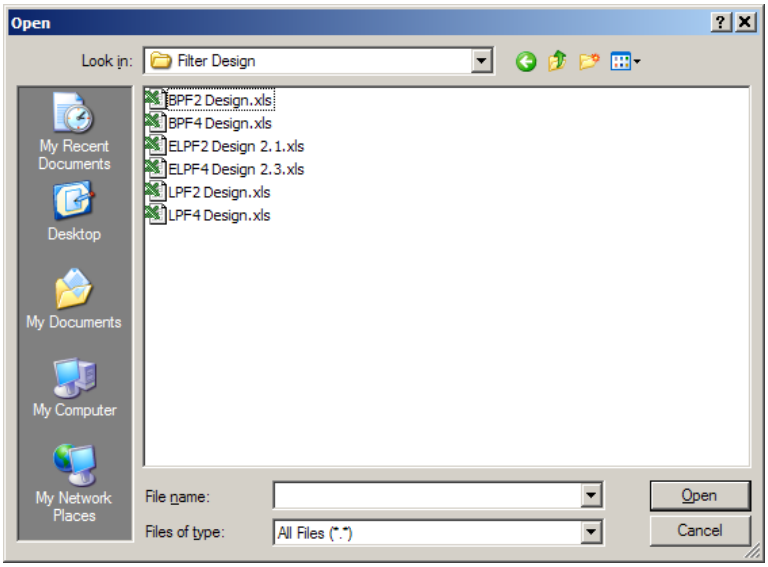

Figure 12. Two-Pole Low Pass Filter Design Spreadsheet

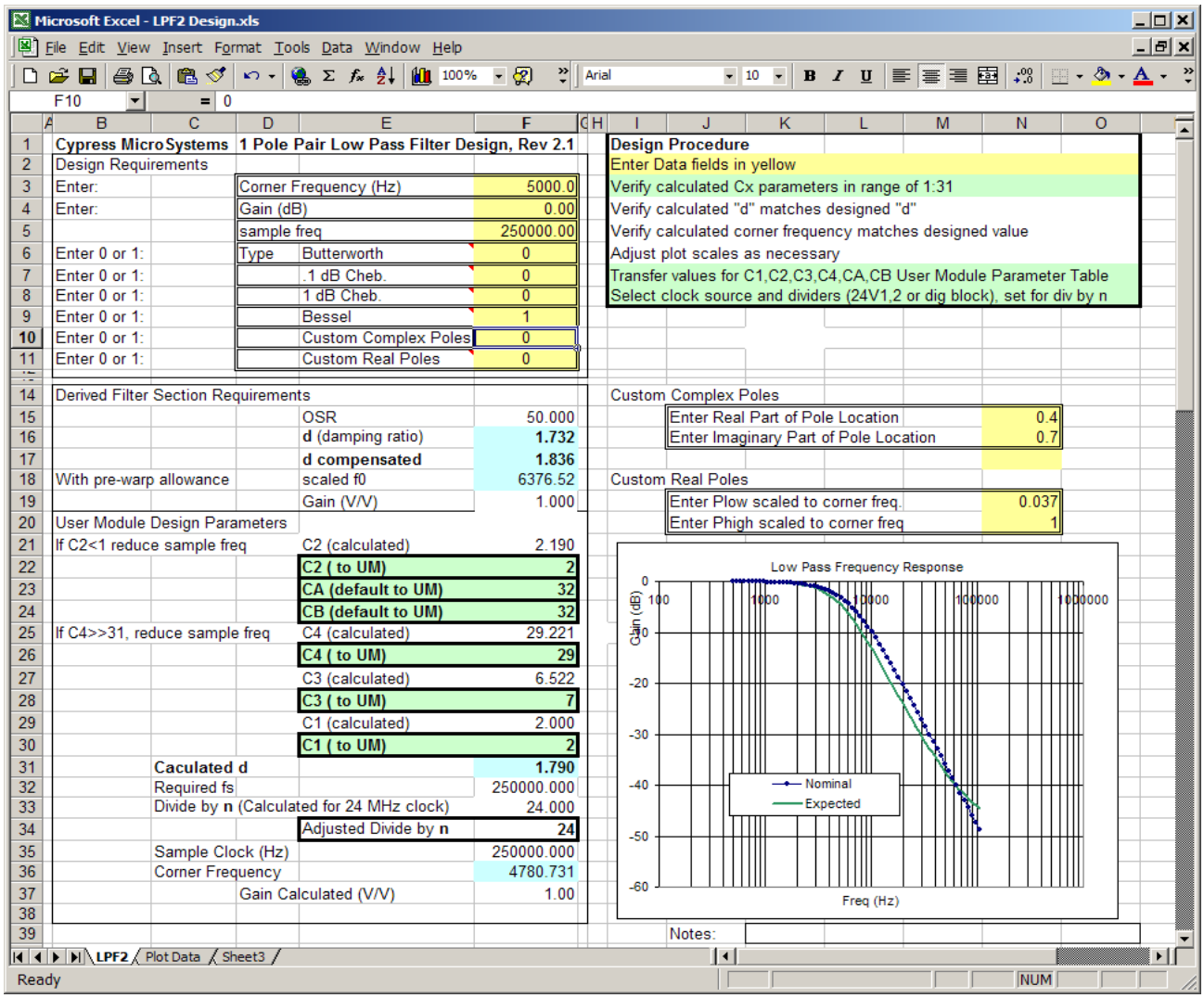

Opening up ***LPF2 Design.xls*** brings up a low pass filter design spreadsheet. See Figure 12. The filter characteristics are entered in the yellow cells. For this specific case, the filter is selected to have:

- A cutoff frequency of 5 kHz
- A Unity Gain (0 dB)
- A Bessel Response
- 250kHz Sample Freq

The derived filter requirements for damping value roll off frequency, and gain are shown in rows 16, 18, and 19.

A plot of the filter response including the effects of sampling and Nyquist frequency is provided. The **design procedure** is included in the box at the top right of the spreadsheet. This tool does not guarantee the best-fit solution; however, it does quickly provide a solution that meets all design requirements.

All of this is done without the user needing to know the damping and roll off values for their desired filter response. This same spreadsheet is available from PSoC Designer as a “Wizard” by selecting the Filter User Module then right clicking to get access to the Filter Design Wizard. The wizard has the advantage of automatically transferring the calculated values into that filter’s parameter locations. Also included with PSoC Designer is a spreadsheet for designing four-pole low pass filters (***LPF4 Design.xls***).

9 Band Pass Filter

A band pass filter allows the passing of signals around a defined median frequency. The transfer equation for a two-pole band pass filter is given in Equation 19.

$$H(s) = \frac{h_{bp}\left(\frac{s}{2\pi f_0}\right)}{\left(\frac{s}{2\pi f_0}\right)^2 + d\left(\frac{s}{2\pi f_0}\right) + 1}$$

Equation 19

A plot of a typical band pass filter is shown in Figure 13.

Figure 13. FilterPlot-Generated Band Pass Filter

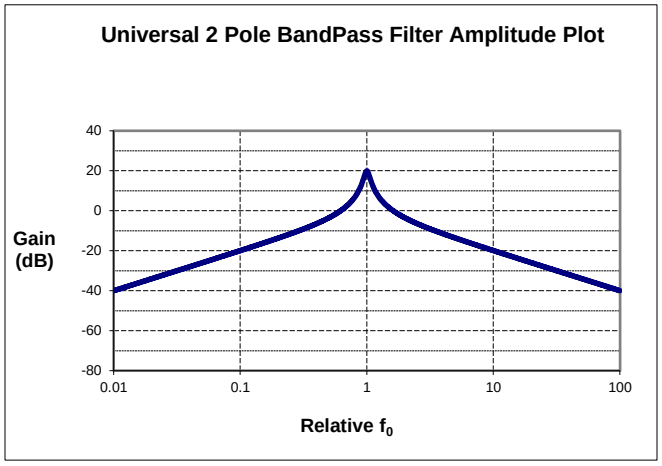

This plot and Table 3 show that the response peaks at f_0. It is equal to the pass coefficient divided by the damping value. For frequencies greater than $10f_0$, the signal falls off proportionally to the frequency. For frequencies less than $f_0/10$, the signal falls off inversely to the frequency.

Table 3. Selected Points on Band Pass Transfer Function

Gain	Condition
H(s)hp ≈ hlp/100	s/2πf0 = 1/100
H(s)hp ≈ hlp/10	s/2πf0 = 1/10
H(s)hp = hlp/d	s/2πf0 = 1
H(s)hp ≈ hhp/10	s/2πf0 = 10
H(s)hp ≈ hlp/100	s/2πf0 = 100

The bandwidth of the band pass filter is defined as the difference between the upper (**f_{upper}**) and lower (**f_{lower}**) cutoff frequencies where the amplitude falls 3 dB below the peak value on its way out of the pass band. The center frequency (**f_{center}**) is the geometric mean of these two limits. They are shown in Equations 20 and 21.

$$BW_{bp} = f_{upper} - f_{lower}$$

Equation 20

$$f_{center} = \sqrt{f_{upper} f_{lower}}$$

Equation 21

An important parameter of band pass filters is the filter selectivity (**Q**). It is defined as the center frequency divided by the bandwidth and is shown in Equation 22.

$$Q = \frac{f_{center}}{BW_{bp}} = \frac{\sqrt{f_{upper} f_{lower}}}{f_{upper} - f_{lower}}$$

Equation 22

To calculate the upper and lower cutoff points, Equation 19 is converted to the frequency format shown in Equation 23.

$$H(f)_{bp} = \frac{h_{bp}}{\left(\frac{f}{f_0} - \frac{f_0}{f}\right)\sqrt{-1} + d}$$ Equation 23

The amplitude of the transfer function will be down 3 db from the peak value when the imaginary part of the denominator in Equation 23 equals the real part of the denominator. This results in Equations 24 and 25.

$$\frac{f_{upper}}{f_0} - \frac{f_0}{f_{upper}} = d$$ Equation 24

$$\frac{f_0}{f_{lower}} - \frac{f_{lower}}{f_0} - = d$$ Equation 25

Solving these equations results in Equations 26 and 27.

$$f_{upper} = f_0 \frac{\sqrt{d^2 + 4} + d}{2}$$ Equation 26

$$f_{lower} = f_0 \frac{\sqrt{d^2 + 4} - d}{2}$$ Equation 27

Substituting the values in Equation 26 and 27 into the center frequency and bandwidth of Equations 20 and 21, results in Equations 28 and 29.

$$f_{center} = f_0 \sqrt{\frac{\sqrt{d^2 + 4} - d}{2} \frac{\sqrt{d^2 + 4} + d}{2}} = f_0$$ Equation 28

$$BW_{bp} = f_0 \frac{\sqrt{d^2 + 4} + d}{2} - f_0 \frac{\sqrt{d^2 + 4} - d}{2} = f_0 d$$ Equation 29

These equations are used to calculate Q. It is shown in Equation 30.

$$Q = \frac{f_{center}}{BW_{bp}} = \frac{f_0}{f_0 d} = \frac{1}{d}$$ Equation 30

Multiple band pass filters can be cascaded to form higher order filters. As with low pass filters, many filter reference books have tables with the necessary center frequency and Q values calculated for different types and orders of band pass filters[1].

The band pass transfer function shown in Equation 19 can be implemented two ways. One method is to take the V_{out1} transfer Equation 7 and set C_p and C_{pp} to zero. The band pass coefficient is shown in Equation 31.

$$\frac{h_{bp1}}{d} = -\frac{C_1 C_B}{C_4 C_3}$$ Equation 31

The topology for a PSoC switched capacitor band pass filter is shown in Figure 14.

Figure 14. PSoC Two-Pole Band Pass Filter

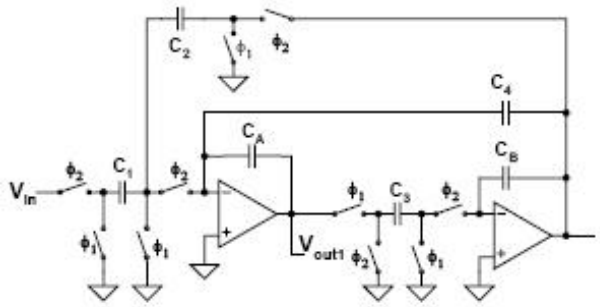

This is the topology used to implement the **BPF2** User Module.

An alternative method is to take the V_{out2} transfer Equation 8 and set C_1 and C_{pp} to zero. The alternative band pass coefficient is shown in Equation 32.

$$\frac{h_{bp2}}{d} = -\frac{C_p}{C_4}$$

Equation 32

The alternative topology is shown in Figure 15.

Figure 15. Alternative PSoC Band Pass Filter

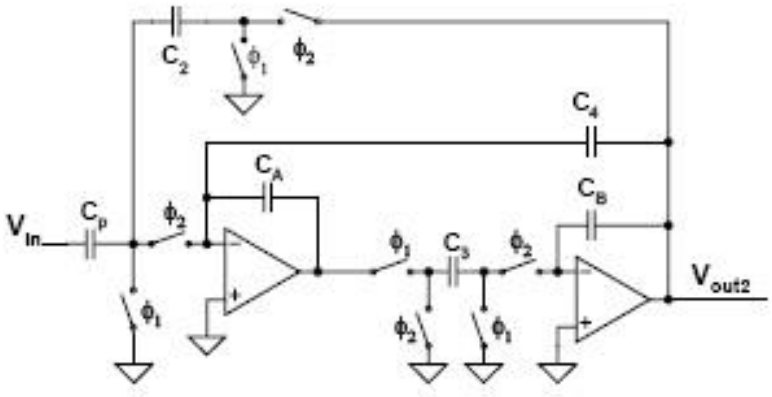

While there is no user module implementation of this alternate topology, a method for modification of an LPF2 User Module to perform this band pass function will be shown later.

10 BPF2 Filter Example

The goal of this example is to build a **1 kHz**, **4 V_{pp}** sinusoid generator. It is constructed by passing a 1 kHz square wave through a 1 kHz band pass filter to remove the unwanted extra harmonics. A block diagram is shown in Figure 16.

Figure 16. 1 kHz Sinusoid Generator Block Diagram

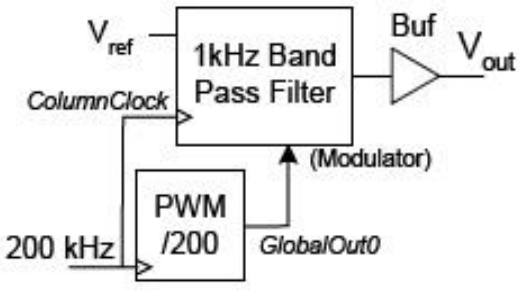

Note that the input to the filter is **V_{ref}**. It is converted to a +/-**V_{ref}** square wave by connecting the PWM output to the filter block's analog modulator input. The modulator toggles the input between +V_{ref} and -V_{ref} (RefHi and RefLo), these values are controlled by the RefMux parameter in the Global Resources of PSoC Designer. The block placement is shown in Figure 17.

Figure 17. Band Pass Example Block Placement

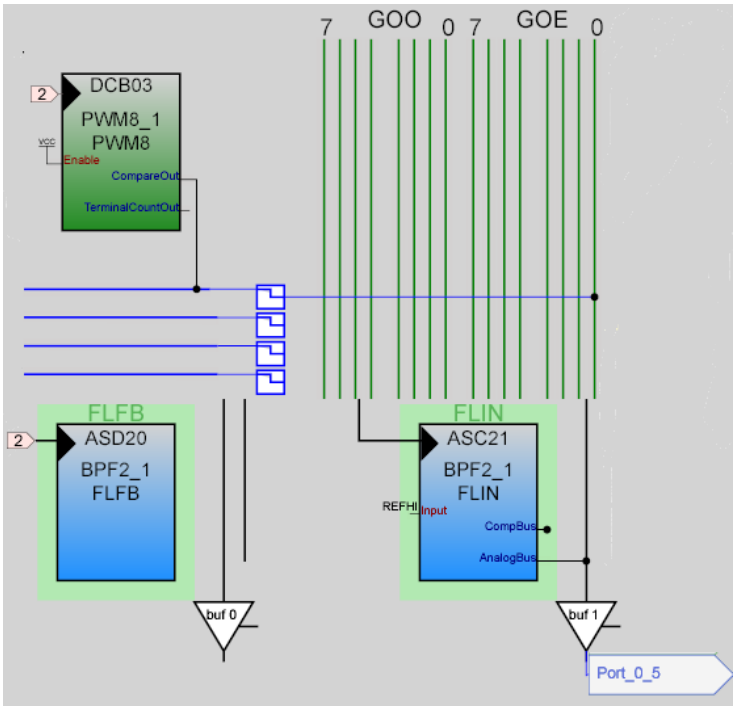

The requirements for the PWM8 are:

- 200 kHz input clock
- Period of 200
- Pulse width of 100
- Output connected to a modulator input (**GOE[0]**)

Figure 18 shows the parameters required to implement a PWM with these requirements:

Figure 18. Parameters for PWM8_1

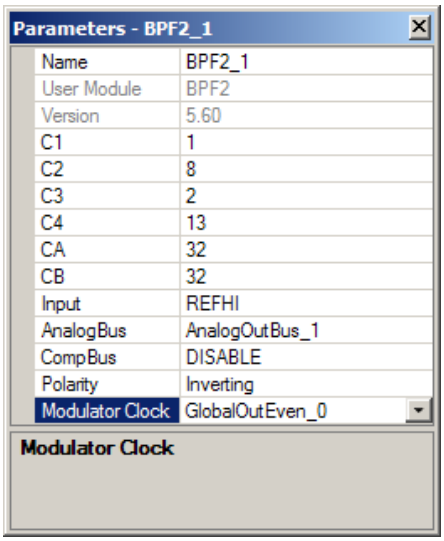

Equation 33 gives the Fourier series for a 1 kHz square wave with a +/- V_{ref} amplitude.

$$V_{ref}\ \frac{4}{\pi}\sum_{n=0}^{\infty}\frac{\sin\left(2\pi f_0(2n+1)\right)}{2n+1} \qquad \text{Equation 33}$$

The frequency components are at f_0, $3f_0$, $5f$ and so on. The hardest harmonic to remove is $3f_0$. A band pass filter with a Q of four attenuates the third harmonic by 20 dB. (The third harmonic is already 10 dB lower than the primary frequency for a total attenuation of 30 dB.)

One requirement for this filter is to have a Pk-Pk value of 4 V. $+V_{ref}$(RefHi) is 3.9 V and $-V_{ref}$(RefLo) is 1.3 V, this is only 2.6 V Pk-Pk, so some gain is needed. Equation 34 calculates the peak gain required for an output of +/- 2 volts and a reference voltage of 1.3 volts.

$$PeakGain = \frac{h_{bp}}{d} = \frac{C_1 C_B}{C_4 C_3} = \frac{4V_{pp}}{2V_{ref}\ \frac{4}{\pi}} = 1.208 \qquad \text{Equation 34}$$

The requirements for the band pass filter are summarized below:

- Two pole Bessel band pass filer
- Center Frequency of 1 kHz
- Q of approximately 4 (d = ¼)
- An over sample ratio of 50 (f_s = 50 kHz)
- Peak Gain of 1.208

Figure 19 shows the FilterCal monitor.

Figure 19. FilterCal for Band Pass Example

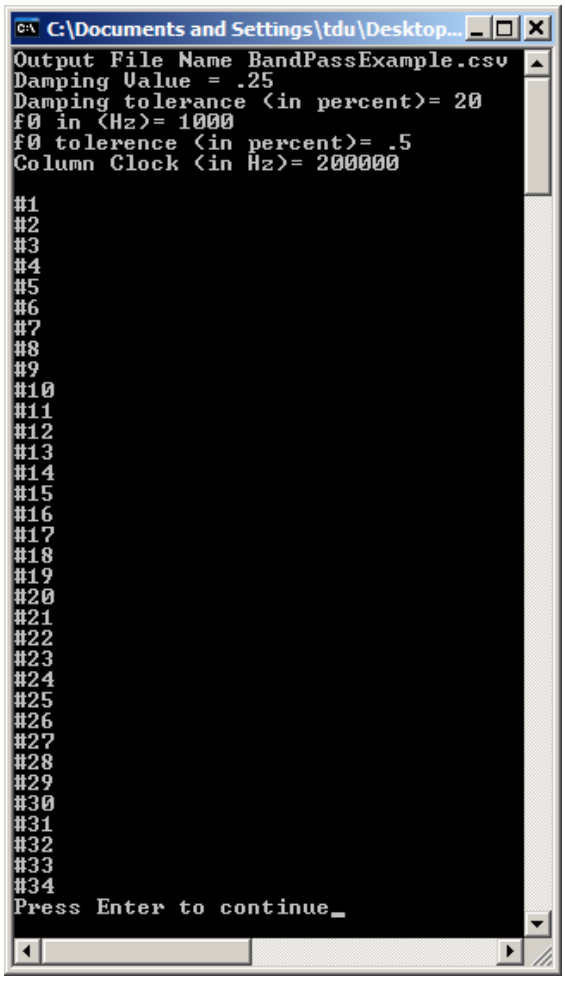

There are 34 solutions that meet the requirements for Q and center frequency. They are shown in the spreadsheet in Figure 20.

Figure 20. Band Pass Example Solutions

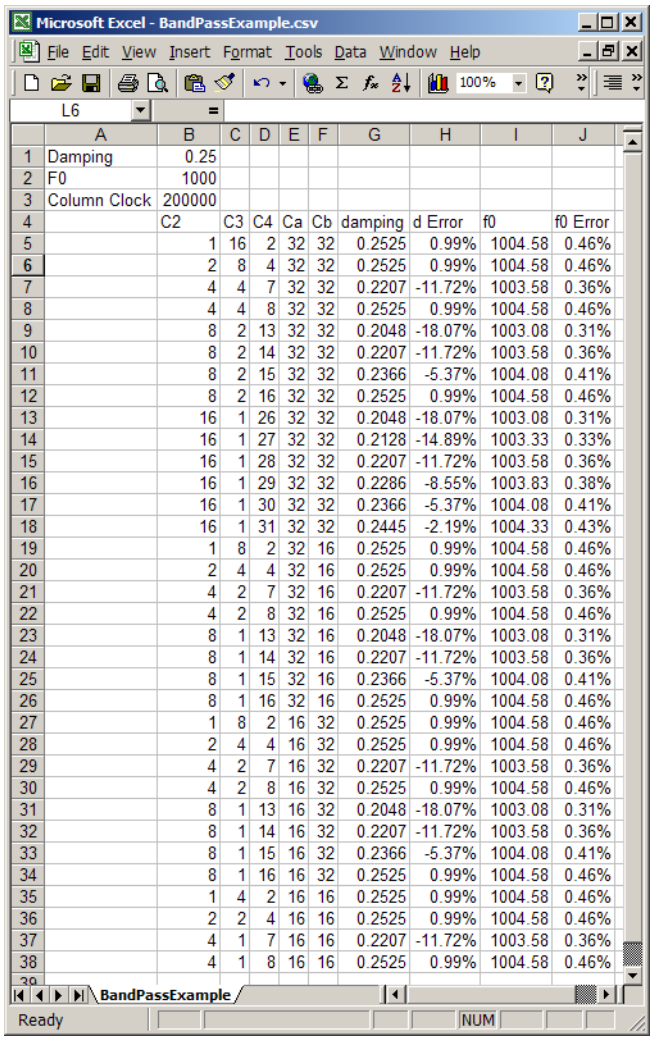

Microsoft Excel - BandPassExample.csv

File Edit View Insert Format Tools Data Window Help

L6 =

	A	B	C	D	E	F	G	H	I	J
1	Damping	0.25								
2	F0	1000								
3	Column Clock	200000								
4		C2	C3	C4	Ca	Cb	damping	d Error	f0	f0 Error
5		1	16	2	32	32	0.2525	0.99%	1004.58	0.46%
6		2	8	4	32	32	0.2525	0.99%	1004.58	0.46%
7		4	4	7	32	32	0.2207	-11.72%	1003.58	0.36%
8		4	4	8	32	32	0.2525	0.99%	1004.58	0.46%
9		8	2	13	32	32	0.2048	-18.07%	1003.08	0.31%
10		8	2	14	32	32	0.2207	-11.72%	1003.58	0.36%
11		8	2	15	32	32	0.2366	-5.37%	1004.08	0.41%
12		8	2	16	32	32	0.2525	0.99%	1004.58	0.46%
13		16	1	26	32	32	0.2048	-18.07%	1003.08	0.31%
14		16	1	27	32	32	0.2128	-14.89%	1003.33	0.33%
15		16	1	28	32	32	0.2207	-11.72%	1003.58	0.36%
16		16	1	29	32	32	0.2286	-8.55%	1003.83	0.38%
17		16	1	30	32	32	0.2366	-5.37%	1004.08	0.41%
18		16	1	31	32	32	0.2445	-2.19%	1004.33	0.43%
19		1	8	2	32	16	0.2525	0.99%	1004.58	0.46%
20		2	4	4	32	16	0.2525	0.99%	1004.58	0.46%
21		4	2	7	32	16	0.2207	-11.72%	1003.58	0.36%
22		4	2	8	32	16	0.2525	0.99%	1004.58	0.46%
23		8	1	13	32	16	0.2048	-18.07%	1003.08	0.31%
24		8	1	14	32	16	0.2207	-11.72%	1003.58	0.36%
25		8	1	15	32	16	0.2366	-5.37%	1004.08	0.41%
26		8	1	16	32	16	0.2525	0.99%	1004.58	0.46%
27		1	8	2	16	32	0.2525	0.99%	1004.58	0.46%
28		2	4	4	16	32	0.2525	0.99%	1004.58	0.46%
29		4	2	7	16	32	0.2207	-11.72%	1003.58	0.36%
30		4	2	8	16	32	0.2525	0.99%	1004.58	0.46%
31		8	1	13	16	32	0.2048	-18.07%	1003.08	0.31%
32		8	1	14	16	32	0.2207	-11.72%	1003.58	0.36%
33		8	1	15	16	32	0.2366	-5.37%	1004.08	0.41%
34		8	1	16	16	32	0.2525	0.99%	1004.58	0.46%
35		1	4	2	16	16	0.2525	0.99%	1004.58	0.46%
36		2	2	4	16	16	0.2525	0.99%	1004.58	0.46%
37		4	1	7	16	16	0.2207	-11.72%	1003.58	0.36%
38		4	1	8	16	16	0.2525	0.99%	1004.58	0.46%

BandPassExample

Ready NUM

Figure 21 shows the value of Q for each solution in column K. The value for the peak gain, when C1 = 1, has also been calculated in column L.

Figure 21. Q and PeakGain Included

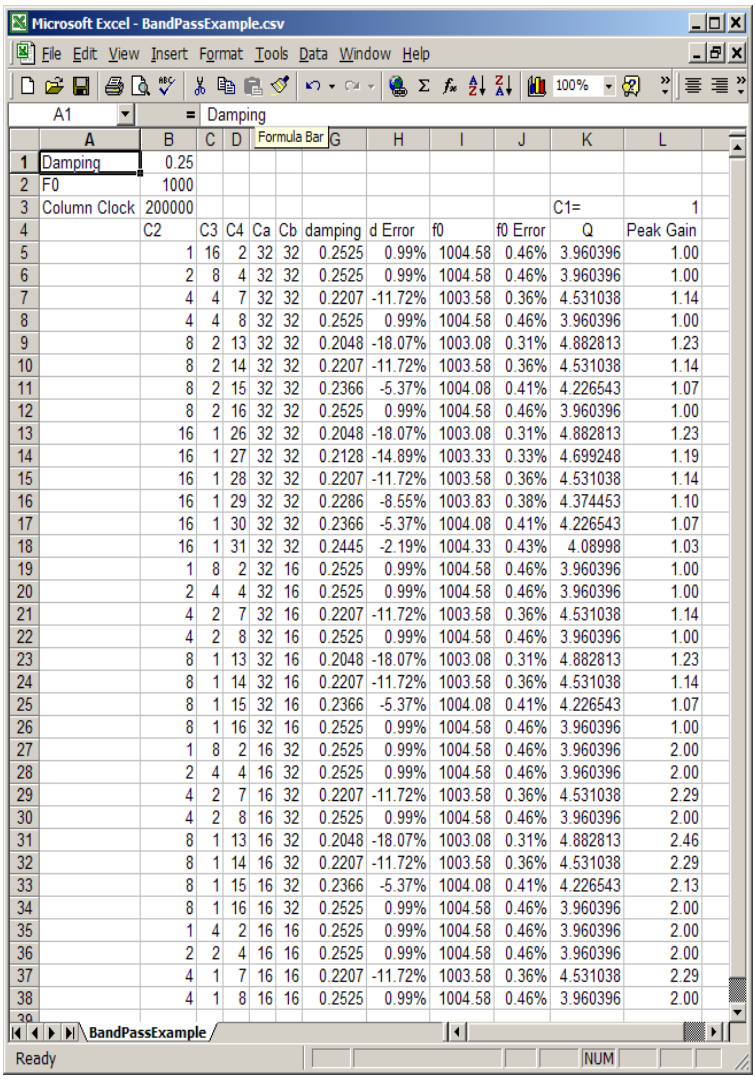

Microsoft Excel - BandPassExample.csv

File Edit View Insert Format Tools Data Window Help

A1 = Damping

	A	B	C	D	E	F	G	H	I	J	K	L
1	Damping	0.25										
2	F0	1000										
3	Column Clock	200000									C1=	1
4		C2	C3	C4	Ca	Cb	damping	d Error	f0	f0 Error	Q	Peak Gain
5		1	16	2	32	32	0.2525	0.99%	1004.58	0.46%	3.960396	1.00
6		2	8	4	32	32	0.2525	0.99%	1004.58	0.46%	3.960396	1.00
7		4	4	7	32	32	0.2207	-11.72%	1003.58	0.36%	4.531038	1.14
8		4	4	8	32	32	0.2525	0.99%	1004.58	0.46%	3.960396	1.00
9		8	2	13	32	32	0.2048	-18.07%	1003.08	0.31%	4.882813	1.23
10		8	2	14	32	32	0.2207	-11.72%	1003.58	0.36%	4.531038	1.14
11		8	2	15	32	32	0.2366	-5.37%	1004.08	0.41%	4.226543	1.07
12		8	2	16	32	32	0.2525	0.99%	1004.58	0.46%	3.960396	1.00
13		16	1	26	32	32	0.2048	-18.07%	1003.08	0.31%	4.882813	1.23
14		16	1	27	32	32	0.2128	-14.89%	1003.33	0.33%	4.699248	1.19
15		16	1	28	32	32	0.2207	-11.72%	1003.58	0.36%	4.531038	1.14
16		16	1	29	32	32	0.2286	-8.55%	1003.83	0.38%	4.374453	1.10
17		16	1	30	32	32	0.2366	-5.37%	1004.08	0.41%	4.226543	1.07
18		16	1	31	32	32	0.2445	-2.19%	1004.33	0.43%	4.08998	1.03
19		1	8	2	32	16	0.2525	0.99%	1004.58	0.46%	3.960396	1.00
20		2	4	4	32	16	0.2525	0.99%	1004.58	0.46%	3.960396	1.00
21		4	2	7	32	16	0.2207	-11.72%	1003.58	0.36%	4.531038	1.14
22		4	2	8	32	16	0.2525	0.99%	1004.58	0.46%	3.960396	1.00
23		8	1	13	32	16	0.2048	-18.07%	1003.08	0.31%	4.882813	1.23
24		8	1	14	32	16	0.2207	-11.72%	1003.58	0.36%	4.531038	1.14
25		8	1	15	32	16	0.2366	-5.37%	1004.08	0.41%	4.226543	1.07
26		8	1	16	32	16	0.2525	0.99%	1004.58	0.46%	3.960396	1.00
27		1	8	2	16	32	0.2525	0.99%	1004.58	0.46%	3.960396	2.00
28		2	4	4	16	32	0.2525	0.99%	1004.58	0.46%	3.960396	2.00
29		4	2	7	16	32	0.2207	-11.72%	1003.58	0.36%	4.531038	2.29
30		4	2	8	16	32	0.2525	0.99%	1004.58	0.46%	3.960396	2.00
31		8	1	13	16	32	0.2048	-18.07%	1003.08	0.31%	4.882813	2.46
32		8	1	14	16	32	0.2207	-11.72%	1003.58	0.36%	4.531038	2.29
33		8	1	15	16	32	0.2366	-5.37%	1004.08	0.41%	4.226543	2.13
34		8	1	16	16	32	0.2525	0.99%	1004.58	0.46%	3.960396	2.00
35		1	4	2	16	16	0.2525	0.99%	1004.58	0.46%	3.960396	2.00
36		2	2	4	16	16	0.2525	0.99%	1004.58	0.46%	3.960396	2.00
37		4	1	7	16	16	0.2207	-11.72%	1003.58	0.36%	4.531038	2.29
38		4	1	8	16	16	0.2525	0.99%	1004.58	0.46%	3.960396	2.00

BandPassExample

Ready NUM

This data is then sorted by peak gain value. It is shown in Figure 22.

Figure 22. Data Sorted by Peak Gain Value

Microsoft Excel - BandPassExample.csv

File Edit View Insert Format Tools Data Window Help

L24 = =((L3*F24)/(D24*C24))

	A	B	C	D	E	F	G	H	I	J	K	L
1	Damping	0.25										
2	F0	1000										
3	Column Clock	200000									C1=	1
4		C2	C3	C4	Ca	Cb	damping	d Error	f0	f0 Error	Q	Peak Gain
5		1	16	2	32	32	0.2525	0.99%	1004.58	0.46%	3.960396	1.00
6		2	8	4	32	32	0.2525	0.99%	1004.58	0.46%	3.960396	1.00
7		4	4	8	32	32	0.2525	0.99%	1004.58	0.46%	3.960396	1.00
8		8	2	16	32	32	0.2525	0.99%	1004.58	0.46%	3.960396	1.00
9		1	8	2	32	16	0.2525	0.99%	1004.58	0.46%	3.960396	1.00
10		2	4	4	32	16	0.2525	0.99%	1004.58	0.46%	3.960396	1.00
11		4	2	8	32	16	0.2525	0.99%	1004.58	0.46%	3.960396	1.00
12		8	1	16	32	16	0.2525	0.99%	1004.58	0.46%	3.960396	1.00
13		16	1	31	32	32	0.2445	-2.19%	1004.33	0.43%	4.08998	1.03
14		8	2	15	32	32	0.2366	-5.37%	1004.08	0.41%	4.226543	1.07
15		16	1	30	32	32	0.2366	-5.37%	1004.08	0.41%	4.226543	1.07
16		8	1	15	32	16	0.2366	-5.37%	1004.08	0.41%	4.226543	1.07
17		16	1	29	32	32	0.2286	-8.55%	1003.83	0.38%	4.374453	1.10
18		4	4	7	32	32	0.2207	-11.72%	1003.58	0.36%	4.531038	1.14
19		8	2	14	32	32	0.2207	-11.72%	1003.58	0.36%	4.531038	1.14
20		16	1	28	32	32	0.2207	-11.72%	1003.58	0.36%	4.531038	1.14
21		4	2	7	32	16	0.2207	-11.72%	1003.58	0.36%	4.531038	1.14
22		8	1	14	32	16	0.2207	-11.72%	1003.58	0.36%	4.531038	1.14
23		16	1	27	32	32	0.2128	-14.89%	1003.33	0.33%	4.699248	1.19
24		8	2	13	32	32	0.2048	-18.07%	1003.08	0.31%	4.882813	1.23
25		16	1	26	32	32	0.2048	-18.07%	1003.08	0.31%	4.882813	1.23
26		8	1	13	32	16	0.2048	-18.07%	1003.08	0.31%	4.882813	1.23
27		1	8	2	16	32	0.2525	0.99%	1004.58	0.46%	3.960396	2.00
28		2	4	4	16	32	0.2525	0.99%	1004.58	0.46%	3.960396	2.00
29		4	2	8	16	32	0.2525	0.99%	1004.58	0.46%	3.960396	2.00
30		8	1	16	16	32	0.2525	0.99%	1004.58	0.46%	3.960396	2.00
31		1	4	2	16	16	0.2525	0.99%	1004.58	0.46%	3.960396	2.00
32		2	2	4	16	16	0.2525	0.99%	1004.58	0.46%	3.960396	2.00
33		4	1	8	16	16	0.2525	0.99%	1004.58	0.46%	3.960396	2.00
34		8	1	15	16	32	0.2366	-5.37%	1004.08	0.41%	4.226543	2.13
35		4	2	7	16	32	0.2207	-11.72%	1003.58	0.36%	4.531038	2.29
36		8	1	14	16	32	0.2207	-11.72%	1003.58	0.36%	4.531038	2.29
37		4	1	7	16	16	0.2207	-11.72%	1003.58	0.36%	4.531038	2.29
38		8	1	13	16	32	0.2048	-18.07%	1003.08	0.31%	4.882813	2.46

BandPassExample

Ready Count=33 NUM

Three solutions have a peak gain value close to 1.208. The solution in row 26 is selected. The BPF2_1 parameters are shown in Figure 23.

Figure 23. Band Pass Filter Parameters

Parameters - BPF2_1

Name	BPF2_1
User Module	BPF2
Version	5.60
C1	1
C2	8
C3	2
C4	13
CA	32
CB	32
Input	REFHI
AnalogBus	AnalogOutBus_1
CompBus	DISABLE
Polarity	Inverting
Modulator Clock	GlobalOutEven_0

Modulator Clock

The modulator connection is made by selecting

Modulator Clock to be **GlobalOutEven_0**, the output of the PWM.

Figure 24 shows that the output is in fact $4V_{pp}$ and has a frequency of 1 kHz.

Figure 24. $4V_{pp}$ 1 kHz Output

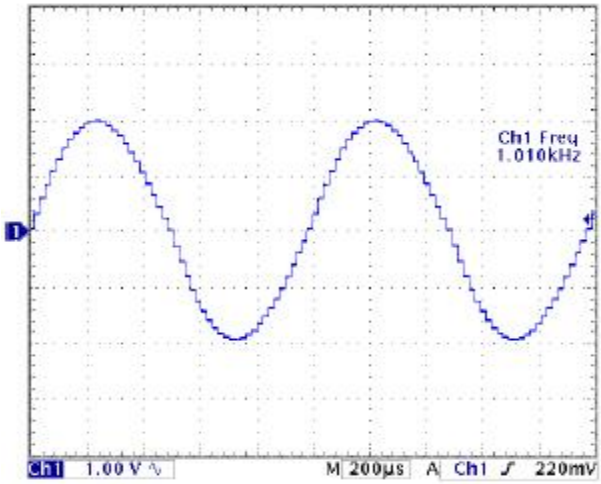

Note that the output is made up of 50 discrete samples per cycle. This is what is to be expected with a 50-kHz sampling clock (200-kHz column clock).

11 May I have a Wizard Please

There is design spreadsheet for two-pole and four-pole band pass filters. ***BPF2 Design.xls*** is opened and shown in Figure 25.

The filter characteristics are entered in the yellow cells. For this specific case, the filter is selected to have:

- A center frequency of 1 kHz
- Gain of 1.208 (1.64 dB)
- Bandwidth of 250 Hz
- Sample Frequency of 50kHz

Figure 25. Two-Pole Band Pass Filter Design Spreadsheet

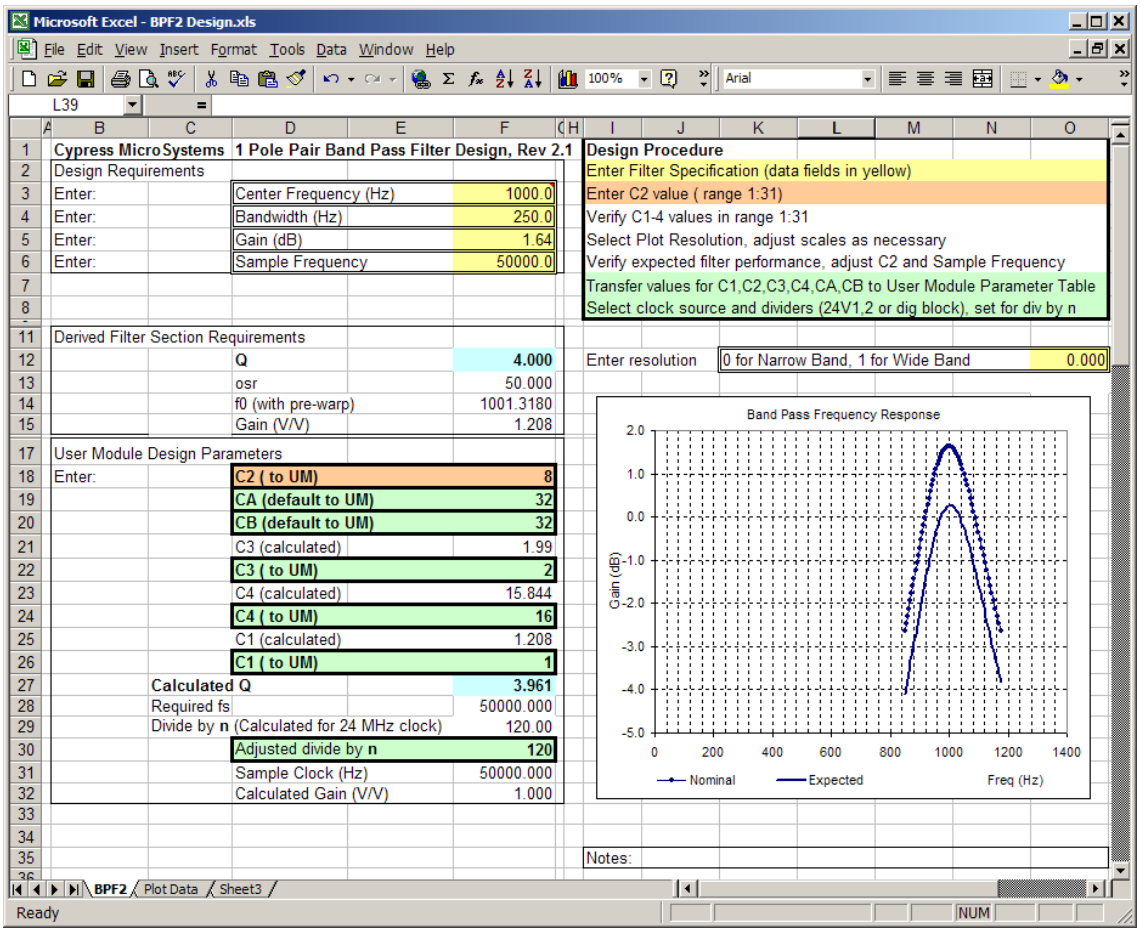

The derived filter requirements for Q, roll off frequency, and gain are shown in rows 12, 14, and 15.

The user manipulates the C_2 (the cell in orange) while keeping track of the calculated Q in row 27. When satisfied with these two values, the calculated values for C_A, C_B, C_3, C_4 and C_1 can be found in rows 19, 20, 22, 24, and 26.

A plot of the filter response including the effects of sampling and Nyquist frequency is provided. For this example, the best fit came out with a gain of one. This is 16% below the desired value of 1.208. Some leeway is allowed in the Q value. Figure 26 shows the solution when the bandwidth requirement is lowered to 200 Hz.

Figure 26. Spreadsheet with Bandwidth Requirement Altered

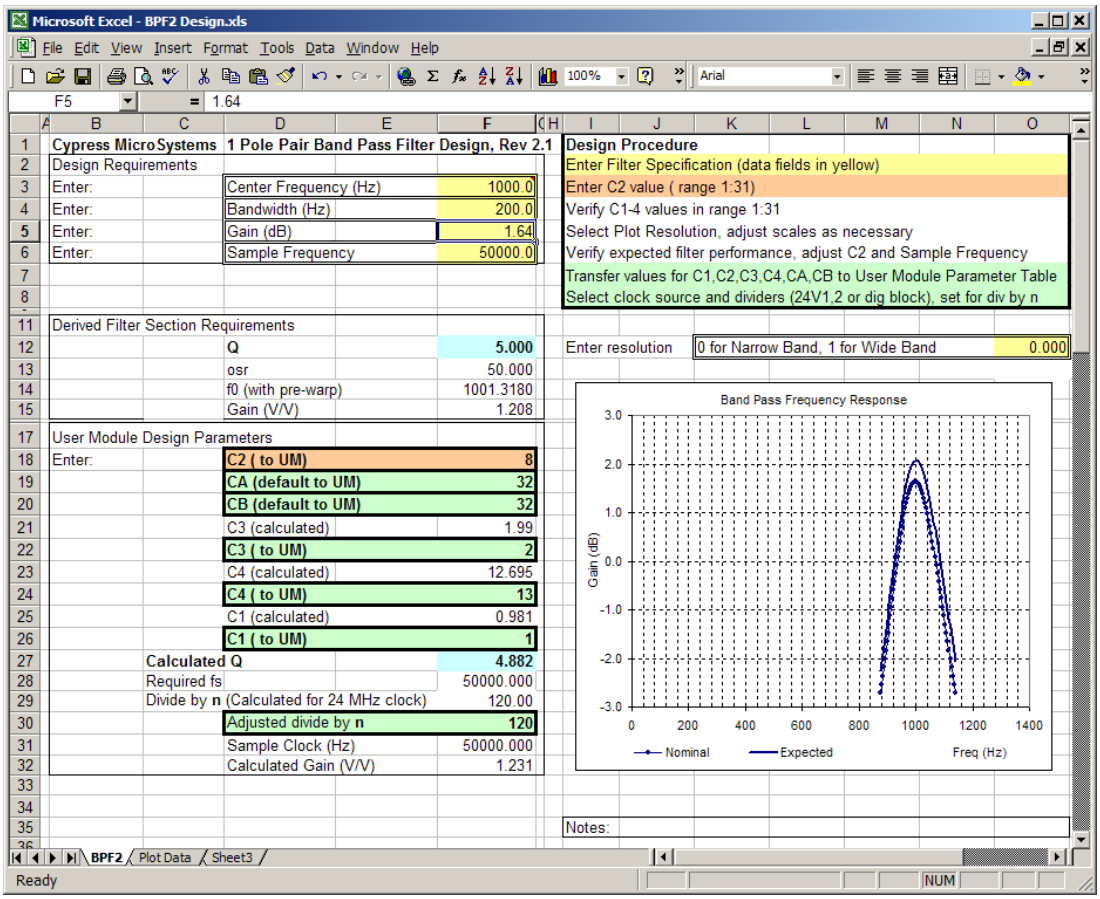

With the same C_2, C4 calculates to 13 and the gain is now 1.231 (a 2% error).

This same spreadsheet is available from PSoC Designer as a “Wizard” by selecting the Filter User Module then right clicking to get access to the Filter Design Wizard. The wizard has the advantage of automatically transferring the calculated values into that filter’s parameter locations. Also included with PSoC Designer is a spreadsheet for designing four pole band pass filters (***BPF4 Design.xls***)

12 Alternate Band Pass Filter Example

The goal of this example is to construct the following filter:

- Two pole band pass filter
- Center frequency of 5 kHz
- Q of 10 (d = .1)
- An over sample ratio of 50 (f_s = 250 kHz)
- Unity Peak Gain.

Figure 27 shows the FilterCalc monitor given these constraints.

Figure 27. FilterCalc Monitor for Alternate Band Pass Filter Example

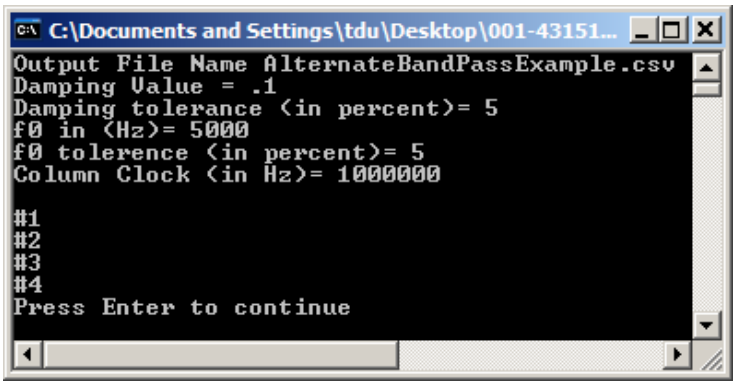

Four Solutions meet the design constraints. They are shown in Figure 28.

Figure 28. Alternate Band Pass Example Solutions

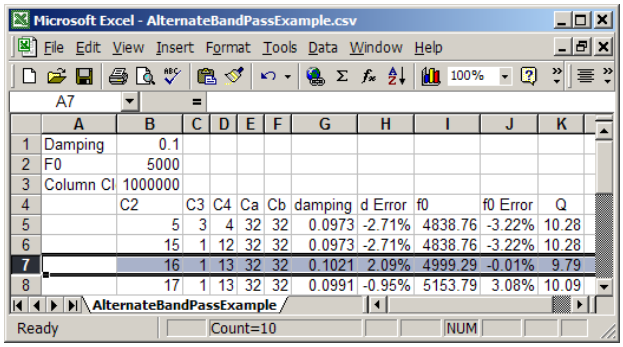

	A	B	C	D	E	F	G	H	I	J	K
1	Damping	0.1									
2	F0	5000									
3	Column Cl	1000000									
4		C2	C3	C4	Ca	Cb	damping	d Error	f0	f0 Error	Q
5		5	3	4	32	32	0.0973	-2.71%	4838.76	-3.22%	10.28
6		15	1	12	32	32	0.0973	-2.71%	4838.76	-3.22%	10.28
7		16	1	13	32	32	0.1021	2.09%	4999.29	-0.01%	9.79
8		17	1	13	32	32	0.0991	-0.95%	5153.79	3.08%	10.09

The solution in row 7 has the smallest center frequency error. It is the one selected.

The topology of the alternate band pass filter shown in Figure 13 is very close to the low pass filter topology shown in Figure 6. A low pass filter can be converted to an alternate band pass filter by:

- Setting C_1 to zero
- Setting C_p value in software

The user module placement is shown in Figure 29.

Figure 29. Alternate Band Pass Block Placement

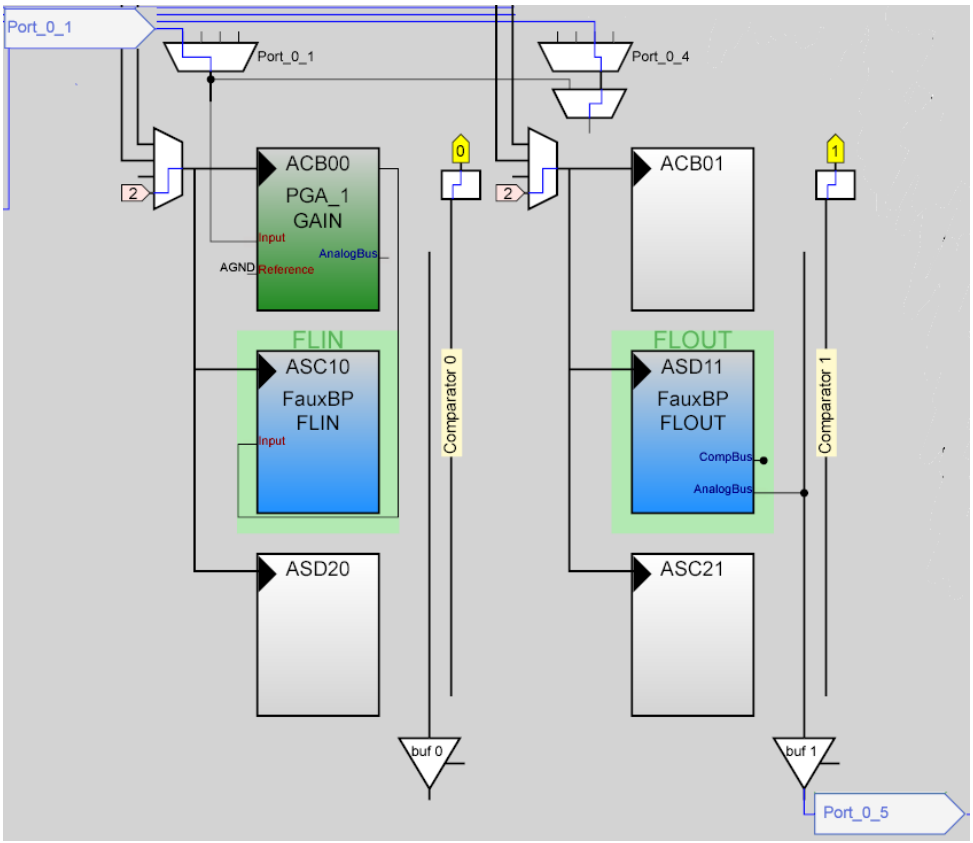

The user module parameters are shown in Figure 30.

Figure 30. FauxBP Parameters

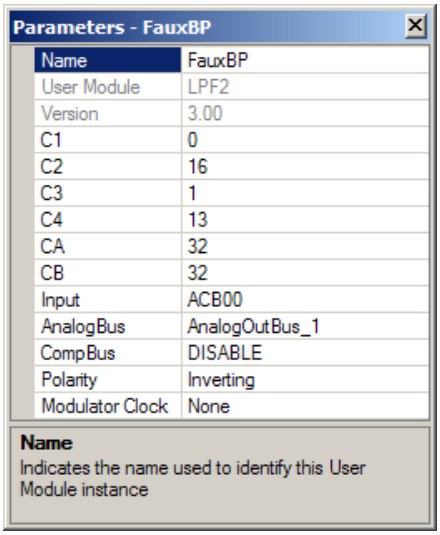

Note that C_1 is set to zero. The correct value and input connection must be set for C_p. C_1 is the ACap of the filter's input block, while C_p is the CCap of the same block.

C_p must be connected to the buffer located in ACB00. Figure 31 shows that setting the input for ACap (C_1) to ACB00 also set the CCap (C_p) input to ACB00.

Figure 31. C_1 and C_p Input Selection

13.2.44 ASCxxCR1

Analog Switch Cap Type C Block Control Register 1

Individual Register Names and Addresses:

ASC10CR1 : x,81h ASC12CR1 : x,89h ASC21CR1 : x : x,9Dh

	7	6	5	4	1	0
Access : POR	RW : 0					
Bit Name	ACMux[2:0]					

This register is one of four registers used to configure a type C switch capacitor PSoC block.

Bits	Name	Description
7:5	ACMux[2:0]	Encoding to select A and C inputs. (Note that available mux inputs vary by individual block.)

For 4 Column Analog PSoC Blocks:

	ASC10		ASC21		ASC12		ASC23	
	A Inputs	*C Inputs*	*A Inputs*	*C Inputs*	*A Inputs*	*C Inputs*	*A Inputs*	*C Inputs*
000b	ACB00	ACB00	ASD11	ASD11	ACB02	ACB02	ASD13	ASD13
001b	ASD11	ACB00	ASD20	ASD11	ASD13	ACB02	ASD22	ASD13
010b	RefHi	ACB00	RefHi	ASD11	RefHi	ACB02	RefHi	ASD13
011b	ASD20	ACB00	Vtemp	ASD11	ASD22	ACB02	ABUS3	ASD13
100b	ACB01	ASD20	ASC10	ASD11	ACB03	ASD22	ASC12	ASD13
101b	ACB00	ASD20	ASD20	ASD11	ACB02	ASD22	ASD22	ASD13
110b	ASD11	ASD20	ABUS1	ASD11	ASD13	ASD22	ABUS3	ASD13
111b	P2[1]	ASD20	ASD22	ASD11	ASD11	ASD22	P2[2]	ASD13

Figure 31 confirms the A and C inputs are correctly configured to connect to ACB00.

Example Code 1 shows the program that starts the filter and also configures the Ccap (Cp) value.

Equation 32 shows that for unity peak gain, C_p must equal C_4. Software is used to set the lower 5 bits of the register **ASC10CR** to 13. This is shown in example Code 2.

Code 1

```
 void main(void)
]{
    PGA_1_Start(PGA_1_HIGHPOWER);
    FauxBP_Start(FauxBP_HIGHPOWER);

    //set CCap (Cp) to 13
    ASC10CR2 |= 0x0d;

    while(1);
-}
```

Figure 32 shows a spectral plot of this filter.

Figure 32. Q=10 Alternate Band Pass Filter Spectral Plot

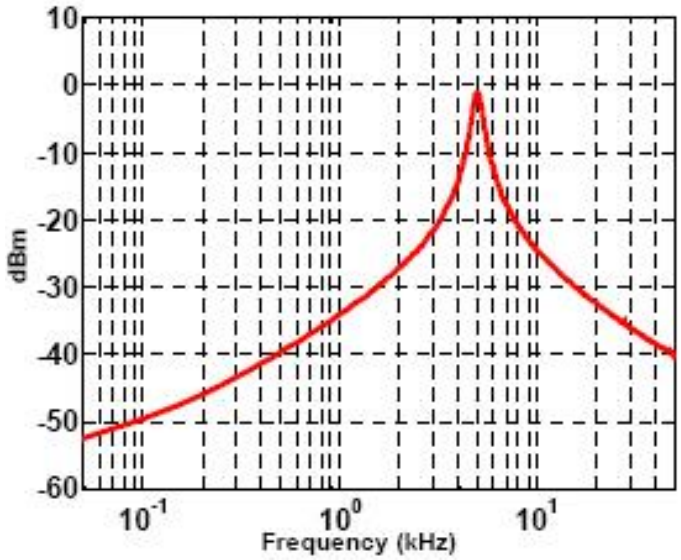

Examination of the plot shows that the signal has a center frequency of 5 kHz. It also is 40 dB down a decade away from the center frequency. This is consistent for a 5 kHz band pass filter with a Q of 10.

13 High Pass Filter

A high pass filter allows the passing of signals greater than some cutoff frequency fcutoff. The transfer equation for a two-pole high pass filter is given in Equation 35.

$$H(s)_{hp} = \frac{h_{hp}\left(\frac{s}{2\pi f_0}\right)^2}{\left(\frac{s}{2\pi f_0}\right)^2 + d\left(\frac{s}{2\pi f_0}\right) + 1}$$

Equation 35

A plot of a typical high pass filter is shown in Figure 33.

Figure 33. FilterPlot-Generated High Pass Filter

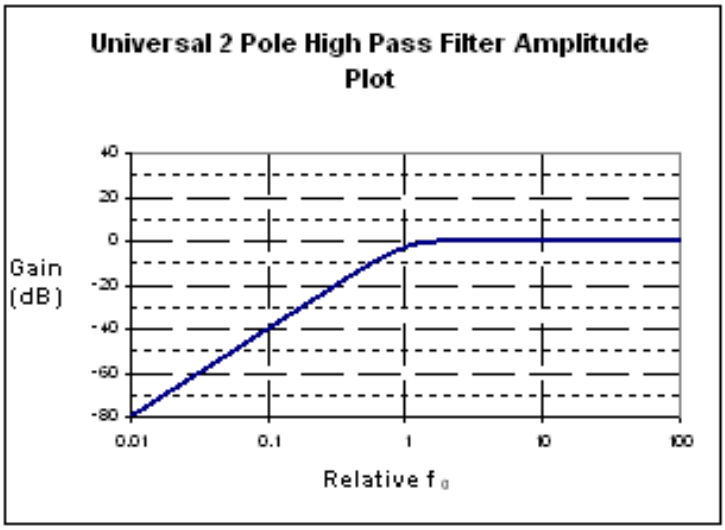

Table 4. Selected Points on High Pass Transfer Function

Gain	Condition
H(s)hp = 0	s/2πf0 = 0
H(s)hp ≈ hlp/1002	s/2πf0 = 1/100
H(s)hp ≈ hlp/102	s/2πf0 = 1/10
H(s)hp = hlp/d	s/2πf0 = 1
H(s)hp ≈ hhp	s/2πf0 = 10
H(s)hp ≈ hlp	s/2πf0 = 100

Note that the cut off frequency, f_{cutoff}, is defined as the frequency where the output is attenuated by 3 dB. It is not necessarily equal to f_0.

Fortunately, many filter reference books have tables with the necessary roll off and damping values calculated for different types and orders of filters [1].

The high pass transfer function shown in Equation 35 can be implemented two ways.

One method is to take the V_{out1} transfer Equation 7 and set $C1_1$ and C_{pp} to zero. The high pass coefficient is shown in Equation 36.

$$h_{hp1} = -\frac{C_p C_B}{C_A C_B - \frac{1}{2} C_3 C_4 - \frac{1}{4} C_2 C_3}$$

Equation 36

The topology for a PSoC switched capacitor high pass filter in shown in Figure 34.

Figure 34. PSoC Two-Pole High Pass Filter

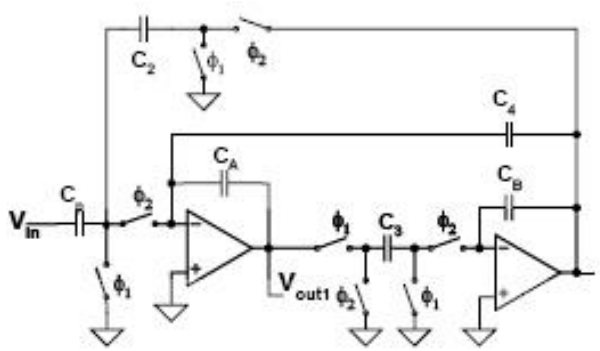

An alternative method is to take the V_{out2} transfer Equation 8 and set C_1 and C_p to zero. The alternative high pass coefficient is shown in Equation 37.

$$h_{hp2} = -\frac{C_{pp}C_A}{C_AC_B - \frac{1}{2}C_3C_4 - \frac{1}{4}C_2C_3}$$

Equation 37

The alternative topology is shown in Figure 35.

Figure 35. Alternative PSoC High Pass Filter

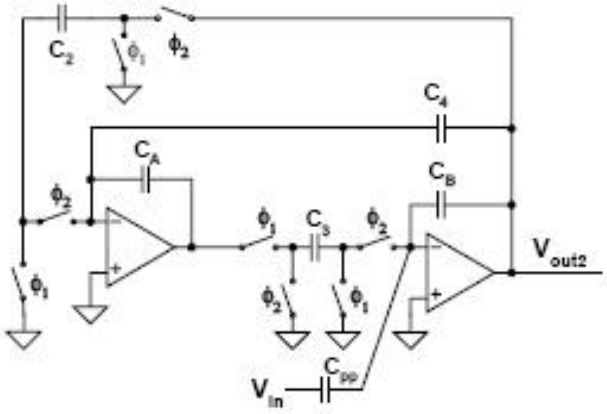

There are no user module implementations in either topology.

13.1 Why Not?

Switched capacitor filters sample the input at some sample frequency, f_s. At the Nyquist limit ($f_s/2$), the signal frequency will start to alias back toward DC. Switched capacitor filters cannot distinguish a DC input from an input at the sampling frequency.

This is not a problem for low pass filters. The Nyquist point, being half the over sample ratio, is far down the attenuation curve. For a 100 over sample two-pole low pass filter, the output signal is down 68 dB at the Nyquist point. It is 56 dB down for a filter with an over sample ratio of 25.

It is just the opposite for a high pass filter. At the Nyquist point, pretty much all the signal is passed through. Signals past the Nyquist frequency are aliased and are generally useless. This limits the bandwidth of a high pass filter to be from the cutoff frequency up to the Nyquist frequency effectively a band pass filter.

This is not unique to PSoC switched capacitor filters. Implementing a well performing high pass filter requires very high over sample ratio (at least several thousand). Hyper large over sample ratios require a large ratio of capacitor sizes. This uses a significant amount silicon area, thus, rendering them economically impractical.

13.2 Notch Filter

A notch filter allows the passing of signals except around a defined median frequency. It is a combination of equal amounts of the low pass and high pass coefficients. The transfer equation for a two-pole notch filter is given in Equation 38.

$$H(s)_{notch} = \frac{h_{hp}\left(\frac{s}{2\pi f_0}\right)^2 + h_{lp}}{\left(\frac{s}{2\pi f_0}\right)^2 + d\left(\frac{s}{2\pi f_0}\right) + 1} : h_{hp} = h_{lp}$$

Equation 38

A plot of a typical notch filter is shown in Figure 36..

Figure 36. Filter Plot-Generated Notch Filter

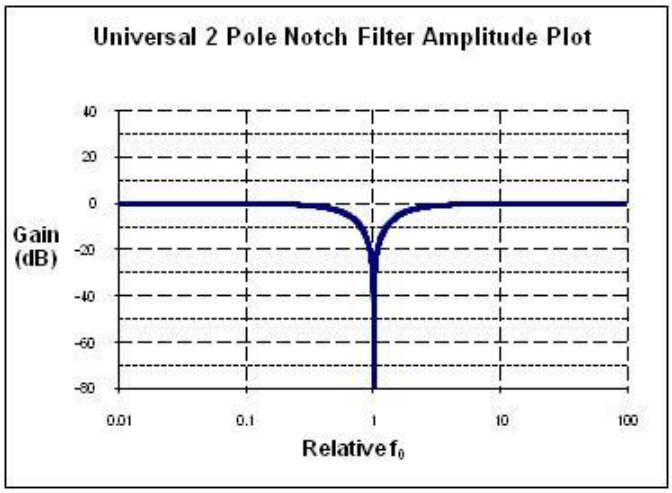

This plot and Table 5 show that the response is zero at f_0. At some distance away from f_0, the signal is passed relatively unattenuated.

Table 5. Selected Points on Notch Transfer Function

Gain	Condition
H(s)notch ≈ h	s/2πf0 = 1/100
H(s)notch ≈ h	s/2πf0 = 1/10
H(s)notch = 0	s/2πf0 = 1
H(s)notch ≈ h	s/2πf0 = 10
H(s)notch ≈ h	s/2πf0 = 100

The bandwidth of the notch is defined as the difference between the upper (fupper) and lower (flower) cutoff frequencies where the amplitude falls 3 dB. The center frequency (**fcenter**) is the geometric mean of these two limits. They are shown in Equations 39 and 40.

$$BW_{notch} = f_{upper} - f_{lower}$$

Equation 39

$$f_{center} = \sqrt{f_{upper} f_{lower}}$$

Equation 40

To calculate the upper and lower cutoff points, the amplitude of Equation 38 is shown in Equation 41.

$$H(f)_{notch} = \frac{h\sqrt{\left(\frac{f_0}{f} - \frac{f}{f_0}\right)^2}}{h\sqrt{\left(\frac{f}{f_0} - \frac{f_0}{f}\right)^2 + d^2}}$$

Equation 41

Equation 42 shows the point where the signal is 3 dB down.

$$H(f)_{notch} = \frac{h}{\sqrt{2}}$$

Equation 42

Equations 40 and 41 are combined to find the two solutions. They are shown in Equation 43 and Equation 44.

$$f_{upper} = f_0 \frac{\sqrt{d^2 + 4} + d}{2}$$

Equation 43

$$f_{lower} = f_0 \frac{\sqrt{d^2 + 4} - d}{2}$$

Equation 44

Substituting the values in Equation 43 and 44 into the center frequency and bandwidth in Equations 39 and 40, results in Equations 45 and 46.

$$f_{center} = f_0 \sqrt{\frac{\sqrt{d^2 + 4} - d}{2} \frac{\sqrt{d^2 + 4} + d}{2}} = f_0$$

Equation 45

$$BW_{bp} = f_0 \frac{\sqrt{d^2 + 4} + d}{2} - f_0 \frac{\sqrt{d^2 + 4} - d}{2} = f_0 d$$

Equation 46

The notch bandwidth is proportional to the damping value. The center frequency is the roll off frequency. The transfer function shown in Equation 38 can made two different ways.

The first is by taking the V_{out2} transfer Equation 8 and setting C_p to zero. This is shown in Equation 47.

$$H(s)_{notch} = \frac{\left(\frac{C_{pp}C_A}{C_2C_3} - \frac{1}{4}\frac{C_1}{C_2}\right)\left(\frac{s}{f_s}\right)^2 + \frac{C_1}{C_2}}{\left(\frac{C_BC_A}{C_2C_3} - \frac{1}{2}\frac{C_4}{C_2} - \frac{1}{4}\right)\left(\frac{s}{f_s}\right)^2 + \frac{C_4}{C_2}\frac{s}{f_s} + 1}$$

Equation 47

The topology for such a filter is shown in Figure 37. The low pass and high pass coefficients are shown in Equation 48.

$$h_{hp2} = \frac{C_{pp}C_A - \frac{1}{4}C_1C_3}{C_BC_A - \frac{1}{2}C_3C_4 - \frac{1}{4}C_2C_3} = h_{lp2} = -\frac{C_1}{C_2}$$

Equation 48

Figure 37. PSoC Two-Pole Notch Filter

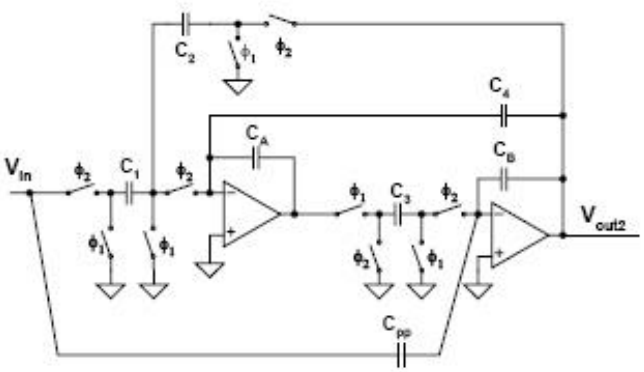

This filter has the advantage of only using two switched capacitor blocks. The disadvantage is that interaction between the two blocks near the roll off frequency keeps it from functioning well for values of Q much greater than one. The second way the notch filter transfer Equation 38 can also be expressed is as the original input minus a band pass filter output. This is shown in Equation 49.

$$H(s)_{notch} = h - \frac{h_{bp}\left(\frac{s}{2\pi f_0}\right)^2}{\left(\frac{s}{2\pi f_0}\right)^2 + d\left(\frac{s}{2\pi f_0}\right) + 1} : h = \frac{h_{bp}}{d}$$

Equation 49

A block diagram of such a filter is shown in Figure 38.

Figure 38. Notch Filter Block Diagram

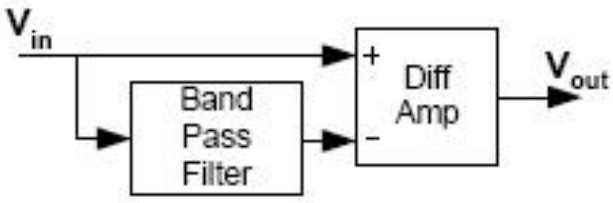

This filter is implemented using a band pass filter plus an additional switched capacitor block functioning as a DiffAmp. It requires an additional block to implement but is more able to implement high Q notch filters.

14 Notch Filter Example

For this example, the alternate band pass example will be modified to include a notch output. The block placement is shown in Figure 39.

Figure 39. Band Pass/Notch Block Placement

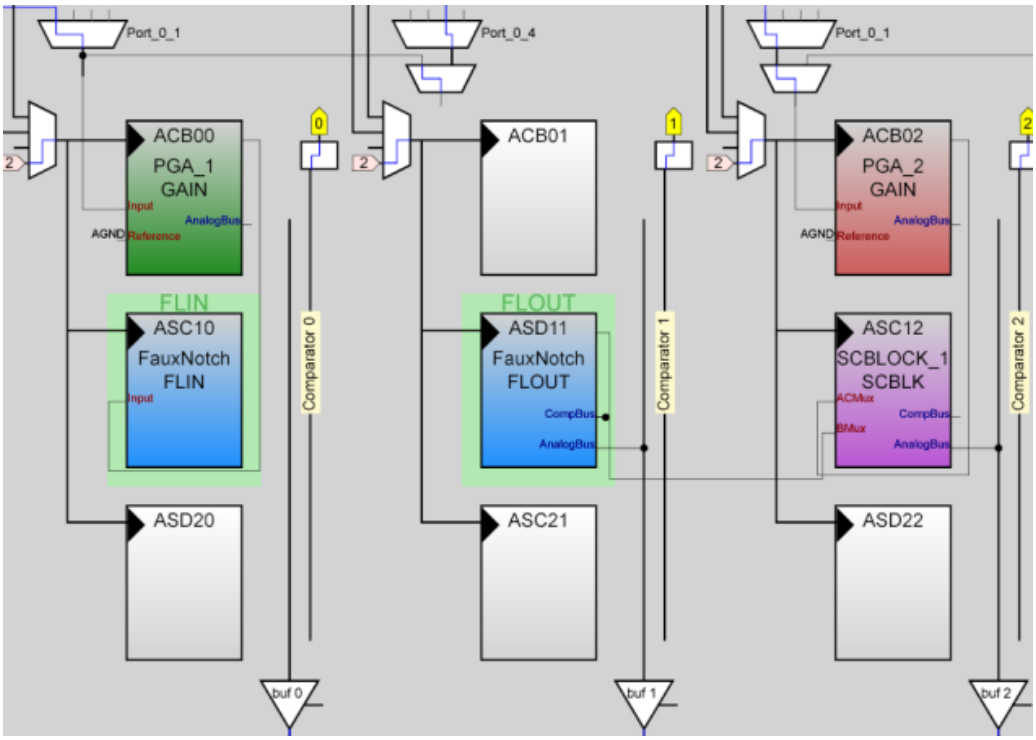

A DiffAmp has been added to subtract the buffer input from the band pass filter output. The parameters for the DiffAmp block are shown in Figure 40.

Figure 40. DiffAmp Parameters

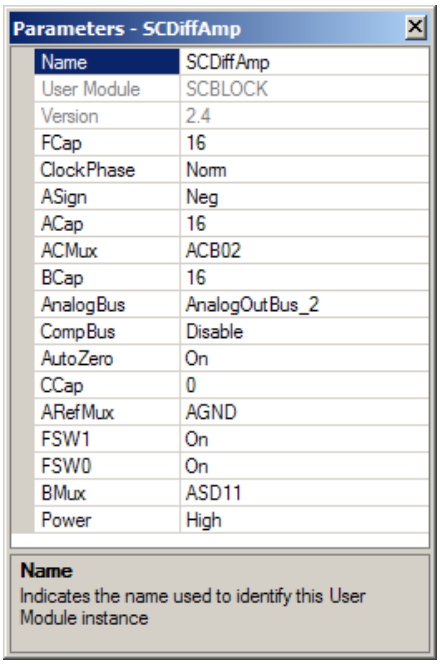

The filter connection is made to the **BCap** input. It is the negative input. The band pass filter inverts the gain so the input into the **ACap** input must be inverted. Setting **ASign** negative does this. The only software change is to start the extra PGA User Module.

Figure 41 is a spectral plot of this filter.

Figure 41. Q=10 Alternate Band Pass Filter Spectral Plot

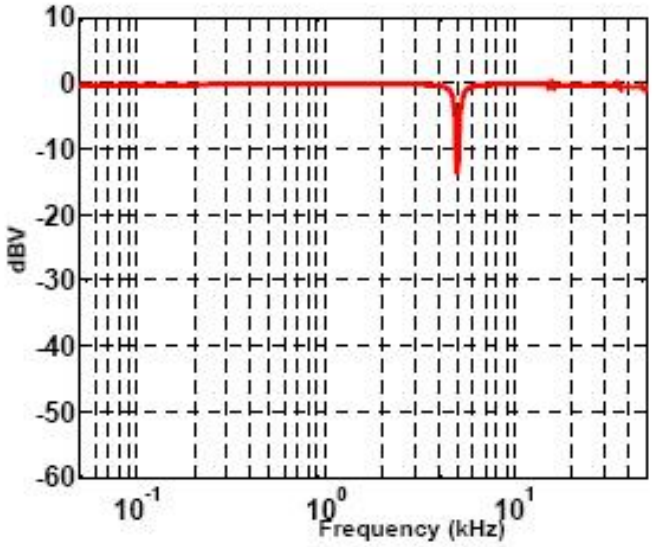

Examination of the plot shows that the signal has a notch at 5 kHz. The 3 dB points are approximately 500 Hz apart. This is consistent for a 5 kHz notch filter with a Q of 10.

15 Elliptical Filter

Similar to the notch filter, an elliptical filter allows the passing of signals only when they are passed around a defined median frequency. The difference is that they are no longer equal amounts of the low pass and high pass coefficients. The transfer equation for a two-pole notch filter is given in Equation 50.

$$H(s)_{elliptical} = \frac{h_{hp}\left(\frac{s}{2\pi f_0}\right)^2 + h_{lp}}{\left(\frac{s}{2\pi f_0}\right)^2 + d\left(\frac{s}{2\pi f_0}\right) + 1} : h_{hp} \neq h_{lp}$$

Equation 50

A plot of a typical elliptical low pass filter is shown in Figure 42.

Figure 42. FilterPlot-Generated Elliptical Low Pass Filter

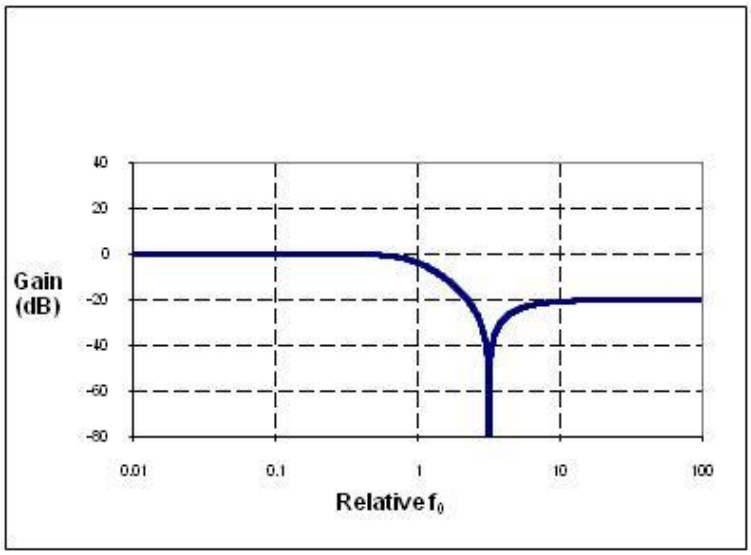

This plot and Table 6 show that the response is zero at points determined by f_0, h_{hp}, and h_{lp}. At some distance away from f_0, the signal is determined by its relative pass coefficient.

Table 6. Selected Points on Elliptical Transfer Function

Gain	Condition
H(s)elliptical ≈ hlp	s/2πf0 = 1/100
H(s)elliptical ≈ hlp	s/2πf0 = 1/10
H(s)elliptical = 0	s/2πf0 = (hlp/hhp)½
H(s)elliptical ≈ hhp	s/2πf0 = 10
H(s)elliptical ≈ hhp	s/2πf0 = 100

Note that an elliptical filter can either be high pass or low pass. At some defined point, the output rapidly drops to zero.

The transfer function shown in Equation 38 can be made two different ways. The first is by taking the V_{out2} transfer Equation 8 and setting C_p to zero. This is shown in Equation 51.

$$H(s)_{elliptical} = \frac{\left(\frac{C_{pp}C_A}{C_2C_3} - \frac{1}{4}\frac{C_1}{C_2}\right)\left(\frac{s}{f_s}\right)^2 + \frac{C_1}{C_2}}{\left(\frac{C_BC_A}{C_2C_3} - \frac{1}{2}\frac{C_4}{C_2} - \frac{1}{4}\right)\left(\frac{s}{f_s}\right)^2 + \frac{C_4}{C_2}\frac{s}{f_s} + 1}$$

Equation 51

The low pass and high pass coefficients are shown in Equation 52.

$$h_{hp2} = \frac{C_{pp}C_A - \frac{1}{4}C_1C_3}{C_BC_A - \frac{1}{2}C_3C_4 - \frac{1}{4}C_2C_3} = h_{lp2} = -\frac{C_1}{C_2}$$

Equation 52

The topology for a PSoC switched capacitor elliptical filter is shown in Figure 43.

Figure 43. PSoC Two Pole Elliptical Filter

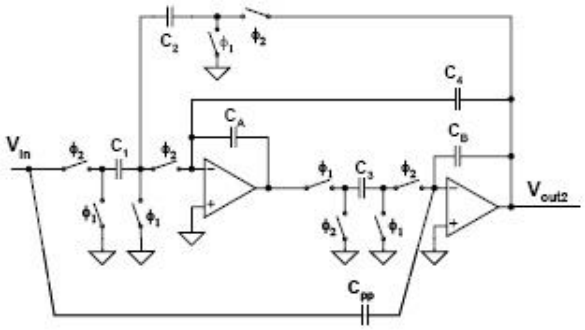

You may notice this topology looks similar to notch filter. The only difference is that the pass coefficients are no longer equal. This filter has the advantage of only using two switched capacitor blocks. The disadvantage is that interaction between the two blocks near the roll off frequency keeps it from functioning well for values of Q much greater than one. Fortunately, when implementing low pass and high pass elliptical filters, the desired Q is most certainly never much larger than one.

16 Elliptical Filter Example

For this example, the Bessel low pass example will be modified to add a high pass coefficient one-tenth the low pass value.

The requirements are:

- Two pole Bessel low pass filer
- Cut off frequency of 5 kHz
- An over sample ratio of 50 (f_s = 250 kHz)
- Unity low pass gain
- -20 dB high pass gain

Standard tables from filter reference books [1] show that the filter is constructed with:

- f_0 = 1.274 * 5 kHz = 6,380 kHz
- d = 1.732

The coefficients calculated for the low pass part were:

- C_1= 3
- C_2 = 3
- C_3 = 8
- C_4 = 31
- C_A = 32
- C_B =32

Substituting the known values into Equation 52 results in Equation 53 with a single unknown variable.

$$h_{hp} = 0.1 = \frac{C_{pp}32 - \frac{1}{4}3 \cdot 8}{32 \cdot 32 - \frac{1}{2}8 \cdot 31 - \frac{1}{4}3 \cdot 8}$$ Equation 53

Solving Equation 53 results in Equation 54.

$$C_{pp} = 2.98 \approx 3$$ Equation 54

Substituting this value into Equation 53 results in the actual coefficient show in Equation 55.

$$h_{hp} = 0.1 = \frac{3 \cdot 32 - \frac{1}{4}3 \cdot 8}{32 \cdot 32 - \frac{1}{2}8 \cdot 31 - \frac{1}{4}3 \cdot 8} = 1.007 \approx .1$$ Equation 55

The block placement is shown in Figure 44.

Figure 44. Elliptical Filter Example Block Placement

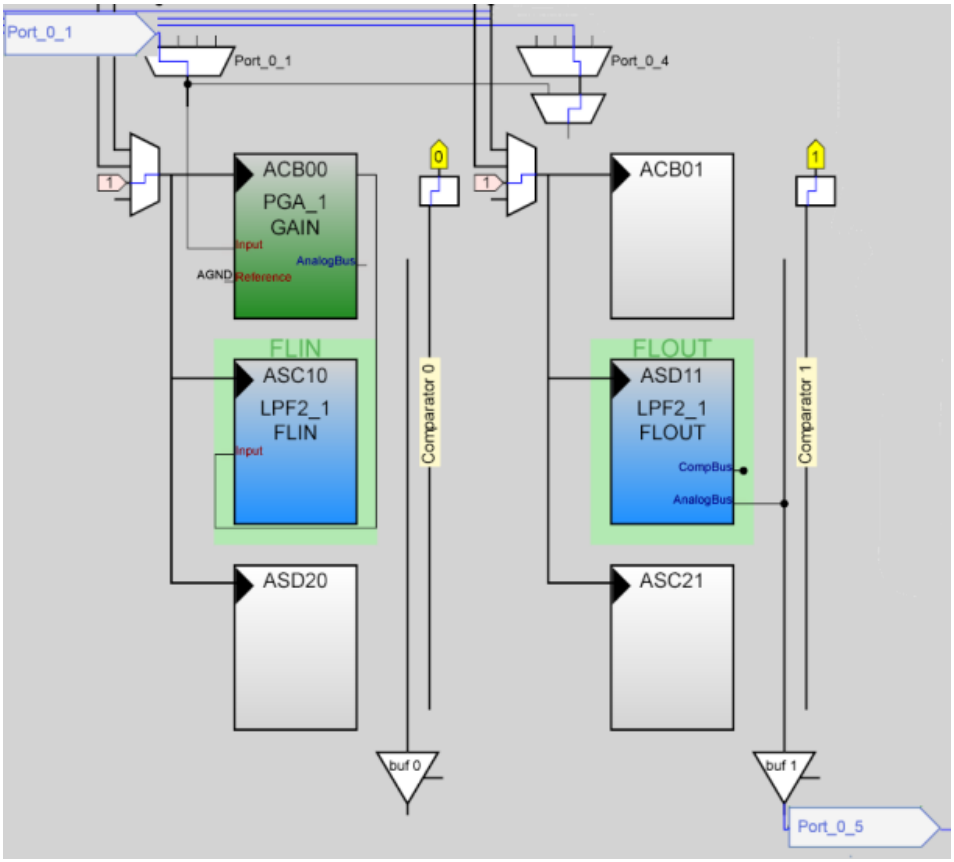

The topology of the elliptical filter is very close to a low pass filter. All that is required to convert the LPF2 User Module to an elliptical filter is to set the value and input connection for C_{pp}. This is done in software.

C_{pp} is the BCap of the filter's output block. It must be connected to the buffer located in ACB0.

The default setting for the input for BCap (C_{pp}) is ACB00. No software is required to connect it.

Example Code 4 shows the program that starts the filter and also configures the BCap (C_{pp}) value.

Code 4

```
void main(void)
{
    PGA_1_Start(PGA_1_HIGHPOWER);
    LPF2_1_Start(LPF2_1_HIGHPOWER);

    ASD11CR1 |= 0x03;

    while(1);
}
```

Figure 45 is a spectral plot of this filter.

Figure 45 Elliptical Low Pass Filter Spectral Plot 1

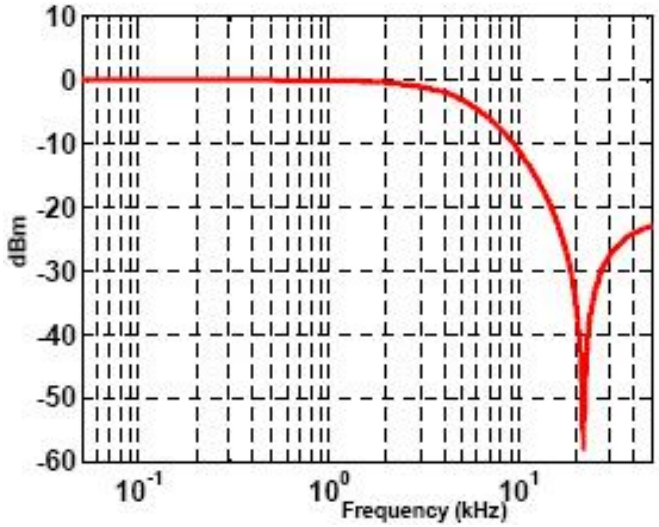

Note that the output goes to zero at about 21 kHz. This is consistent for a filter with f_0 = 6.38 kHz and a low pass-to-high pass ratio of 10 (6380*10½). Frequencies past this notch are a little over 20 dB below the low frequency inputs. Again, this is consistent with the design constraints.

17 Summary

Universal two pole filters are the building blocks of all filters. It can be thought of as having five variables:

- Roll frequency, **f_0**
- Damping Value, **d**
- Low pass coefficient, **h_{lp}**
- Band Pass Coefficient, **h_{bp}**
- High Pass Coefficient, **h_{hp}**

PSoC has the ability to control and implement all five of these variables. These filter blocks can be cascaded together to implement more complex filters. Filter reference books will have tables of damping values and roll off frequencies required to implement more complex filters.

FilterCalc is a program that will assist the user in determining the best possible capacitor values for their specific filter requirements.

Filter design spreadsheets are available with the PSoC Designer documentation. Automated design wizards are available for placed filter modules.

Filter design for a PSoC system is very straight forward given a good filter reference book and the tools shown in this Application Note.

18 References

- Active Filter Cook Book, Don Lancaster, Synergetics Press, 2002

About the Author

Name: Dave Van Ess

Title: Principal Applications Engineer

Document History

Document Title: AN2168 – PSoC® 1 Understanding Switched Capacitor Filters

Document Number: 001-43151

Revision	ECN	Orig. of Change	Submission Date	Description of Change
**	1779508	TDU	11/28/2007	New application note.
*A	3161559	TDU	02/03/2011	Fixed blurry images and equations. Fixed Structure and Grammar issues. Updated Projects to PSoC Designer 5.1.
*B	3433875	QUS	11/09/2011	Template Update Minor Grammatical Edits.
*C	4288471	SEG	02/21/2014	No changes, sunset ECN only
*D	5702223	AESATMP8	04/26/2017	Updated logo and Copyright.
*E	6320750	DIMA	09/25/2018	Updated copyright.

Worldwide Sales and Design Support

Cypress maintains a worldwide network of offices, solution centers, manufacturer's representatives, and distributors. To find the office closest to you, visit us at Cypress Locations.

Products

Arm® Cortex® Microcontrollers	cypress.com/arm
Automotive	cypress.com/automotive
Clocks & Buffers	cypress.com/clocks
Interface	cypress.com/interface
Internet of Things	cypress.com/iot
Memory	cypress.com/memory
Microcontrollers	cypress.com/mcu
PSoC	cypress.com/psoc
Power Management ICs	cypress.com/pmic
Touch Sensing	cypress.com/touch
USB Controllers	cypress.com/usb
Wireless Connectivity	cypress.com/wireless

PSoC® Solutions

PSoC 1 | PSoC 3 | PSoC 4 | PSoC 5LP | PSoC 6 MCU

Cypress Developer Community

Community | Projects | Videos | Blogs | Training | Components

Technical Support

cypress.com/support

All other trademarks or registered trademarks referenced herein are the property of their respective owners.

Cypress Semiconductor
198 Champion Court
San Jose, CA 95134-1709

© Cypress Semiconductor Corporation, 2007-2018. This document is the property of Cypress Semiconductor Corporation and its subsidiaries, including Spansion LLC ("Cypress"). This document, including any software or firmware included or referenced in this document ("Software"), is owned by Cypress under the intellectual property laws and treaties of the United States and other countries worldwide. Cypress reserves all rights under such laws and treaties and does not, except as specifically stated in this paragraph, grant any license under its patents, copyrights, trademarks, or other intellectual property rights. If the Software is not accompanied by a license agreement and you do not otherwise have a written agreement with Cypress governing the use of the Software, then Cypress hereby grants you a personal, non-exclusive, nontransferable license (without the right to sublicense) (1) under its copyright rights in the Software (a) for Software provided in source code form, to modify and reproduce the Software solely for use with Cypress hardware products, only internally within your organization, and (b) to distribute the Software in binary code form externally to end users (either directly or indirectly through resellers and distributors), solely for use on Cypress hardware product units, and (2) under those claims of Cypress's patents that are infringed by the Software (as provided by Cypress, unmodified) to make, use, distribute, and import the Software solely for use with Cypress hardware products. Any other use, reproduction, modification, translation, or compilation of the Software is prohibited.

TO THE EXTENT PERMITTED BY APPLICABLE LAW, CYPRESS MAKES NO WARRANTY OF ANY KIND, EXPRESS OR IMPLIED, WITH REGARD TO THIS DOCUMENT OR ANY SOFTWARE OR ACCOMPANYING HARDWARE, INCLUDING, BUT NOT LIMITED TO, THE IMPLIED WARRANTIES OF MERCHANTABILITY AND FITNESS FOR A PARTICULAR PURPOSE. No computing device can be absolutely secure. Therefore, despite security measures implemented in Cypress hardware or software products, Cypress does not assume any liability arising out of any security breach, such as unauthorized access to or use of a Cypress product. In addition, the products described in these materials may contain design defects or errors known as errata which may cause the product to deviate from published specifications. To the extent permitted by applicable law, Cypress reserves the right to make changes to this document without further notice. Cypress does not assume any liability arising out of the application or use of any product or circuit described in this document. Any information provided in this document, including any sample design information or programming code, is provided only for reference purposes. It is the responsibility of the user of this document to properly design, program, and test the functionality and safety of any application made of this information and any resulting product. Cypress products are not designed, intended, or authorized for use as critical components in systems designed or intended for the operation of weapons, weapons systems, nuclear installations, life-support devices or systems, other medical devices or systems (including resuscitation equipment and surgical implants), pollution control or hazardous substances management, or other uses where the failure of the device or system could cause personal injury, death, or property damage ("Unintended Uses"). A critical component is any component of a device or system whose failure to perform can be reasonably expected to cause the failure of the device or system, or to affect its safety or effectiveness. Cypress is not liable, in whole or in part, and you shall and hereby do release Cypress from any claim, damage, or other liability arising from or related to all Unintended Uses of Cypress products. You shall indemnify and hold Cypress harmless from and against all claims, costs, damages, and other liabilities, including claims for personal injury or death, arising from or related to any Unintended Uses of Cypress products.

Cypress, the Cypress logo, Spansion, the Spansion logo, and combinations thereof, WICED, PSoC, CapSense, EZ-USB, F-RAM, and Traveo are trademarks or registered trademarks of Cypress in the United States and other countries. For a more complete list of Cypress trademarks, visit cypress.com. Other names and brands may be claimed as property of their respective owners.