AN214800

WLBGA SECI Mapping - CYW20710

Associated Part Family: CYW20710

This document provides the recommended serial enhanced coexistence information (SECI) interface mapping of the coex and HOST_WAKE pins for the CYW20710 WLBGA package. Such information is provided for customers who manufacture Bluetooth and WLAN devices.

1 WLBGA SECI Mapping

The CYW43569/CYW43570 supports SECI, which is a serial enhanced coexistence information interface between a Bluetooth (BT) device and a WLAN device. Information of up to 48-bits of coexistence data can be exchanged between the two devices. Information such as frequencies used and radio usage times is exchanged. There are two connections required for the SECI interface:

1. SECI_INSECI serial data input. WLAN ⇒ BT direction.
2. SECI_OUTSECI serial data output. BT ⇒ WLAN direction.

The CYW43569/CYW43570 WLBGA package does not have dedicated pins for the SECI interface. The SECI interface has to be multiplexed onto existing pins. SECI_OUT can be mapped to SPIM_CLK, and SECI_IN mapped to GPIO_1. In addition to the multiplexed SECI signals, the HOST_WAKE signal must be mapped to the SPIM_CS_N pin. HOST_WAKE is typically mapped to GPIO_1 for non-SECI designs. Because most customers use the UART transport for the Host/BT communication, the SPI interface was chosen to multiplex the SECI_OUT and HOST_WAKE signals. Table 1 shows the recommended SECI coexistence and HOST_WAKE pin mapping.

Table 1. Recommended SECI Coexistence and HOST_WAKE Pin Mapping

CYW43569/CYW43570 WLBGA Pin Name	CYW43569/CYW43570 SECI Coexistence Mapping
SPIM_CLK	SECI_OUT
GPIO_1	SECI_IN
SPIM_CS_N	HOST_WAKE

Figure 1 shows the BT to WLAN SECI block interface diagram.

Figure 1. BT to WLAN SECI Interface Block Diagram

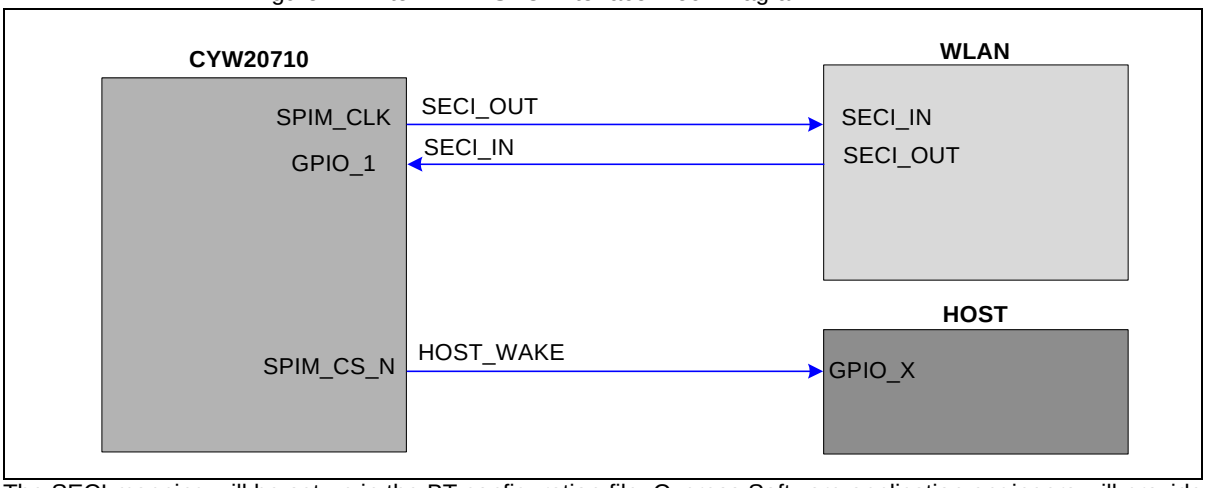

The SECI mapping will be set up in the BT configuration file. Cypress Software application engineers will provide the customer this configuration file that has the SECI mapping and any specific customer settings.

2 Cypress Part Numbering Scheme

Cypress is converting the acquired IoT part numbers from Broadcom to the Cypress part numbering scheme. Due to this conversion, there is no change in form, fit, or function as a result of offering the device with Cypress part number marking. The table provides Cypress ordering part number that matches an existing IoT part number.

Table 2. Mapping Table for Part Number between Broadcom and Cypress

Broadcom Part Number	Cypress Part Number
BCM43569	**CYW43569**
BCM43570	**CYW43570**
BCM20710	**CYW20710**

3 IoT Resources

Cypress provides a wealth of data at http://www.cypress.com/internet-things-iot to help you to select the right IoT device for your design, and quickly and effectively integrate the device into your design. Cypress provides customer access to a wide range of information, including technical documentation, schematic diagrams, product bill of materials, PCB layout information, and software updates. Customers can acquire technical documentation and software from the Cypress Support Community website (http://community.cypress.com/).

Document History

Document Title: AN214800 - WLBGA SECI Mapping - CYW20710 Document Number: 002-14800				
Revision	**ECN**	**Orig. of Change**	**Submission Date**	**Description of Change**
**	–	UTSV	01/12/11	20710-AN100-R Initial release
*A	5451048	UTSV	09/29/2016	Updated to Cypress Template
*B	5834940	BENV	07/27/2017	Updated logo and copyright

Sales, Solutions, and Legal Information

Worldwide Sales and Design Support

Cypress maintains a worldwide network of offices, solution centers, manufacturer's representatives, and distributors. To find the office closest to you, visit us at Cypress Locations.

Products

ARM® Cortex® Microcontrollers	cypress.com/arm
Automotive	cypress.com/automotive
Clocks & Buffers	cypress.com/clocks
Interface	cypress.com/interface
Internet of Things	cypress.com/iot
Memory	cypress.com/memory
Microcontrollers	cypress.com/mcu
PSoC	cypress.com/psoc
Power Management ICs	cypress.com/pmic
Touch Sensing	cypress.com/touch
USB Controllers	cypress.com/usb
Wireless Connectivity	cypress.com/wireless

PSoC®Solutions

PSoC 1 | PSoC 3 | PSoC 4 | PSoC 5LP | PSoC 6

Cypress Developer Community

Forums | WICED IOT Forums | Projects | Video | Blogs | Training | Components

Technical Support

cypress.com/support

Cypress Semiconductor
198 Champion Court
San Jose, CA 95134-1709

© Cypress Semiconductor Corporation, 2011-2017. This document is the property of Cypress Semiconductor Corporation and its subsidiaries, including Spansion LLC ("Cypress"). This document, including any software or firmware included or referenced in this document ("Software"), is owned by Cypress under the intellectual property laws and treaties of the United States and other countries worldwide. Cypress reserves all rights under such laws and treaties and does not, except as specifically stated in this paragraph, grant any license under its patents, copyrights, trademarks, or other intellectual property rights. If the Software is not accompanied by a license agreement and you do not otherwise have a written agreement with Cypress governing the use of the Software, then Cypress hereby grants you a personal, non-exclusive, nontransferable license (without the right to sublicense) (1) under its copyright rights in the Software (a) for Software provided in source code form, to modify and reproduce the Software solely for use with Cypress hardware products, only internally within your organization, and (b) to distribute the Software in binary code form externally to end users (either directly or indirectly through resellers and distributors), solely for use on Cypress hardware product units, and (2) under those claims of Cypress's patents that are infringed by the Software (as provided by Cypress, unmodified) to make, use, distribute, and import the Software solely for use with Cypress hardware products. Any other use, reproduction, modification, translation, or compilation of the Software is prohibited.

TO THE EXTENT PERMITTED BY APPLICABLE LAW, CYPRESS MAKES NO WARRANTY OF ANY KIND, EXPRESS OR IMPLIED, WITH REGARD TO THIS DOCUMENT OR ANY SOFTWARE OR ACCOMPANYING HARDWARE, INCLUDING, BUT NOT LIMITED TO, THE IMPLIED WARRANTIES OF MERCHANTABILITY AND FITNESS FOR A PARTICULAR PURPOSE. To the extent permitted by applicable law, Cypress reserves the right to make changes to this document without further notice. Cypress does not assume any liability arising out of the application or use of any product or circuit described in this document. Any information provided in this document, including any sample design information or programming code, is provided only for reference purposes. It is the responsibility of the user of this document to properly design, program, and test the functionality and safety of any application made of this information and any resulting product. Cypress products are not designed, intended, or authorized for use as critical components in systems designed or intended for the operation of weapons, weapons systems, nuclear installations, life-support devices or systems, other medical devices or systems (including resuscitation equipment and surgical implants), pollution control or hazardous substances management, or other uses where the failure of the device or system could cause personal injury, death, or property damage ("Unintended Uses"). A critical component is any component of a device or system whose failure to perform can be reasonably expected to cause the failure of the device or system, or to affect its safety or effectiveness. Cypress is not liable, in whole or in part, and you shall and hereby do release Cypress from any claim, damage, or other liability arising from or related to all Unintended Uses of Cypress products. You shall indemnify and hold Cypress harmless from and against all claims, costs, damages, and other liabilities, including claims for personal injury or death, arising from or related to any Unintended Uses of Cypress products.

Cypress, the Cypress logo, Spansion, the Spansion logo, and combinations thereof, WICED, PSoC, CapSense, EZ-USB, F-RAM, and Traveo are trademarks or registered trademarks of Cypress in the United States and other countries. For a more complete list of Cypress trademarks, visit cypress.com. Other names and brands may be claimed as property of their respective owners.