The following document contains information on Cypress products. The document has the series name, product name, and ordering part numbering with the prefix “MB”. However, Cypress will offer these products to new and existing customers with the series name, product name, and ordering part number with the prefix “CY”.

How to Check the Ordering Part Number

1. Go to www.cypress.com/pcn.
2. Enter the keyword (for example, ordering part number) in the **SEARCH PCNS** field and click **Apply**.
3. Click the corresponding title from the search results.
4. Download the Affected Parts List file, which has details of all changes

For More Information

Please contact your local sales office for additional information about Cypress products and solutions.

About Cypress

Cypress is the leader in advanced embedded system solutions for the world's most innovative automotive, industrial, smart home appliances, consumer electronics and medical products. Cypress' microcontrollers, analog ICs, wireless and USB-based connectivity solutions and reliable, high-performance memories help engineers design differentiated products and get them to market first. Cypress is committed to providing customers with the best support and development resources on the planet enabling them to disrupt markets by creating new product categories in record time. To learn more, go to www.cypress.com.

AN205563

F²MC-8FX Family MB95200 Series 8-Bit Microcontroller BLDC Motor Fundamentals and Simple Control

Associated Part Family: MB95200 Series

This is a short document to introduce the fundamentals of BLDC (Brushless DC) motor and to explain how to control it by using microcontroller.

1 Introduction

This is a short document to introduce the fundamentals of BLDC (Brushless DC) motor and to explain how to control it by using microcontroller.

2 Fundamentals of BLDC Motor

This section introduces BLDC motor background including application field and structure.

2.1 BLDC Motor Application

Brushless motors are generally used in a wide variety of applications. They have well durability, dynamic and silent performance, and can output high torque and high power with less weight/volume, so BLDC motor is more popular than brushed DC or universal motors in many home application fields, such as air-condition, washing machine and so on.

Brushless permanent magnet motors also can be used in high-end servo drivers. Through using microcontroller with suitable control software, the servo can achieve high-performance control loops in servo systems.

2.2 BLDC Structure

Below is a typical BLDC motor structure block diagram.

Figure 1. BLDC Motor Structure

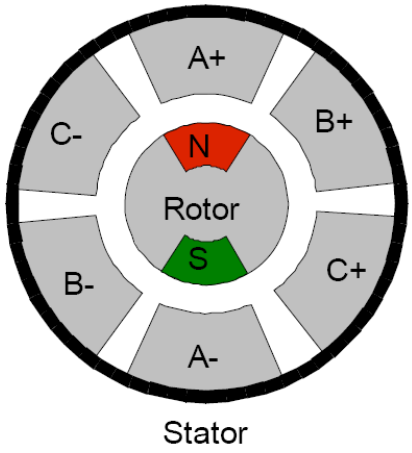

The basic structure of a BLDC motor is some similar to a usual brushed DC motor. In both of BLDC motor and usual DC motor, the rotor contains the permanent magnets and the stator contains the phase windings, but the mechanical commutator in usual brushed DC motor is replaced by the electronic commutator for BLDC motor.

The updated structure can save motor space in the motor and solve the problems caused by the mechanical commutator's brushes, like brush wear, abrasion and arcs. Additionally, the BLDC motor can dissipate heat much effectively because of the lower thermal resistance of the windings to the housing. Also, the complete motor can be sealed (e.g. a pump) or even run directly in liquids (e.g. a compressor).

However, BLDC motor needs the microcontrollers and power electronics for the electronic commutation. Most BLDC motors are equipped with three Hall sensors for rotor position feedback. They can detect the rotor position within 60° degree precision. For more precise position measurement, please use optical encoders.

While the motor is rolling, the rotor permanent magnets will induce a voltage which exists in the stator phase windings, this voltage is also called back-EMF (Electro-Magnetic Force). In many BLDC motors, the back-EMF has a nearly trapezoidal shape which is suitable to be driven by six-step commutation solution, but some 'pure' synchronous motors have a nearly sine-wave back-EMF shape which is suitable to be driven by using space vector modulation solution.

The BLDC motor is also known for other names, such as Electronically Commutated (EC) motor, PMSM (Permanent Magnet Synchronous Motor) or Brushless AC motor. Usually, 'EC' or 'BLDC motor' means the block-commutated with trapezoidal back-EMF voltages. Its behavior is very similar to a brushed DC motor. PMSM or PMAC mostly means the motor with sinusoidal back-EMF. It almost has no torque ripples and has a very high performance.

3 BLDC Simple Control

This section explains a simple control principle, and gives the control logic waveform.

3.1 Simple Control Principle

Usually, BLDC motor stator has three phase windings called U, V, W; each of them has two terminals called U and U', V and V', W and W'. Usually, the three phase windings are star connection, it means that U' and V' and W' are connect together.

Below is the simple block diagram for BLDC motor stator connection.

Figure 2. BLDC Motor Stator Connection

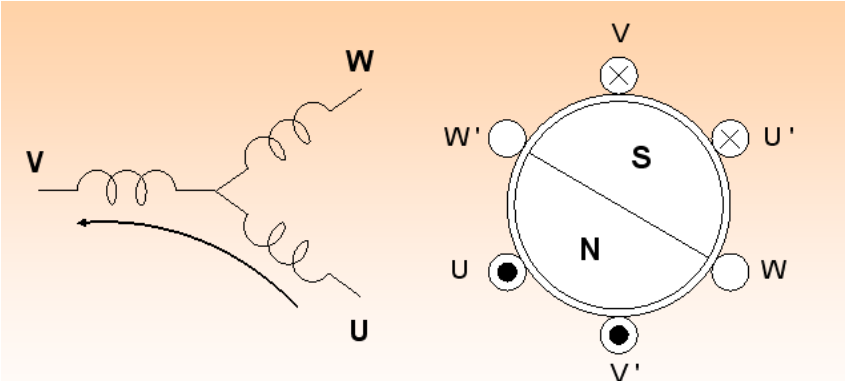

As show in the block diagram above, if the voltage is input from U to U', and from V' to V, the current will pass through U to V. Then, the magnet field will be inducted in stator caused by the voltage, and rotor will rotate following the magnet field until their rotation timings become synchronous.

If we change the voltage rotation in stator phase, the stator magnet and the rotor also will change the rotation. As show in the picture below, there are total six types for stator voltage allocation, each of them can let rotor to rotate 60 degree. If each type of the stator voltage is sent in sequence, the motor will rotate 360 degree as a whole cycle.

Figure 3. Whole Cycle Stator Voltage

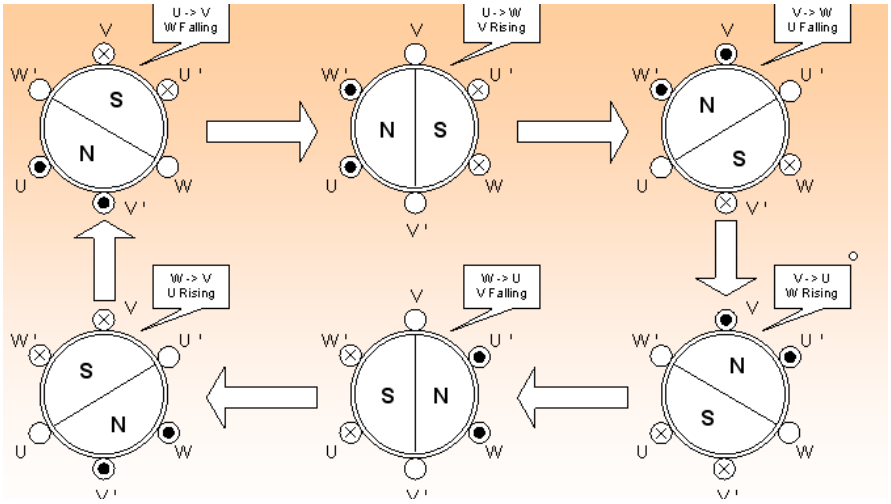

This control method is called block commutation (also known as six-step or 120 degree trapezoidal drive). It is can be implement easily by microcontrollers, especially when the motor has Hall sensors. In this case, every slope on a Hall sensor signal triggers the next commutation.

3.2 System Block

Below is the simple BLDC motor control system HW Block Diagram. It includes MCU, Power module and BLDC Motor.

MCU control the Power Module through six driver signals. Power module is a full-bridge inverter and can be used to transfer DC power to three-phase BLDC Motor.

Figure 4. BLDC Motor System HW Block Diagram

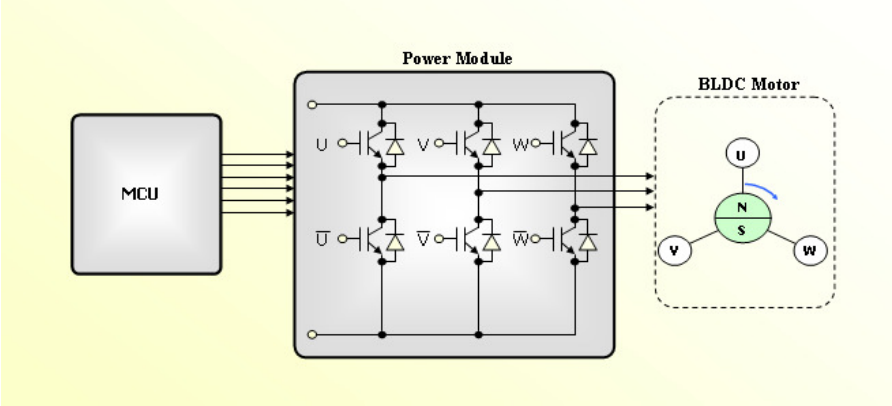

As analyzed from 3.1. Simple Control Principle, we need to output six-step driving voltage, below is the six-step driving waveform diagram.

The six MCU driving pins are PWM1H, PWM1L, PWM2H, PWM2L, PWM3H, PWM3L, we only need to output the driving signal follow the diagram sequence.

Phase U, Phase V, Phase W are output voltage to motor from Power Module, after the driving signal is generated by MCU according to the diagram sequence.

Figure 5. BLDC Motor Driving Waveform

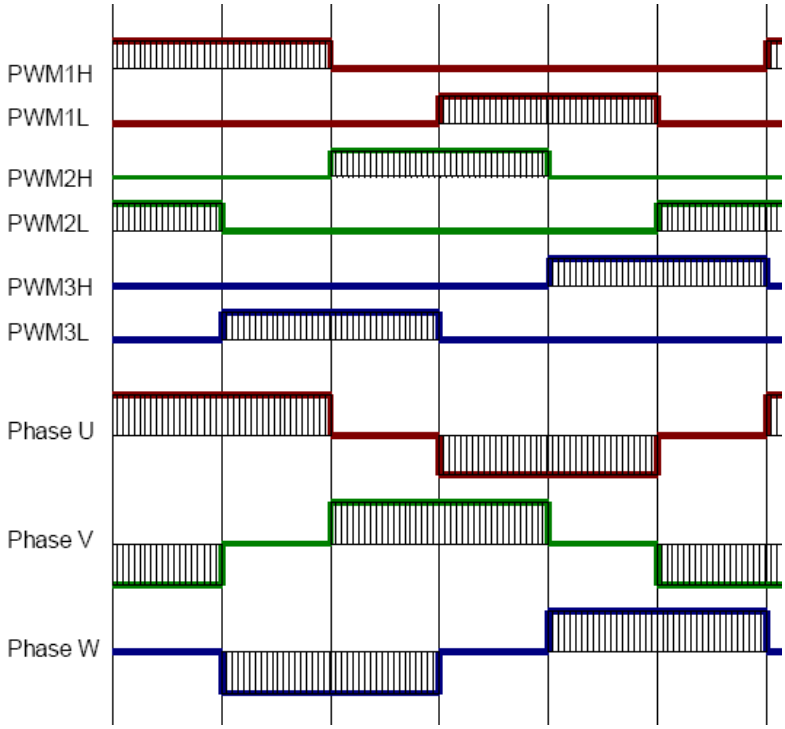

4 Additional Information

For more Information on Cypress MB95200 products, please visit the following website:

http://www.cypress.com/MB95200

Document History

Document Title: AN205563 – F²MC-8FX Family MB95200 Series 8-Bit Microcontroller BLDC Motor Fundamentals and Simple Control

Document Number: 002-05563

Revision	ECN	Orig. of Change	Submission Date	Description of Change
**	-	HUAL	04/03/2009	Initial release
			04/09/2009	Modify according Document Feedback
*A	5279167	HUAL	05/04/2016	Migrated Spansion Application Note MCU-AN-500043-E-11 to Cypress format.

Worldwide Sales and Design Support

Cypress maintains a worldwide network of offices, solution centers, manufacturer's representatives, and distributors. To find the office closest to you, visit us at Cypress Locations.

Products

ARM® Cortex® Microcontrollers	cypress.com/arm
Automotive	cypress.com/automotive
Clocks & Buffers	cypress.com/clocks
Interface	cypress.com/interface
Lighting & Power Control	cypress.com/powerpsoc
Memory	cypress.com/memory
PSoC	cypress.com/psoc
Touch Sensing	cypress.com/touch
USB Controllers	cypress.com/usb
Wireless/RF	cypress.com/wireless

PSoC® Solutions

PSoC 1 | PSoC 3 | PSoC 4 | PSoC 5LP

Cypress Developer Community

Forums | Projects | Videos | Blogs | Training | Components

Technical Support

cypress.com/support

PSoC is a registered trademark and PSoC Creator is a trademark of Cypress Semiconductor Corporation. All other trademarks or registered trademarks referenced herein are the property of their respective owners.

Cypress Semiconductor
198 Champion Court
San Jose, CA 95134-1709

Phone : 408-943-2600
Fax : 408-943-4730
Website : www.cypress.com

© Cypress Semiconductor Corporation, 2009-2016. This document is the property of Cypress Semiconductor Corporation and its subsidiaries, including Spansion LLC ("Cypress"). This document, including any software or firmware included or referenced in this document ("Software"), is owned by Cypress under the intellectual property laws and treaties of the United States and other countries worldwide. Cypress reserves all rights under such laws and treaties and does not, except as specifically stated in this paragraph, grant any license under its patents, copyrights, trademarks, or other intellectual property rights. If the Software is not accompanied by a license agreement and you do not otherwise have a written agreement with Cypress governing the use of the Software, then Cypress hereby grants you a personal, non-exclusive, nontransferable license (without the right to sublicense) (1) under its copyright rights in the Software (a) for Software provided in source code form, to modify and reproduce the Software solely for use with Cypress hardware products, only internally within your organization, and (b) to distribute the Software in binary code form externally to end users (either directly or indirectly through resellers and distributors), solely for use on Cypress hardware product units, and (2) under those claims of Cypress's patents that are infringed by the Software (as provided by Cypress, unmodified) to make, use, distribute, and import the Software solely for use with Cypress hardware products. Any other use, reproduction, modification, translation, or compilation of the Software is prohibited.
TO THE EXTENT PERMITTED BY APPLICABLE LAW, CYPRESS MAKES NO WARRANTY OF ANY KIND, EXPRESS OR IMPLIED, WITH REGARD TO THIS DOCUMENT OR ANY SOFTWARE OR ACCOMPANYING HARDWARE, INCLUDING, BUT NOT LIMITED TO, THE IMPLIED WARRANTIES OF MERCHANTABILITY AND FITNESS FOR A PARTICULAR PURPOSE. To the extent permitted by applicable law, Cypress reserves the right to make changes to this document without further notice. Cypress does not assume any liability arising out of the application or use of any product or circuit described in this document. Any information provided in this document, including any sample design information or programming code, is provided only for reference purposes. It is the responsibility of the user of this document to properly design, program, and test the functionality and safety of any application made of this information and any resulting product. Cypress products are not designed, intended, or authorized for use as critical components in systems designed or intended for the operation of weapons, weapons systems, nuclear installations, life-support devices or systems, other medical devices or systems (including resuscitation equipment and surgical implants), pollution control or hazardous substances management, or other uses where the failure of the device or system could cause personal injury, death, or property damage ("Unintended Uses"). A critical component is any component of a device or system whose failure to perform can be reasonably expected to cause the failure of the device or system, or to affect its safety or effectiveness. Cypress is not liable, in whole or in part, and you shall and hereby do release Cypress from any claim, damage, or other liability arising from or related to all Unintended Uses of Cypress products. You shall indemnify and hold Cypress harmless from and against all claims, costs, damages, and other liabilities, including claims for personal injury or death, arising from or related to any Unintended Uses of Cypress products.
Cypress, the Cypress logo, Spansion, the Spansion logo, and combinations thereof, PSoC, CapSense, EZ-USB, F-RAM, and Traveo are trademarks or registered trademarks of Cypress in the United States and other countries. For a more complete list of Cypress trademarks, visit cypress.com. Other names and brands may be claimed as property of their respective owners.