AN205455

F²MC-8FX Family, MB95200 Series Beeper Development Using Composite Timer

This application note introduces how to drive a beeper using the MB95200 series MCU composite timer.

1 Introduction

This application note introduces how to drive a beeper using the MB95200 series MCU composite timer.

Chapter 1 gives a brief introduction to the beeper.

Chapter 2 explains how to drive a beeper using the composite timer.

The last chapter illustrates a beeper driven by the composite timer with an example.

2 What is a Beeper

This chapter gives a brief introduce to the beeper.

A beeper or buzzer is a signaling device, typically used in automobiles, household appliances such as a microwave oven. It most commonly consists of a number of switches or sensors connected to a control unit that determines if and which button has been pushed or a preset time has lapsed, and usually illuminates a light on the appropriate button or control panel, and sounds a warning in the form of a continuous or intermittent buzzing or beeping sound.

A beeper can be either a piezo beeper or a magnetic beeper. Both include the self drive type and external drive type.

3 Mechanism of Beeper

This chapter introduces how to develop a beeper using the composite timer.

3.1 Composite Timer

The composite timer of MB95200 series can drive a beeper. The 8/16-bit composite timer consists of two 8-bit counters. It can be used as two 8-bit timers or as a 16-bit timer if the two counters are connected in cascade.

The 8/16-bit composite timer has the following functions:

- Interval timer function
- PWM timer function
- PWC timer function (pulse width measurement)
- Input capture function

3.2 Beeper Driven by PWM Timer Function

Though both the interval timer function (but one-shot mode) and the PWM timer function of the composite timer can drive a beeper, this chapter only focuses on the beeper driven by the PWM timer function, because the PWM-driven beeper operates better.

3.2.1 Hardware Connection

The hardware connection is shown as below.

Figure 1. External Drive Type

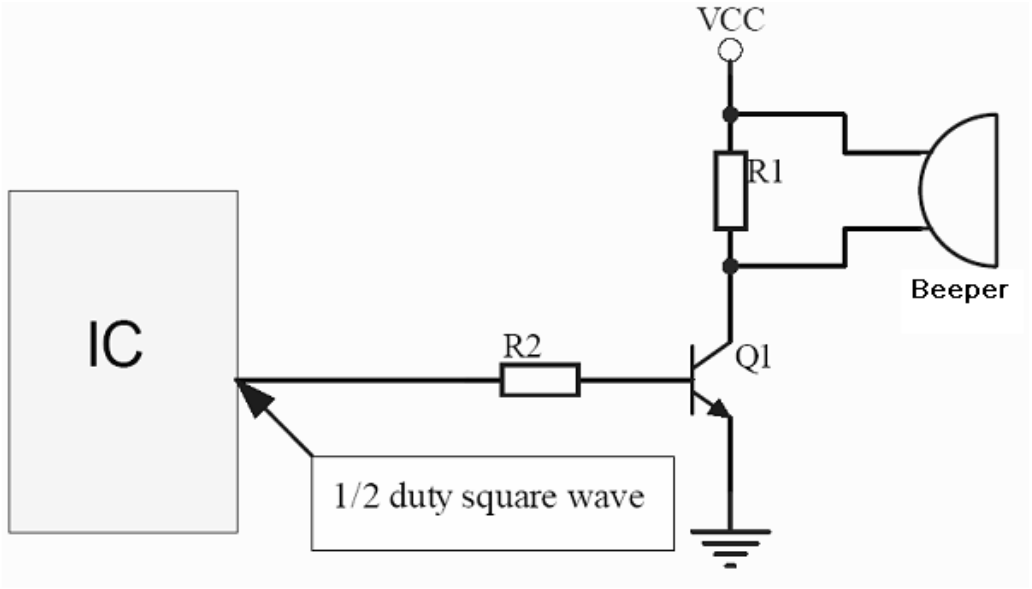

Figure 2. Self Drive Type

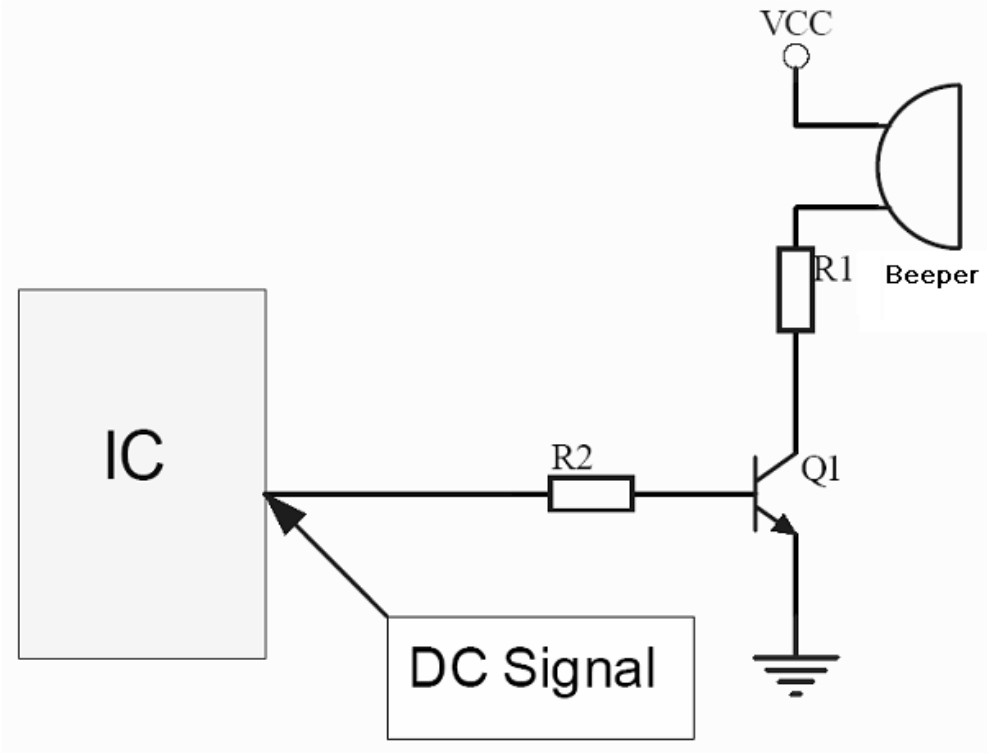

Cypress offers the evaluation board of MB95200/210 EV-Board V1.5 which is embedded with a beeper (PKM13EPYH4002-B0). The diagram is shown as below.

Figure 3. Beeper on Evaluation Board

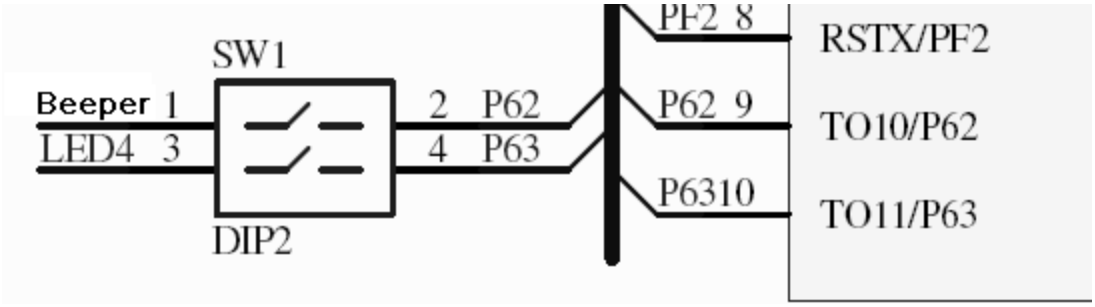

Note: Please close the SW1 when using the beeper.

3.2.2 Setting Register

When the PWM timer function (fixed-cycle mode) is selected, a PWM signal with a variable "H" pulse width is generated in fixed cycles. The cycle is fixed to "FFH" during 8-bit operation or "FFFFH" during 16-bit operation. The time is determined by the count clock selected. The "H" pulse width is specified by setting a register.

The compound timer requires the settings shown in Figure 4 to serve as the PWM timer function (fixed-cycle mode).

Figure 4. Composite Timer Register

	bit7	bit6	bit5	bit4	bit3	bit2	bit1	bit0
T00CR0/T01CR0	IFE	C2	C1	C0	F3	F2	F1	F0
	❍	❍	❍	❍	0	0	1	1
T00CR1/T01CR1	STA	HO	IE	IR	BF	IF	SO	OE
	1	❍	×	×	×	×	×	×
TMCR0	TO1	TO0	IIS	MOD	FE11	FE10	FE01	FE00
	❍	❍	×	❍	❍	❍	❍	❍
T00DR/T01DR	Sets "H" pulse width (compare value)							

❍: Used bit
×: Unused bit
1: Set "1"
0: Set "0"

In PWM timer function (fixed-cycle mode), a fixed cycle PWM signal in a variable "H" pulse width is outputted from the timer output pin (TO00/TO01). The cycle is fixed to "FFH" in 8-bit operation or "FFFFH" in 16-bit operation. The time is determined by the count clock selected. The "H" pulse width is specified by the value in the 8/16-bit compound timer 00/01 data register (T00DR/T01DR). This function has no effect on the interrupt flag (T00CR1/T01CR1:IF). As each cycle always starts with "H" pulse output, the timer output initial value setting bit (T00CR1/T01CR1:SO) is meaningless. The value of the 8/16-bit compound timer 00/01 data register (T00DR/T01DR) is transferred to the temporary storage latch (comparison data storage latch) in the comparator either when the counter starts counting or when a counter value comparison match is detected. When the timer stops operation, the timer output bit (TMCR0:TO0/TO1) holds the last value. The "H" pulse is one count clock shorter than the setting value in the output waveform immediately after activation of the timer (write "1" to the STA bit).

3.2.3 Sound Frequency Outputted

Below is the sound frequency outputted by the PKM13EPYH4002-B0.

Figure 5. Frequency

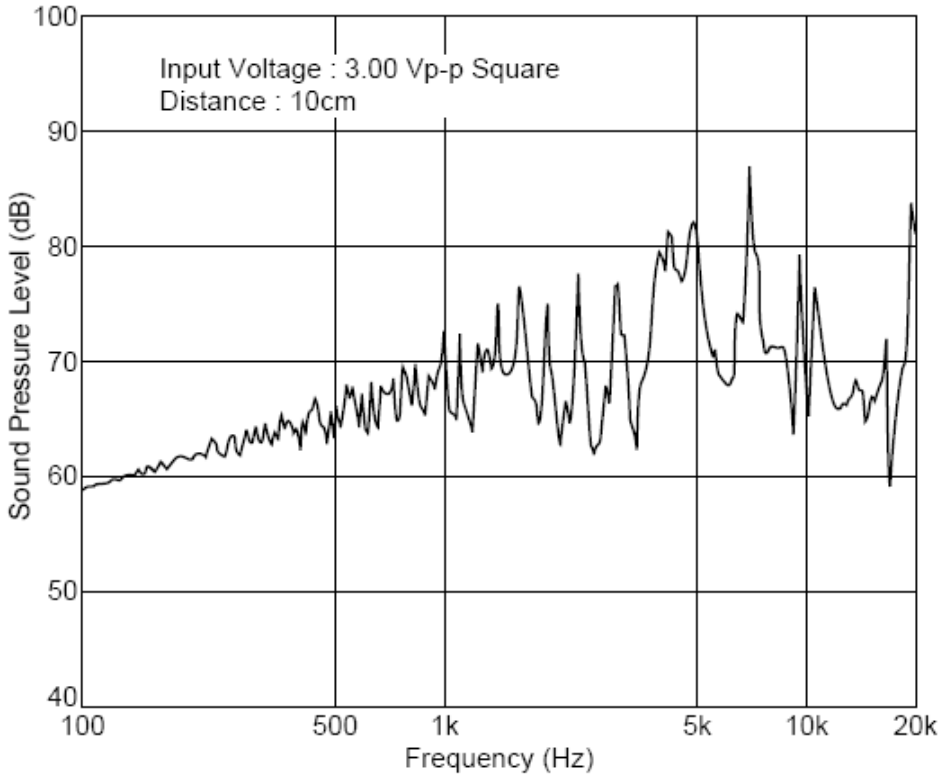

4 Sample Code

This chapter uses an example to illustrate how to drive a beeper with the composite timer.

The following code is based on MB2146-08-E and is intended to illustrate how to drive a beeper with PWM.

```
/* Give a example for basic I/O matrix */
#include "_mb95200.h"
void main(void)
{
       T10CR0=0xA3;         //timer10 as PWM; count clock = 8 MCLK/4= 2MHz
       T10CR1=0x20;         //timer10 output disable
       TMCR1=0x00;
       T10DR=250;           //interval time = 250/2MHz=125us
       T10CR1_STA=1;        //start timer10
       T10CR1_OE=1;         //output enable
       while(1)
       {
              WDTC=0x35; //Clear watch dog timer
       }
}
```

5 Additional Information

For more Information on MB95200 Beep design using composite timer, visit the following website:

http://www.cypress.com/8fx-mb95200

Document History

Document Title: AN205455 - F²MC-8FX Family, MB95200 Series Beeper Development using Composite Timer

Document Number: 002-05455

Revision	ECN	Orig. of Change	Submission Date	Description of Change
**	-	HUAL	04/14/2009	Initial release
*A	5264563	HUAL	06/01/2016	Migrated Spansion Application Note MCU-AN-500031-E-10 to Cypress format
*B	5850781	MALI	08/11/2017	Updated logo and copyright

Worldwide Sales and Design Support

Cypress maintains a worldwide network of offices, solution centers, manufacturer's representatives, and distributors. To find the office closest to you, visit us at Cypress Locations.

Products

ARM® Cortex® Microcontrollers	cypress.com/arm
Automotive	cypress.com/automotive
Clocks & Buffers	cypress.com/clocks
Interface	cypress.com/interface
Internet of Things	cypress.com/iot
Memory	cypress.com/memory
Microcontrollers	cypress.com/mcu
PSoC	cypress.com/psoc
Power Management ICs	cypress.com/pmic
Touch Sensing	cypress.com/touch
USB Controllers	cypress.com/usb
Wireless Connectivity	cypress.com/wireless

PSoC® Solutions

PSoC 1 | PSoC 3 | PSoC 4 | PSoC 5LP | PSoC 6

Cypress Developer Community

Forums | WICED IOT Forums | Projects | Videos | Blogs | Training | Components

Technical Support

cypress.com/support

All other trademarks or registered trademarks referenced herein are the property of their respective owners.

Cypress Semiconductor
198 Champion Court
San Jose, CA 95134-1709

© Cypress Semiconductor Corporation, 2009-2017. This document is the property of Cypress Semiconductor Corporation and its subsidiaries, including Spansion LLC ("Cypress"). This document, including any software or firmware included or referenced in this document ("Software"), is owned by Cypress under the intellectual property laws and treaties of the United States and other countries worldwide. Cypress reserves all rights under such laws and treaties and does not, except as specifically stated in this paragraph, grant any license under its patents, copyrights, trademarks, or other intellectual property rights. If the Software is not accompanied by a license agreement and you do not otherwise have a written agreement with Cypress governing the use of the Software, then Cypress hereby grants you a personal, non-exclusive, nontransferable license (without the right to sublicense) (1) under its copyright rights in the Software (a) for Software provided in source code form, to modify and reproduce the Software solely for use with Cypress hardware products, only internally within your organization, and (b) to distribute the Software in binary code form externally to end users (either directly or indirectly through resellers and distributors), solely for use on Cypress hardware product units, and (2) under those claims of Cypress's patents that are infringed by the Software (as provided by Cypress, unmodified) to make, use, distribute, and import the Software solely for use with Cypress hardware products. Any other use, reproduction, modification, translation, or compilation of the Software is prohibited.

TO THE EXTENT PERMITTED BY APPLICABLE LAW, CYPRESS MAKES NO WARRANTY OF ANY KIND, EXPRESS OR IMPLIED, WITH REGARD TO THIS DOCUMENT OR ANY SOFTWARE OR ACCOMPANYING HARDWARE, INCLUDING, BUT NOT LIMITED TO, THE IMPLIED WARRANTIES OF MERCHANTABILITY AND FITNESS FOR A PARTICULAR PURPOSE. To the extent permitted by applicable law, Cypress reserves the right to make changes to this document without further notice. Cypress does not assume any liability arising out of the application or use of any product or circuit described in this document. Any information provided in this document, including any sample design information or programming code, is provided only for reference purposes. It is the responsibility of the user of this document to properly design, program, and test the functionality and safety of any application made of this information and any resulting product. Cypress products are not designed, intended, or authorized for use as critical components in systems designed or intended for the operation of weapons, weapons systems, nuclear installations, life-support devices or systems, other medical devices or systems (including resuscitation equipment and surgical implants), pollution control or hazardous substances management, or other uses where the failure of the device or system could cause personal injury, death, or property damage ("Unintended Uses"). A critical component is any component of a device or system whose failure to perform can be reasonably expected to cause the failure of the device or system, or to affect its safety or effectiveness. Cypress is not liable, in whole or in part, and you shall and hereby do release Cypress from any claim, damage, or other liability arising from or related to all Unintended Uses of Cypress products. You shall indemnify and hold Cypress harmless from and against all claims, costs, damages, and other liabilities, including claims for personal injury or death, arising from or related to any Unintended Uses of Cypress products.

Cypress, the Cypress logo, Spansion, the Spansion logo, and combinations thereof, WICED, PSoC, CapSense, EZ-USB, F-RAM, and Traveo are trademarks or registered trademarks of Cypress in the United States and other countries. For a more complete list of Cypress trademarks, visit cypress.com. Other names and brands may be claimed as property of their respective owners.