

THIS SPEC IS OBSOLETE

Spec No: 002-05401

Spec Title: AN205401 - FIELD WEAKENED IMPLEMENTATION PMSM DRIVE FM3 MICROCONTROLLER

Replaced by: NONE

AN205401

Field Weakened Implementation PMSM Drive FM3 Microcontroller

Target Products: MB9A5XXX/MB9B5XXX Series

This document describes the application of field weakening control in sensor less PMSM drive, which is based on Cypress's 32-bit microcontroller MB9A5xxx / MB9B5xxx series.

Contents

1 Introduction....1
1.1 Purpose....1
1.2 Definitions, Acronyms and Abbreviations....2
1.3 Document Overview....2
1.4 Reference Documents....3
2 Field weakening Scheme....3
3 Application Programming Interface....5
4 Field Weakening Usage Example....6
4.1 Field weakening application in compressor without load....6
4.2 Field weakening application in air conditioner system (cooling mode)....8
5 Document History....11

1 Introduction

1.1 Purpose

This document describes the application of field weakening control in sensor less PMSM drive, which is based on *Cypress*'s 32-bit microcontroller MB9A5xxx / MB9B5xxx series.

It is well known that when PMSM runs at a certain high speed under FOC, the back-EMF resulted from permanent magnet will occupy a considerable proportion to voltage drop and hence the feed current is not increasable to accelerate rotor speed. A solution to this issue is to apply field weakening control, which imposes a negative d-axis current to weaken air-gap flux density to decrease the back-EMF.

Figure 1 shows the block diagram of sensor less PMSM drive with field weakening scheme. Based on sensor less PMSM drive, a module named "field weakening control" is added after speed PI regulator to generate reference d-axis current and reshaping reference q-axis current to prevent over current.

OBSOLETE

Figure 1. Sensor less PMSM drive with field weakening scheme

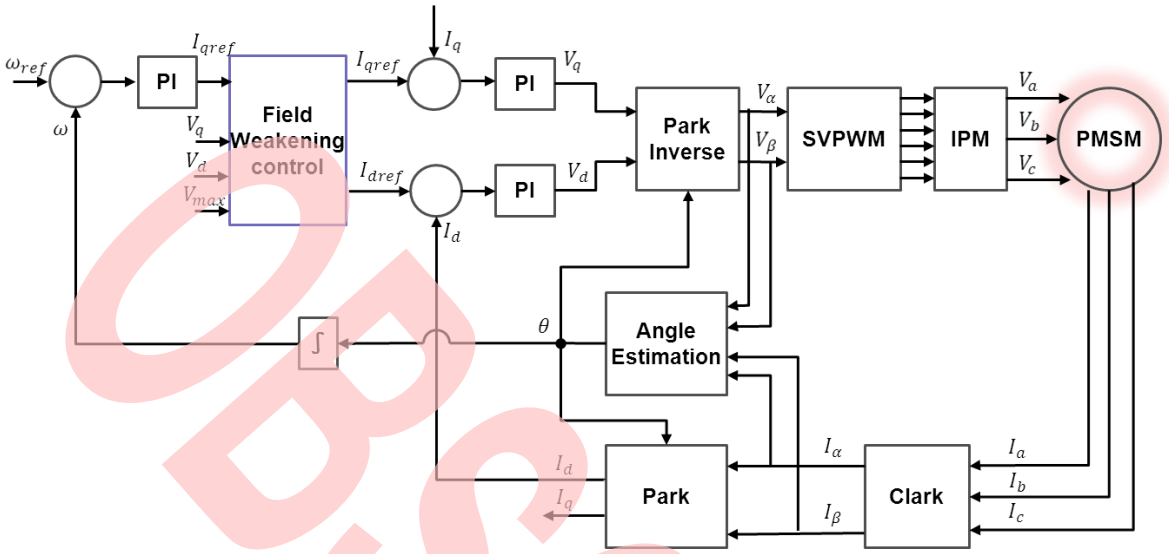

1.2 Definitions, Acronyms and Abbreviations

PMSM: Permanent Magnet Synchronous Motor

V_{DC}: DC bus voltage

V_d: D-axis voltage

V_q: Q-axis voltage

L_d: D-axis inductance

L_q: Q-axis inductance

K_Ψ: Back-EMF constant

$K_{\Psi nom}$: Nominal back-EMF constant

E_d: Back-EMF on d-axis

E_q: Back-EMF on q-axis

ω_r: Rotor rotation speed (electrical speed)

i_{dref}: D-axis reference current

i_{qref}: Q-axis reference current

i_{qMAX}: Maximum q-axis current (for speed loop)

i_{sMAX}: Maximum limit of current scalar

FOC: Field Oriented Control

1.3 Document Overview

The rest of document is organized as the following:

Chapter 2 explains the Scheme of field weakening.

Chapter 3 explains application programming interface.

OBSOLETE

Chapter 4 explains example of field weakening usage.

Chapter 5 explains appendix.

1.4 Reference Documents

J. M. Kim, and S. K. Sul, “Speed control of Interior Permanent Magnet Synchronous Motor Drive for the Flux Weakening Operation”, IEEE Transactions on Industry Applications, Vol. 33, No. 1, pp. 43- 48, 1997.

2 Field weakening Scheme

Introduction to field weakening algorithm

Figure 2 shows the block diagram of field weakening algorithm. The inputs of system are DC voltage (V_{DC}), reference voltage in d-q axis (V_d and V_q), and outputs reference d-axis current i_{dref} and the limitation of q-axis current (i_{qMAX}). A PI regulator is applied to regulate a negative reference i_{dref} by voltage error.

Figure 2. Block Diagram of Field Weakening Algorithm

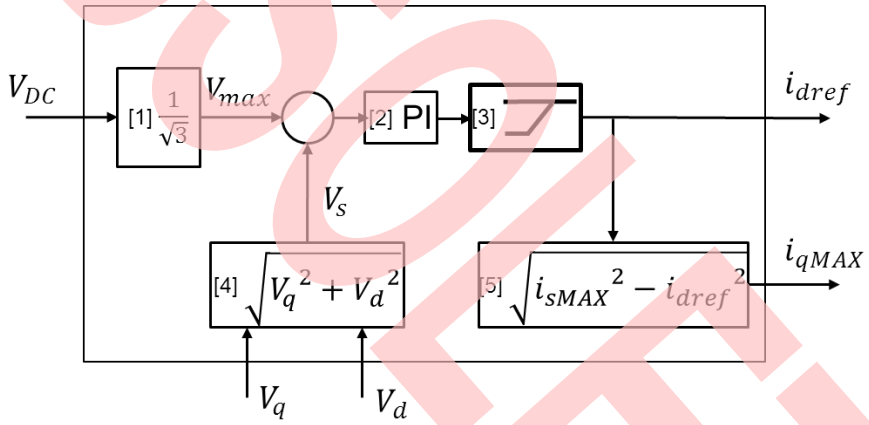

Blocks mentioned above are:

1. According to the property of SVPWM, calculates the maximum voltage scalar that system is able to generate;
2. PI regulator;
3. PI output limiter that filters positive output and only allows negative reference d-axis current;
4. Calculates the magnitude of reference voltage feed to SVPWM;
5. By the predefinition of maximum current, calculates the maximum output of i_{qref} through i_{dref}.

Field weakening description

Field weakening theory

As mentioned in the introduction, when the rotation speed of rotor reaches to a certain high speed (this speed is function of load torque and DC voltage range, etc.), the back-EMF becomes the dominating term of voltage drop in the circuit. The key issues to realize field weakening are, when to apply field weakening, and how to generate a negative flux weakening current i_{dref}.

As the maximum speed is limited by the increasing back-EMF, it is rational to make a criterion to operate PMSM with/without field weakening by the knowledge of back-EMF. The back-EMF of FOC controlled PMSM ($i_d = 0$) in steady state are

$$E_d = -\omega_r L_q i_q \quad (1)$$

$$E_q = \omega_r K_\Psi \quad (2)$$

OBSOLETE

Then the magnitude of the back-EMF is

$$E_s = \sqrt{E_q^2 + E_d^2} = \sqrt{(\omega_r K_\Psi)^2 + (\omega_r L_q i_q)^2} = \omega_r \sqrt{K_\Psi^2 + (L_q i_q)^2} \triangleq K_{\Psi nom}\omega_r \qquad (3)$$

The criterion for when to switch PMSM under field weakening or not can be roughly made by (3) that:

1. if $K_{\Psi nom}\omega_r < \frac{1}{\sqrt{3}} V_{DC} \times K_{scale}$, running motor with $i_{dref} = 0$
2. if $K_{\Psi nom}\omega_r \geq \frac{1}{\sqrt{3}} V_{DC} \times K_{scale}$, apply field weakening algorithm

Where $K_{scale} \in (0,1]$ is a constant, and the speed $\omega_r = \frac{1}{\sqrt{3}} V_{DC} \times K_{scale} / K_{\Psi nom}$ is called base speed. However, when operate motor at the neighborhood of base speed; above switch condition may cause system unstable. By introducing hysteresis region as Figure 3 shows, the vibration can be eliminated.

Figure 3. Hysteresis Scheme in Field Weakening Control

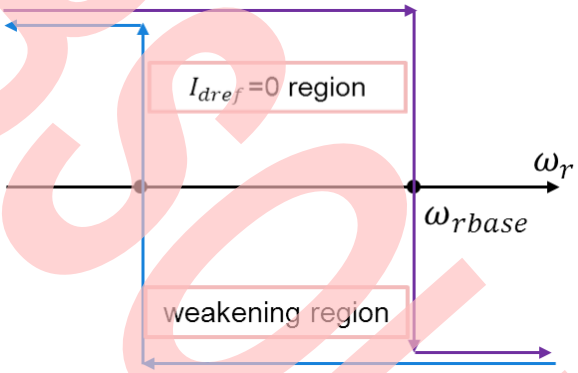

The switch condition is:

As purple line shows in figure 3-3, when motor runs with $i_d = 0$, and rotor speed is accelerating up to ω_{rbase}. System will switch motor into field weakening region with a negative i_d. The variation of rotor speed in the neighbourhood of base speed will not frequently switch system between normal operation region and field weakening region due to a proper speed lag.

As blue line shows in figure 3-3, motor runs in field weakening region with negative i_d, and rotor speed is decreasing from $\omega_r > \omega_{rbase}$. Motor will not switch to $i_d = 0$ as soon as $\omega_r = \omega_{rbase}$ but until $\omega_{rbase} - \omega_r = speed\ lag$, where $speed\ lag$ is a settable constant.

For generating negative flux weakening current i_{dref}, a PI regulator is applied as figure 3-1 shows. This regulator takes the difference between V_{max} and V_s as input, which is the over flow scale of command voltage scalar. Right after PI regulator, a limiter is used to allow only negative i_{dref} for field weakening.

Flow chart of sensor less PMSM drive with field weakening

Figure 4 shows the flow chart of sensor less PMSM drive with field weakening control. After estimation of rotor speed and position, field weakening control is first processed to calculate i_{dref} and the limitation of i_q.

The criterion mentioned in 3.2.1 is applied to judge whether utilizing field weakening or not. Based from equation (3), $K_{\Psi nom}$ is calculated and then back-EMF is acquired. Then following the criterion, motor will be switched between field weakening operation region and normal operation region automatically, andi_{dref} and limitation of $i_q$are available for next control loop.

Based on the output of field weakening module, and i_{dref} and limitation of i_q are available for any classic motor control scheme. In this document, double-close-loop control system is applied for speed and current regulation.

OBSOLETE

Figure 4. Flow Chart of Sensorless PMSM Drive with Field Weakening Control

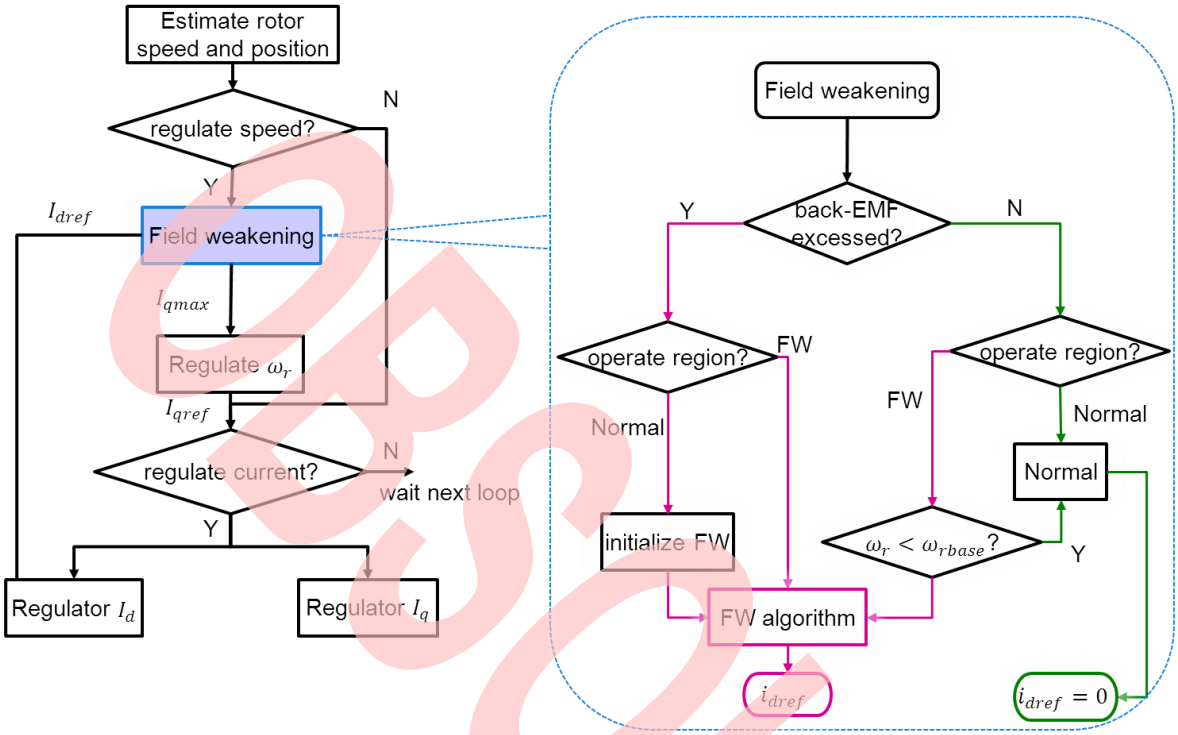

OBSOLETE

3 Application Programming Interface

Field weakening

[Format]

```
voidFieldWeakening(unsigned char WhichMFT)
```

[Parameters]

`WhichMFT`: the motor driven by MFT0 (or MF1) are going to run field weakening algorithm

[Return value]

None

[Descriptions]

This function realizes field weakening algorithm by passing parameter `WhichMFT`. It has none return value but modifies the global variables as below

```
gstMotorRunCtrl_SL[WhichMFT].Derives.Idq.d_Q15

gstMotorRunCtrl_SL[WhichMFT].PI.PI_WeakenI_A_W2Iqref.OutputMax_Q15
gstMotorRunCtrl_SL[WhichMFT].PI.PI_WeakenI_A_W2Iqref.OutputMin_Q15
gstMotorRunCtrl_SL[WhichMFT].PI.PI_WeakenI_A_W2Iqref.uMax_Q15
gstMotorRunCtrl_SL[WhichMFT].PI.PI_WeakenI_A_W2Iqref.uMin_Q15
```

[Example]

```
/* an example of using field weakening algorithm */
#defineMFT0 0
……
Function()
{
……
FieldWeakening(MFT0)       // applying field weakening to motor driven by MFT0
……
}
```

4 Field Weakening Usage Example

4.1 Field weakening application in compressor without load

This example applies field weakening algorithm in compressor without load, with compressor model DA150S1C-20FZ. The DC voltage is set to 100V, with maximum output current 5A.

First, find macro that enables field weakening control in MCL/Head/4_Application/_Define.h, and modify EN_CTRL_FIELD_WEAKEN as TRUE as below.

```
……
#define EN_CTRL_FIELD_WEAKEN TRUE
……
```

Then set control parameters as below

```
/* an example of using field weakening algorithm, parameter are all in     */
/* Q15 format                                                              */
stFieldWeakenPI[WhichMFT].Ki_Q15 = 21000;      //0.0061, for I regulator
stFieldWeakenPI[WhichMFT].Kp_Q15 = 75000;// 0.5493, for P regulator
stFieldWeakenPI[WhichMFT].OutputMax_Q15 = 0;// Upper limit of PI regulator
stFieldWeakenPI[WhichMFT].OutputMin_Q15 = -98304;//Lower limit of PI regulator
stFieldWeakenPI[WhichMFT].uMax_Q15 = 0; // Upper limit of I regulator
stFieldWeakenPI[WhichMFT].uMin_Q15 = -98304;// Upper limit of I regulator
IsMax_Q15[WhichMFT]= 10 * Q15_BASE;      // maximum allowed current (DC line)
SpeedLag_Q15[WhichMFT] = 60 * Q15_BASE; // speed lag for hysteresis control
```

The following figure shows testing result of this example.

OBSOLETE

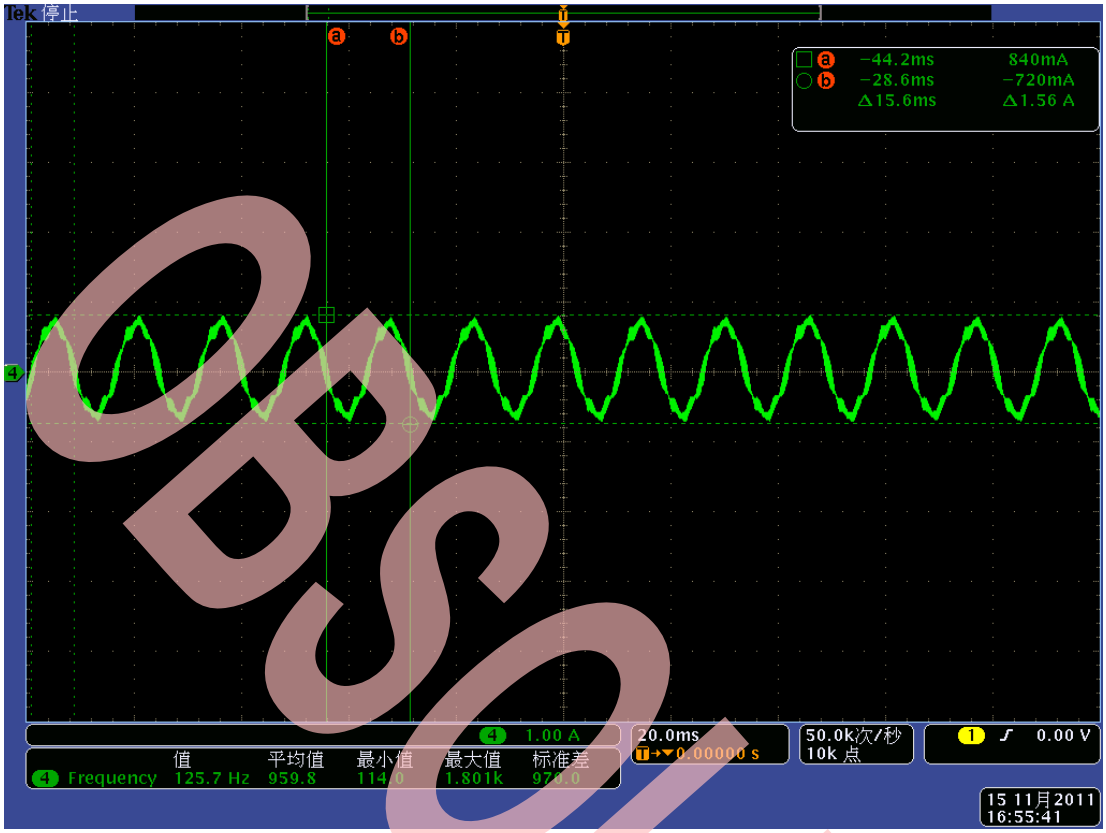

(a) without field weakening control ($\omega_{rMAX} = 64Hz$),

OBSOLETE

Figure 5. U-phase Current Waveform at Maximum Speed (DA150S1C-20FZ without load)

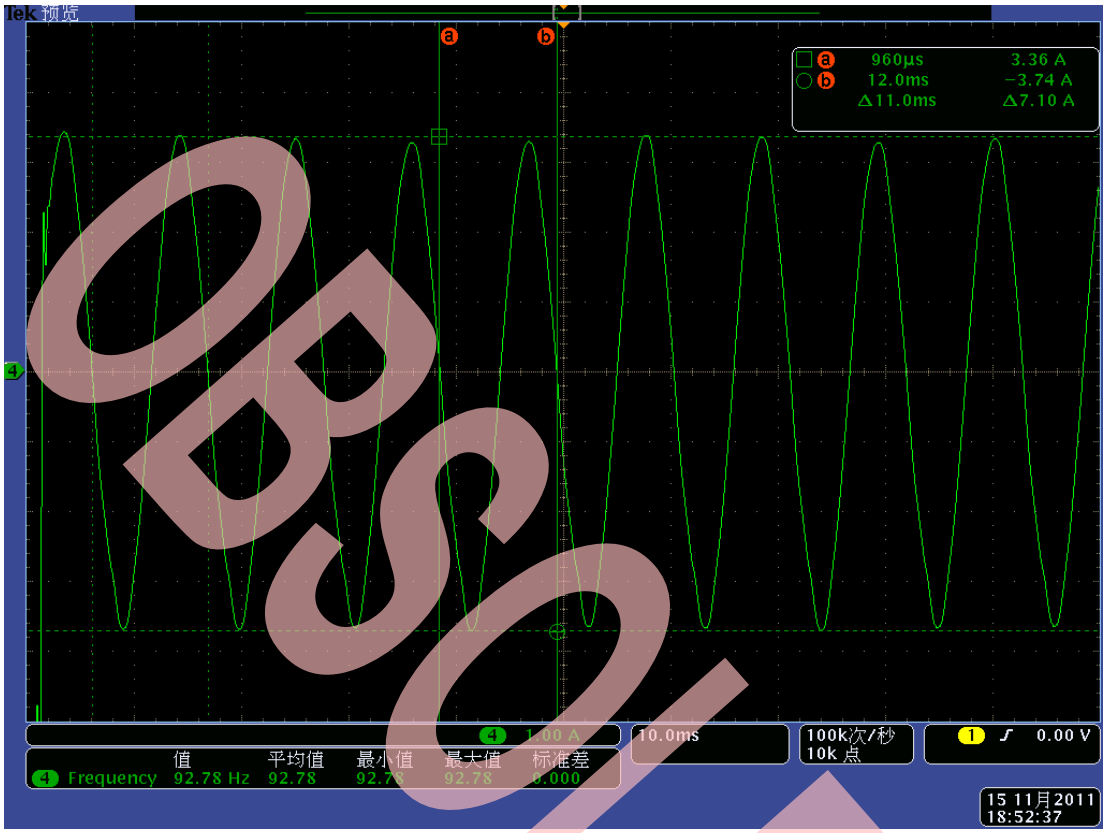

(b) with field weakening control($\omega_{rMAX} = 91Hz$)

4.2 Field weakening application in air conditioner system (cooling mode)

This example applies field weakening algorithm in AUX air conditioner with compressor model DA89X1C-20FZ. The DC voltage is set 70V, with maximum output current 5A. The maximum field weakening speed is not reached due to power limitation of DC supply.

First, find macro that enables field weakening control in MCL/Head/4_Application/_Define.h, and modify EN_CTRL_FIELD_WEAKEN as TRUE as below.

```
……
#define EN_CTRL_FIELD_WEAKEN TRUE
……
```

Then set control parameters as below

```
/* an example of using field weakening algorithm, parameter are all in     */
/* Q15 format                                                               */
stFieldWeakenPI[WhichMFT].Ki_Q15 = 200; //0.0061, for I regulator
stFieldWeakenPI[WhichMFT].Kp_Q15 = 18000;// 0.5493, for P regulator
stFieldWeakenPI[WhichMFT].OutputMax_Q15 = 0;// Upper limit of PI regulator
stFieldWeakenPI[WhichMFT].OutputMin_Q15 = -158304;//Lower limit of PI regulator
stFieldWeakenPI[WhichMFT].uMax_Q15 = 0; // Upper limit of I regulator
stFieldWeakenPI[WhichMFT].uMin_Q15 = -158304;// Upper limit of I regulator
IsMax_Q15[WhichMFT]= 20 * Q15_BASE;     // maximum allowed current (DC line)
SpeedLag_Q15[WhichMFT] = 20 * Q15_BASE; // speed lag for hysteresis control
```

Following figure shows testing result of this example.

OBSOLETE

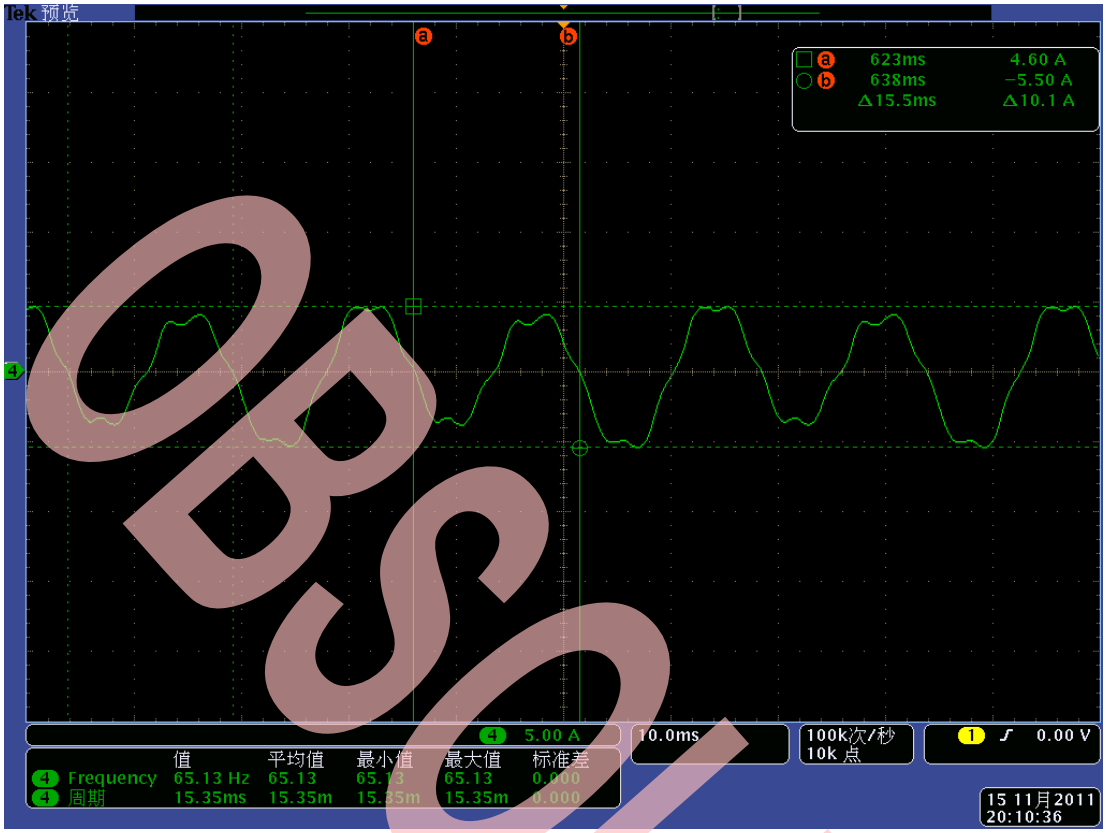

(a) without field weakening control ($\omega_{rMAX} = 64.5$Hz)

OBSOLETE

Figure 6. phase Current Waveform at Maximum Speed (DA89X1C-20FZ in cooling mode)

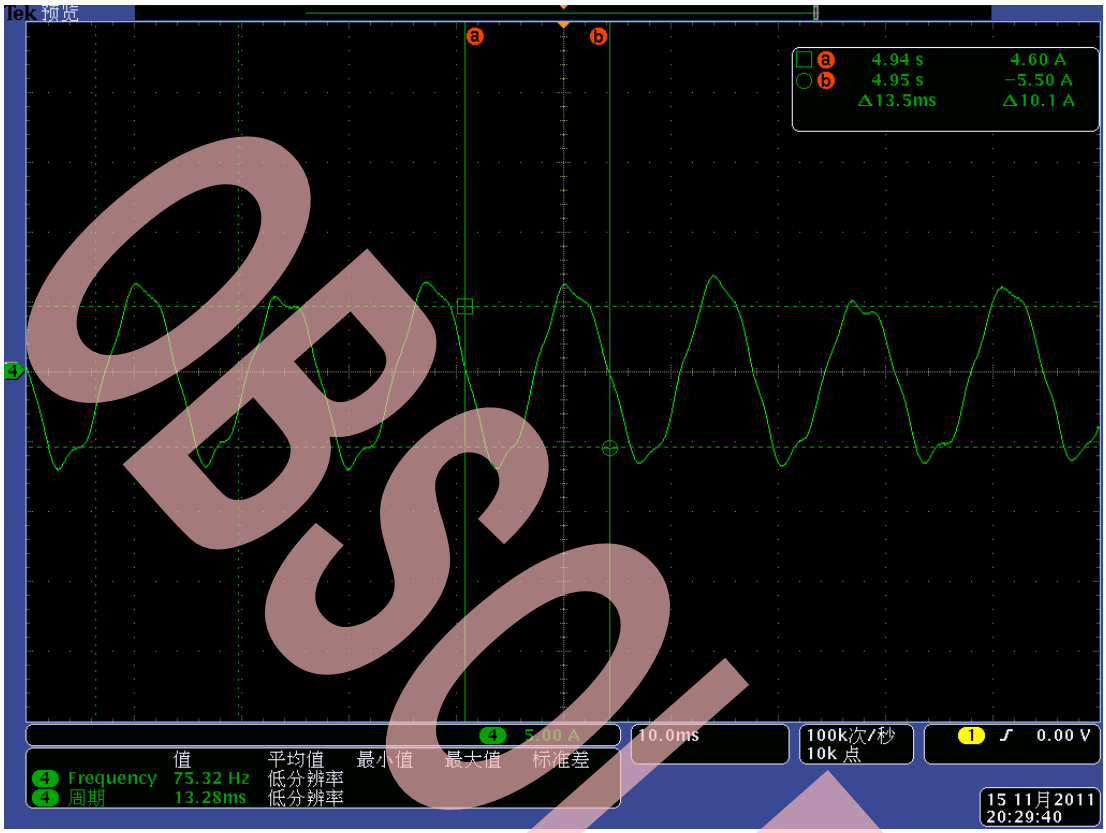

(b) with field weakening control($\omega_r = 75Hz$)

OBSOLETE

5 Document History

Document Title: AN205401 - Field Weakened Implementation PMSM Drive FM3 Microcontroller

Document Number: 002-05401

Revision	ECN	Orig. of Change	Submission Date	Description of Change
**	—	XINL	11/15/2011	Initial release
*A	5043176	XINL	01/19/2015	Converted Spansion Application Note “MCU-AN-510117-E-10” to Cypress format
*B	6329249	SSAS	10/02/2018	Obsoleted

OBSOLETE

Worldwide Sales and Design Support

Cypress maintains a worldwide network of offices, solution centers, manufacturer's representatives, and distributors. To find the office closest to you, visit us at Cypress Locations.

Products

Automotive	cypress.com/go/automotive
Clocks & Buffers	cypress.com/go/clocks
Interface	cypress.com/go/interface
Lighting & Power Control	cypress.com/go/powerpsoc
Memory	cypress.com/go/memory
PSoC	cypress.com/go/psoc
Touch Sensing	cypress.com/go/touch
USB Controllers	cypress.com/go/usb
Wireless/RF	cypress.com/go/wireless
Spansion Products	cypress.com/spansion products

PSoC® Solutions

psoc.cypress.com/solutions

PSoC 1 | PSoC 3 | PSoC 4 | PSoC 5LP

Cypress Developer Community

Community | Forums | Blogs | Video | Training

Technical Support

cypress.com/go/support

OBSOLETE

All other trademarks or registered trademarks referenced herein are the property of their respective owners.

Cypress Semiconductor
198 Champion Court
San Jose, CA 95134-1709

Phone : 408-943-2600
Fax : 408-943-4730
Website : www.cypress.com

© Cypress Semiconductor Corporation, 2011-2018. The information contained herein is subject to change without notice. Cypress Semiconductor Corporation assumes no responsibility for the use of any circuitry other than circuitry embodied in a Cypress product. Nor does it convey or imply any license under patent or other rights. Cypress products are not warranted nor intended to be used for medical, life support, life saving, critical control or safety applications, unless pursuant to an express written agreement with Cypress. Furthermore, Cypress does not authorize its products for use as critical components in life-support systems where a malfunction or failure may reasonably be expected to result in significant injury to the user. The inclusion of Cypress products in life-support systems application implies that the manufacturer assumes all risk of such use and in doing so indemnifies Cypress against all charges.

This Source Code (software and/or firmware) is owned by Cypress Semiconductor Corporation (Cypress) and is protected by and subject to worldwide patent protection (United States and foreign), United States copyright laws and international treaty provisions. Cypress hereby grants to licensee a personal, non-exclusive, non-transferable license to copy, use, modify, create derivative works of, and compile the Cypress Source Code and derivative works for the sole purpose of creating custom software and or firmware in support of licensee product to be used only in conjunction with a Cypress integrated circuit as specified in the applicable agreement. Any reproduction, modification, translation, compilation, or representation of this Source Code except as specified above is prohibited without the express written permission of Cypress.

Disclaimer: CYPRESS MAKES NO WARRANTY OF ANY KIND, EXPRESS OR IMPLIED, WITH REGARD TO THIS MATERIAL, INCLUDING, BUT NOT LIMITED TO, THE IMPLIED WARRANTIES OF MERCHANTABILITY AND FITNESS FOR A PARTICULAR PURPOSE. Cypress reserves the right to make changes without further notice to the materials described herein. Cypress does not assume any liability arising out of the application or use of any product or circuit described herein. Cypress does not authorize its products for use as critical components in life-support systems where a malfunction or failure may reasonably be expected to result in significant injury to the user. The inclusion of Cypress' product in a life-support systems application implies that the manufacturer assumes all risk of such use and in doing so indemnifies Cypress against all charges.

Use may be limited by and subject to the applicable Cypress software license agreement.