The following document contains information on Cypress products. The document has the series name, product name, and ordering part numbering with the prefix “MB”. However, Cypress will offer these products to new and existing customers with the series name, product name, and ordering part number with the prefix “CY”.

How to Check the Ordering Part Number

1. Go to www.cypress.com/pcn.
2. Enter the keyword (for example, ordering part number) in the **SEARCH PCNS** field and click **Apply**.
3. Click the corresponding title from the search results.
4. Download the Affected Parts List file, which has details of all changes

For More Information

Please contact your local sales office for additional information about Cypress products and solutions.

About Cypress

Cypress is the leader in advanced embedded system solutions for the world's most innovative automotive, industrial, smart home appliances, consumer electronics and medical products. Cypress' microcontrollers, analog ICs, wireless and USB-based connectivity solutions and reliable, high-performance memories help engineers design differentiated products and get them to market first. Cypress is committed to providing customers with the best support and development resources on the planet enabling them to disrupt markets by creating new product categories in record time. To learn more, go to www.cypress.com.

AN205386

F²MC - 8FX Family, MB95200 Series, Debug Interface Introduction

This document indicates the MB95F200 series in-circuit debug interface. There are mainly two parts in this document. The first part introduces the pin assignment and detail usage of in-circuit debug interface, and the second part lists the compatible MCU part number for reference.

Contents

1 Introduction....1
2 Debug IF Function in the Debug System....2
2.1 System Configuration....2
3 BGMA Debug Interface Table....3
3.1 Pins of the Interface Connector....3
3.2 TOP view of the Interface Connector....3
4 Pin Function....4
4.1 Pins Used in Serial PGM Mode....4
4.2 PGM Mode Entry Timing Chart....5
5 Usable Products....6
6 Additional Information....7
Document History....8

1 Introduction

This document indicates the MB95F200 series in-circuit debug interface.

There are mainly two parts in this document. The first part introduces the pin assignment and detail usage of in-circuit debug interface, and the second part lists the compatible MCU part number for reference.

2 Debug IF Function in the Debug System

This chapter introduces the debug IF function in the debug system.

2.1 System Configuration

Figure 1. System Configuration

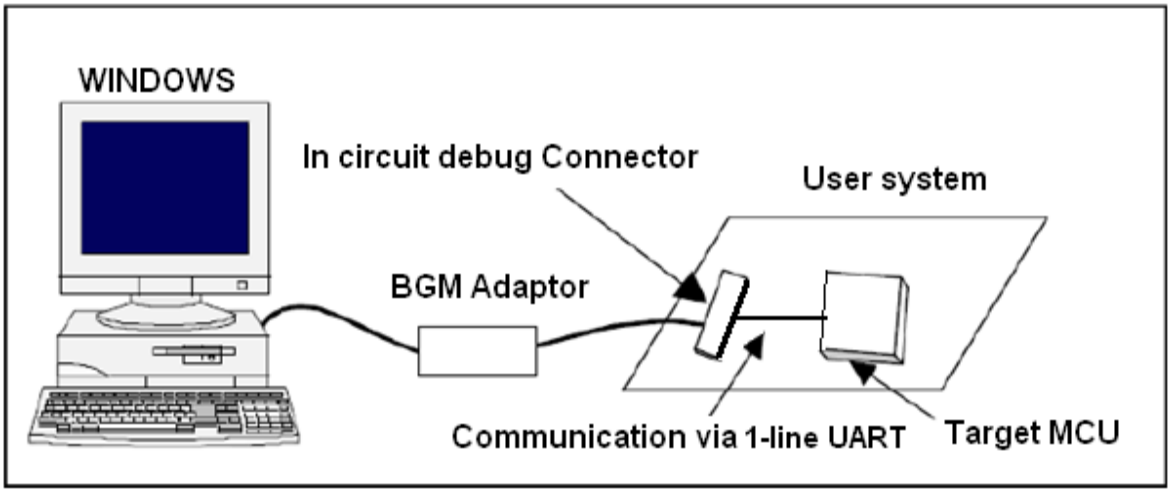

This is a typical system configuration block.

The BGM Adaptor MB2146-08-E can be connected to a personal computer with a USB cable on one side, and can be connected to the microcontroller mounted in the user system with the in-circuit debug interface on the other side.

The in-circuit debug interface has a 1-line UART as communicate channel, supporting both programming function and debug function.

3 BGMA Debug Interface Table

This chapter introduces the BGMA debug IF.

3.1 Pins of the Interface Connector

Table 1 shows pins of the adapter interface connector to be put on the user system.

Table 1. Pins of the Interface Connector

Connector Pin No.	MCU Pin Name	Input/ Output	Remarks
1	UVCC_EV	BGMA← MCU	Target board power supply check pin
2	GND	-	MCU GND
3	RSTIN	BGMA→ MCU	Provides 10 V directly to RSTX pin.
4	RSTOUT	BGMA← MCU	Provides reset circuit signal to output.
5	N.C	-	-
6	N.C	-	-
7	N.C	-	-
8	DBG	BGMA↔ MCU	Communication pin for programming and debug
9	N.C	-	-
10	N.C	-	-

3.2 TOP view of the Interface Connector

The figure below is the top view of the interface connector.

Figure 2. TOP View of the Interface Connector

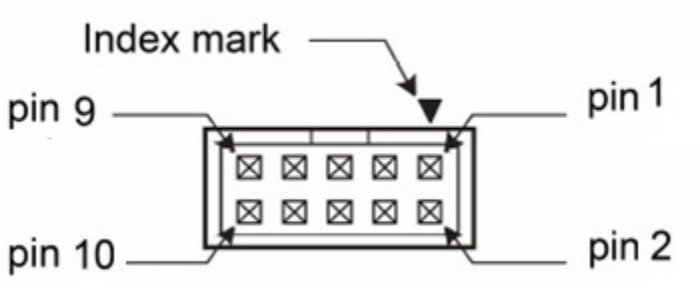

4 Pin Function

This chapter describes pin functions in details.

4.1 Pins Used in Serial PGM Mode

Figure 3. System Circuit

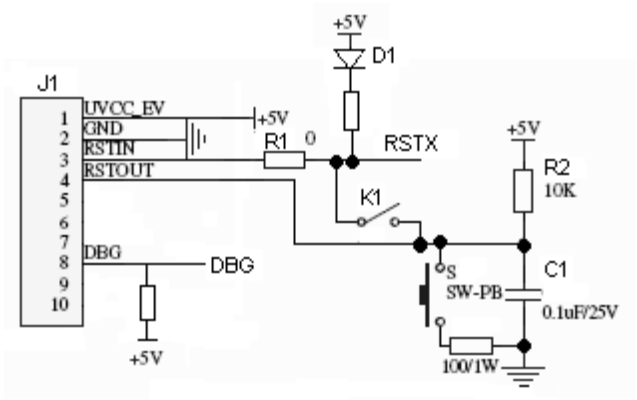

Components Recommendation:

D1: VF < 0.3V when IF = 1mA. E.g. LL103A, 1SS294

The following list shows functions of the interface connector.

1. J1, a 10-pin connector, is the interface of this circuit.
2. The write voltage (VCC = 4.5 V to 5.5 V) is supplied from the user system. UVCC_EV and DBG pin timing controls the PGM mode entry, refer to the timing diagram in next section.
3. Pin 2 of the connector used to connect the GND.
4. Programmer provides 10 V directly to RSTX pin during flash erase/write operation. If it is pulled high in user system, please consider to add a low-drop diode for each H voltage separately.
5. Pin 4 of the connector is used to connect a reset circuit. Design a switch K1 between the reset circuit and the reset pin (RSTX) in the process of programming. Be sure to cut off K1 to stop the high voltage from going into the reset circuit. Upon end of the programming, switch K1 is connected to supply a reset circuit to the target MCU.
6. 1-line UART communication is realized through DBG pin in the programmer. Special timing of DBG pin and VCC pin can set serial write mode. (Refer to the timing chart in the next section.)

4.2 PGM Mode Entry Timing Chart

The following timing will enable 8FX-LPC MCU to enter PGM mode.

Figure 4. PGM Mode Entry Timing Chart

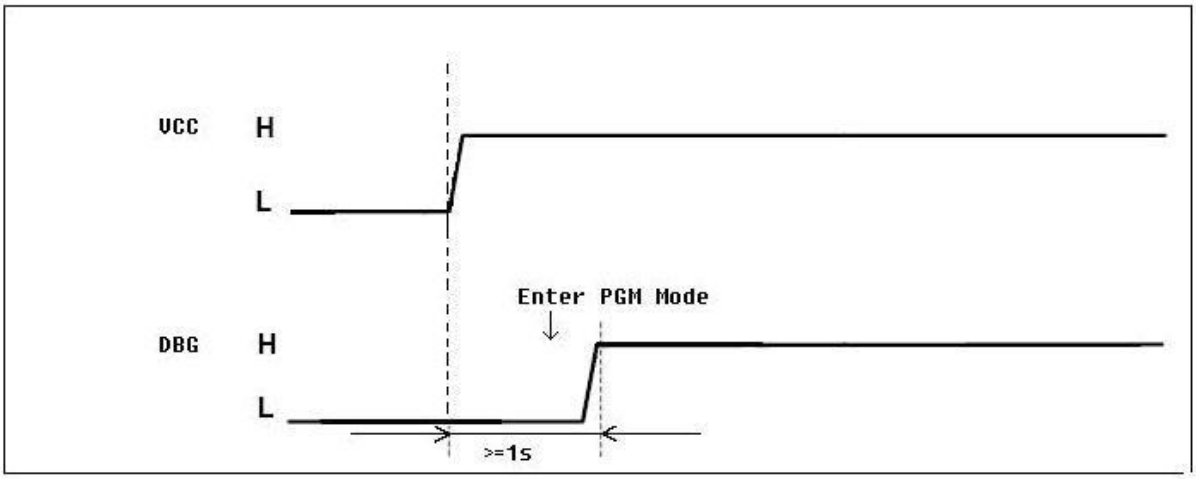

5 Usable Products

BGMA (Part Number: MB2146-08-E) can debug MCUs below through the interface.

Table 2. MCU Products

Series	Pin Number	Series	Pin Number
MB95F200H	MB95F202K	MB95F260H	MB95F262K
	MB95F202H		MB95F262H
	MB95F203K		MB95F263K
	MB95F203H		MB95F263H
	MB95F204K		MB95F264K
	MB95F204H		MB95F264H
MB95F210H	MB95F212K	MB95F270H	MB95F272K
	MB95F212H		MB95F272H
	MB95F213K		MB95F273K
	MB95F213H		MB95F273H
	MB95F214K		MB95F274K
	MB95F214H		MB95F274H
MB95F220H	MB95F222K	MB95F280H	MB95F282K
	MB95F222H		MB95F282H
	MB95F223K		MB95F283K
	MB95F223H		MB95F283H
			MB95F284K
			MB95F284H
MB95F330H	MB95F332K		
	MB95F332H		
	MB95F333K		
	MB95F333H		
	MB95F334K		
	MB95F334H		

6 Additional Information

For more information on Cypress Microcontrollers Products, please visit the following websites:

http://www.cypress.com/cypress-microcontrollers

http://www.cypress.com/cypress-mcu-product-softwareexamples

Document History

Document Title: AN205386 – F²MC - 8FX Family, MB95200 Series, Debug Interface Introduction

Document Number: 002-05386

Revision	ECN	Orig. of Change	Submission Date	Description of Change
**	-	Benjamin. Yang	02/05/2009	V1.0, First Draft
			02/06/2009	Modify PGM Mode entry timing chart
			02/09/2009	Modify
*A	5265498	HUAL	05/09/2016	Migrated Spansion Application Note “MCU-AN-500016-E-12” to Cypress format.

Worldwide Sales and Design Support

Cypress maintains a worldwide network of offices, solution centers, manufacturer's representatives, and distributors. To find the office closest to you, visit us at Cypress Locations.

Products

ARM® Cortex® Microcontrollers	cypress.com/arm
Automotive	cypress.com/automotive
Clocks & Buffers	cypress.com/clocks
Interface	cypress.com/interface
Lighting & Power Control	cypress.com/powerpsoc
Memory	cypress.com/memory
PSoC	cypress.com/psoc
Touch Sensing	cypress.com/touch
USB Controllers	cypress.com/usb
Wireless/RF	cypress.com/wireless

PSoC® Solutions

PSoC 1 | PSoC 3 | PSoC 4 | PSoC 5LP

Cypress Developer Community

Forums | Projects | Videos | Blogs | Training | Components

Technical Support

cypress.com/support

PSoC is a registered trademark and PSoC Creator is a trademark of Cypress Semiconductor Corporation. All other trademarks or registered trademarks referenced herein are the property of their respective owners.

Cypress Semiconductor
198 Champion Court
San Jose, CA 95134-1709

Phone : 408-943-2600
Fax : 408-943-4730
Website : www.cypress.com

© Cypress Semiconductor Corporation,2009-2016. This document is the property of Cypress Semiconductor Corporation and its subsidiaries, including Spansion LLC ("Cypress"). This document, including any software or firmware included or referenced in this document ("Software"), is owned by Cypress under the intellectual property laws and treaties of the United States and other countries worldwide. Cypress reserves all rights under such laws and treaties and does not, except as specifically stated in this paragraph, grant any license under its patents, copyrights, trademarks, or other intellectual property rights. If the Software is not accompanied by a license agreement and you do not otherwise have a written agreement with Cypress governing the use of the Software, then Cypress hereby grants you a personal, non-exclusive, nontransferable license (without the right to sublicense) (1) under its copyright rights in the Software (a) for Software provided in source code form, to modify and reproduce the Software solely for use with Cypress hardware products, only internally within your organization, and (b) to distribute the Software in binary code form externally to end users (either directly or indirectly through resellers and distributors), solely for use on Cypress hardware product units, and (2) under those claims of Cypress's patents that are infringed by the Software (as provided by Cypress, unmodified) to make, use, distribute, and import the Software solely for use with Cypress hardware products. Any other use, reproduction, modification, translation, or compilation of the Software is prohibited.

TO THE EXTENT PERMITTED BY APPLICABLE LAW, CYPRESS MAKES NO WARRANTY OF ANY KIND, EXPRESS OR IMPLIED, WITH REGARD TO THIS DOCUMENT OR ANY SOFTWARE OR ACCOMPANYING HARDWARE, INCLUDING, BUT NOT LIMITED TO, THE IMPLIED WARRANTIES OF MERCHANTABILITY AND FITNESS FOR A PARTICULAR PURPOSE. To the extent permitted by applicable law, Cypress reserves the right to make changes to this document without further notice. Cypress does not assume any liability arising out of the application or use of any product or circuit described in this document. Any information provided in this document, including any sample design information or programming code, is provided only for reference purposes. It is the responsibility of the user of this document to properly design, program, and test the functionality and safety of any application made of this information and any resulting product. Cypress products are not designed, intended, or authorized for use as critical components in systems designed or intended for the operation of weapons, weapons systems, nuclear installations, life-support devices or systems, other medical devices or systems (including resuscitation equipment and surgical implants), pollution control or hazardous substances management, or other uses where the failure of the device or system could cause personal injury, death, or property damage ("Unintended Uses"). A critical component is any component of a device or system whose failure to perform can be reasonably expected to cause the failure of the device or system, or to affect its safety or effectiveness. Cypress is not liable, in whole or in part, and you shall and hereby do release Cypress from any claim, damage, or other liability arising from or related to all Unintended Uses of Cypress products. You shall indemnify and hold Cypress harmless from and against all claims, costs, damages, and other liabilities, including claims for personal injury or death, arising from or related to any Unintended Uses of Cypress products.

Cypress, the Cypress logo, Spansion, the Spansion logo, and combinations thereof, PSoC, CapSense, EZ-USB, F-RAM, and Traveo are trademarks or registered trademarks of Cypress in the United States and other countries. For a more complete list of Cypress trademarks, visit cypress.com. Other names and brands may be claimed as property of their respective owners.