AN205354

FM3 Microcontroller with OOB Solution on BLDC Washer

This application note introduces the OOB (out-of-balance) solution on direct drive or belt drive washers.

1 Introduction

This document introduces the OOB (out-of-balance) solution on direct drive or belt drive washers.

1.1 Purpose

The out-of-balance detection and load displacement phase is very important before the washer goes into a spin-dry. The clothes in the drum must be properly balanced to reduce the waggling of the washer. So the OOB diction must be accuracy on H-axis washers.

The OOB detection accuracy and consistency of the OOB value for different working condition have been focused and solved in this document.

1.2 Definitions, Acronyms and Abbreviations

PMSM	-	Permanent Magnet Synchronous Motor
BLDC	-	Brush Less DC Motor
V_{DC}	-	DC bus voltage
Vsq	-	Voltage on q axis of d/q coordinate in FOC algorithm
Vsd	-	Voltage on d axis of d/q coordinate in FOC algorithm
Isq	-	Current on q axis of d/q coordinate in FOC algorithm
Isd	-	Current on d axis of d/q coordinate in FOC algorithm
n	-	Rotor rotation speed
i_{dref}	-	0d-axis reference current
i_{qref}	-	q-axis reference current
I_{sMAX}	-	Max limit of current scalar
V_{sMAX}	-	Max limit of voltage scalar
λ_f	-	Flux link-age
ω_r	-	Rotor electrical angular velocity

1.3 Document Overview

The rest of document is organized as the following:

Chapter 2 explains the principles of OOB detection.

Chapter 3 explains the implementation of OOB detection.

2 Principles of OOB

The actual imbalance of the clothes in the washer drum is detected before the sipn cycle. The speed of the drum is increased by a ramp up to the speed such 89rpm at which the clothes become centrifuged to inner side of the drum. The algorithm performs an integration of the motor electrical speed ripple per one mechanical cycle. The integral value estimates the size of the load imbalance.

If the imbalance is lower than the safety limit, it starts ramping the speed and goes into a dry-spin. If the imbalance is higher than the safety limit, the speed of the drum is decreased and the direction of rotation is reversed. The algorithm performs a new load displacement at the reversed speed. At the end of a load displacement interval the rotation is reversed and out-of-balance detection is executed again. The out-of-balance detection and load displacement sequence is performed until an equal distribution of the drum load is achieved. Then a spin-dry is started.

2.1 OOB Principle

The unbalance load in the drum of washer such as Figure 1 will lead the motor torque ripple at low speed. The unbalance of load can be estimated by the motor torque ripple at low speed such as 90rpm.

Figure 1. Washer Drum with OOB in Empty and Balance Load

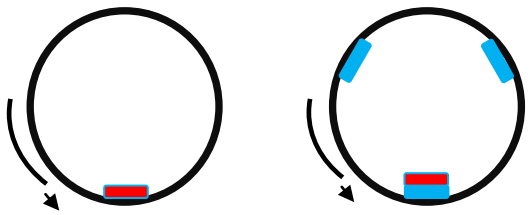

One of the motor torque equation is shown as Equation 1. The motor parameter is not used, so if the motor power is accurate calculated, the torque ‘Te’ can be got.

$$Te = \frac{P}{\Omega}$$

Equation 1

Where: ‘Ω’ is the angle speed of rotor (unit : rad/s), and P is the power of motor .

$$\omega e(rpm) = 60 * \frac{\Omega\left(\frac{rad}{s}\right)}{2\pi} \Rightarrow \Omega = \frac{\omega e * 2\pi}{60}$$

Equation 2

Equation 2 is derivated into Equation 1 a equation can be represented by mechanical speed as Equation 2:

$$Te = 9.55 * \frac{P}{\omega m}$$

Equation 3

where: ‘ωm’ is the mechanical speed of motor (unit: rpm) .

The power of motor is almost the same while the motor is stable running, the torque ripple can be dedicated the motor speed ripple either.

The algorithm performs an integration of the motor electrical speed ripple per one drum cycle. The OOB value can be dedicated as Equation 4

$$oobData = \frac{\sum |w_{max} - w_{min}|}{N}$$

Equation 4

Where: 'w_{max}' is the max mechanical speed and w_{min} is the min mechanical speed in on drum cycle. 'N' is the drum cycles.

3 Implementation of OOB

The implementation of the OOB Detection is introduced in the chapter, and the control block of the hall sensor washer solution is shown as Figure 2

Figure 2. PMSM Control Block with Hall Sensor Estimation

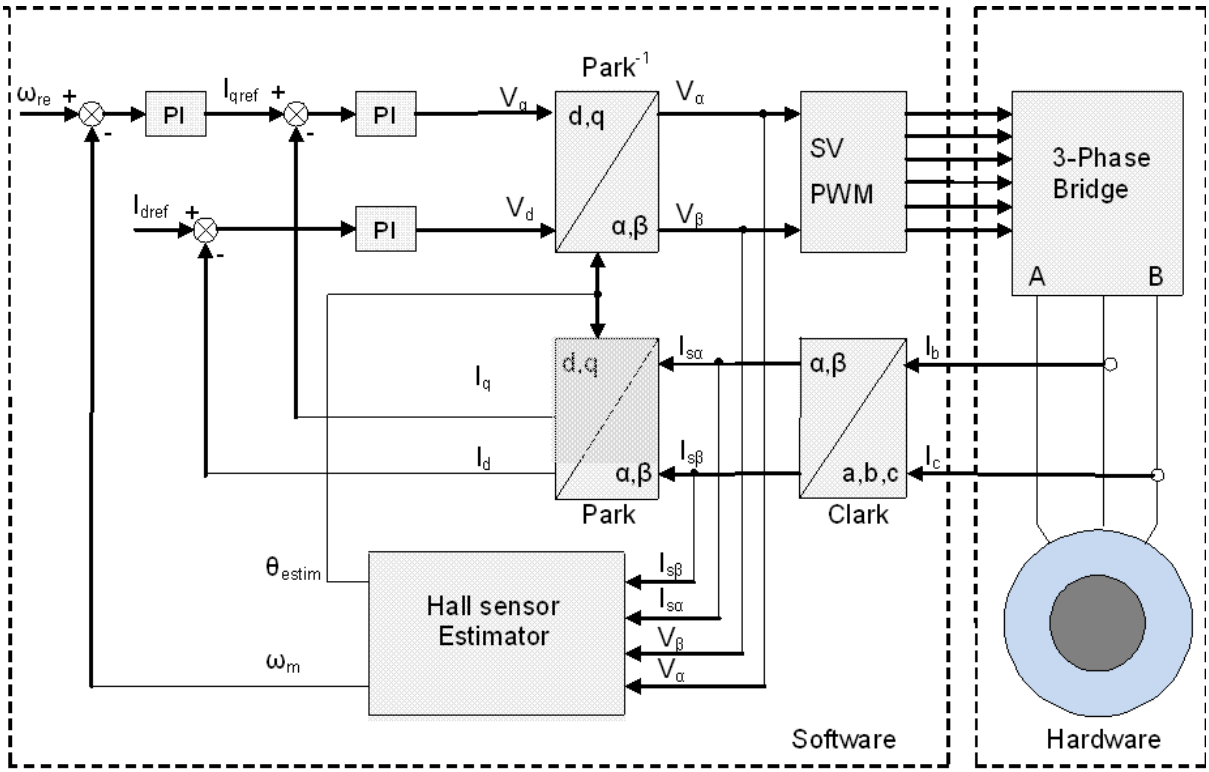

3.1 Feature

- The linearity for different is almost 1/10g.
- The OOB data dispersion is the same for the same OOB, the diction accuracy is 50g.
- The consistency of the data between different washers is almost the same for the same OOB load condition

3.2 Data Structure

The mainly variable for OOB detection is shown as Table 1.

Table 1. Hall Correction theta

Type	Name	Description
INT8U	oobHallCounter;	Hall counter, 114 couter in one drum cycle
INT32U	oobSum32;	The sum of Speed ripple in one drum cycle
INT8U	oobTestCycs;	Drumb cycle couter
INT16U	motorSpeed;	Motor speed in every 1ms
INT16U	test_speed;	Motor setting speed
INT16U	OobData;	Average speed ripple in one drum cycle
INT8U	OOBDectFlag;	OOB diction state machine
INT16U	OobData_last;	The OOB data
FILTER_MA32	OOBdataFilter;	Filter for OOB transient data

3.3 Flowchart of OOB Detection

Figure 3. Flowchart for OOB Diction

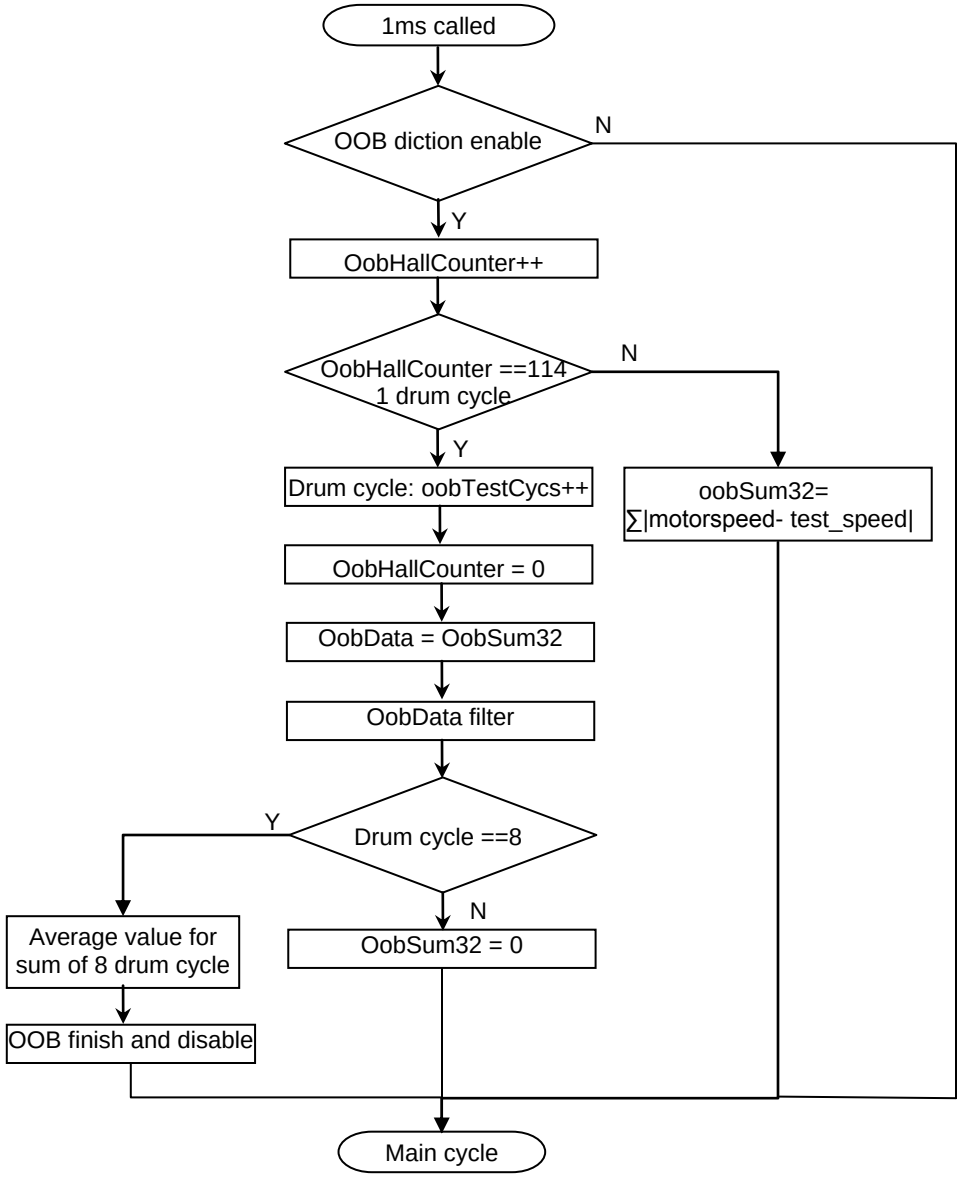

3.4 Test Data

The OOB data on different washers

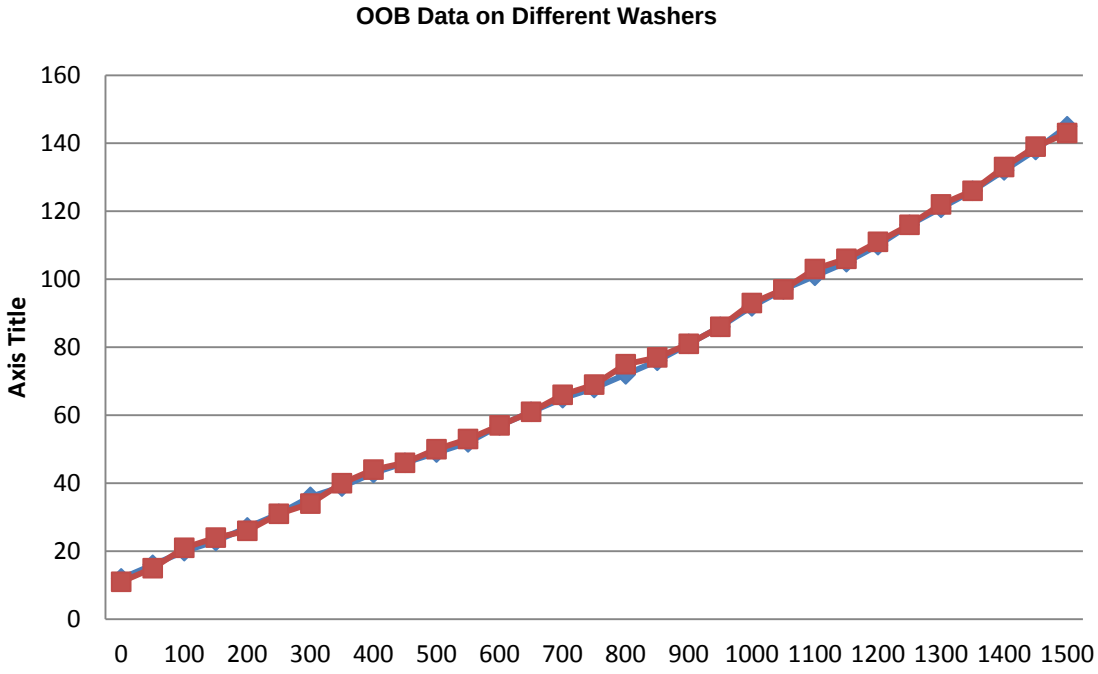

The OOB data for the 800g OOB load

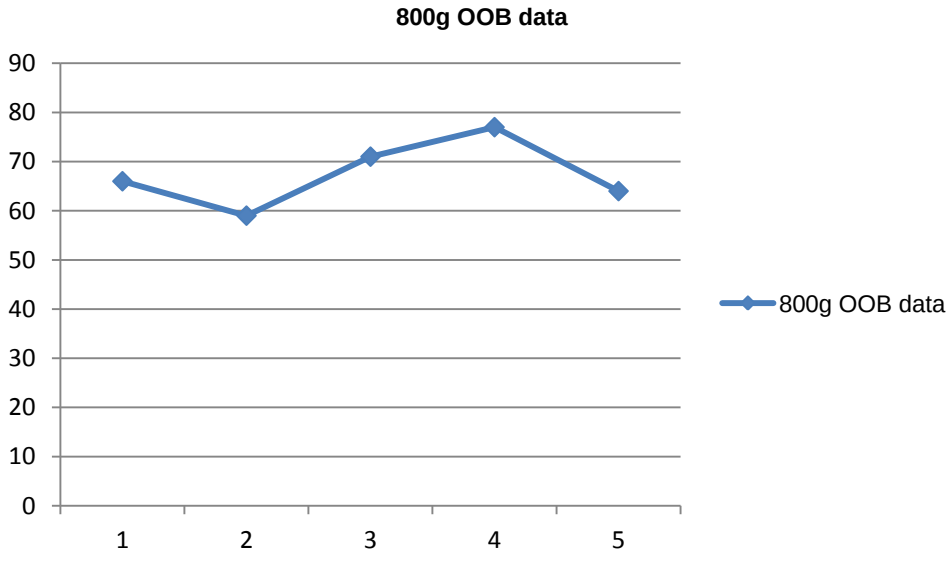

The OOB data for empty load and balance load in the same washer.

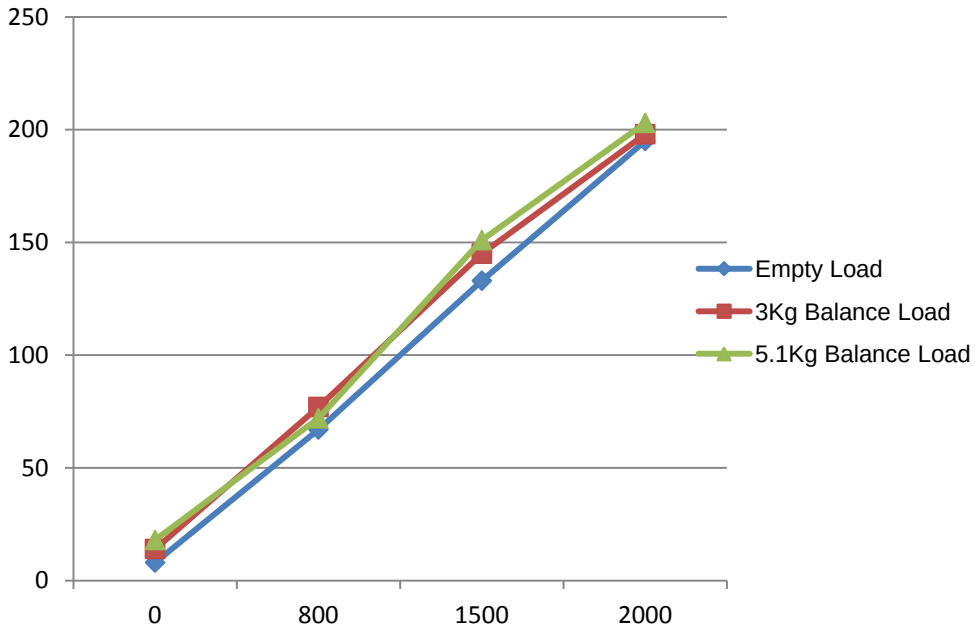

3.5 Conclusion

The linearity and convergence of the data of OOB diction perform well on the BLDC washers, and the data difference is less than 30g between different washers. This OOB diction solution is adopted on the BLDC washers and the performance is stable.

4 Document History

Document Title: AN205354 - FM3 Microcontroller with OOB Solution on BLDC Washer

Document Number: 002-05354

Revision	ECN	Orig. of Change	Submission Date	Description of Change
**	-	BOZH	02/29/2012	Initial Release
*A	5046421	BOZH	12/11/2015	Migrated Spansion Application Note from MCU-AN-510114-E-10 to Cypress format
*B	5824699	AESATMP8	07/19/2017	Updated logo and Copyright.

Worldwide Sales and Design Support

Cypress maintains a worldwide network of offices, solution centers, manufacturer's representatives, and distributors. To find the office closest to you, visit us at Cypress Locations.

Products

ARM® Cortex® Microcontrollers	cypress.com/arm
Automotive	cypress.com/automotive
Clocks & Buffers	cypress.com/clocks
Interface	cypress.com/interface
Internet of Things	cypress.com/iot
Memory	cypress.com/memory
Microcontrollers	cypress.com/mcu
PSoC	cypress.com/psoc
Power Management ICs	cypress.com/pmic
Touch Sensing	cypress.com/touch
USB Controllers	cypress.com/usb
Wireless Connectivity	cypress.com/wireless

PSoC® Solutions

PSoC 1 | PSoC 3 | PSoC 4 | PSoC 5LP | PSoC 6

Cypress Developer Community

Forums | WICED IOT Forums | Projects | Videos | Blogs | Training | Components

Technical Support

cypress.com/support

All other trademarks or registered trademarks referenced herein are the property of their respective owners.

Cypress Semiconductor
198 Champion Court
San Jose, CA 95134-1709

© Cypress Semiconductor Corporation, 2012-2017. This document is the property of Cypress Semiconductor Corporation and its subsidiaries, including Spansion LLC ("Cypress"). This document, including any software or firmware included or referenced in this document ("Software"), is owned by Cypress under the intellectual property laws and treaties of the United States and other countries worldwide. Cypress reserves all rights under such laws and treaties and does not, except as specifically stated in this paragraph, grant any license under its patents, copyrights, trademarks, or other intellectual property rights. If the Software is not accompanied by a license agreement and you do not otherwise have a written agreement with Cypress governing the use of the Software, then Cypress hereby grants you a personal, non-exclusive, nontransferable license (without the right to sublicense) (1) under its copyright rights in the Software (a) for Software provided in source code form, to modify and reproduce the Software solely for use with Cypress hardware products, only internally within your organization, and (b) to distribute the Software in binary code form externally to end users (either directly or indirectly through resellers and distributors), solely for use on Cypress hardware product units, and (2) under those claims of Cypress's patents that are infringed by the Software (as provided by Cypress, unmodified) to make, use, distribute, and import the Software solely for use with Cypress hardware products. Any other use, reproduction, modification, translation, or compilation of the Software is prohibited.

TO THE EXTENT PERMITTED BY APPLICABLE LAW, CYPRESS MAKES NO WARRANTY OF ANY KIND, EXPRESS OR IMPLIED, WITH REGARD TO THIS DOCUMENT OR ANY SOFTWARE OR ACCOMPANYING HARDWARE, INCLUDING, BUT NOT LIMITED TO, THE IMPLIED WARRANTIES OF MERCHANTABILITY AND FITNESS FOR A PARTICULAR PURPOSE. To the extent permitted by applicable law, Cypress reserves the right to make changes to this document without further notice. Cypress does not assume any liability arising out of the application or use of any product or circuit described in this document. Any information provided in this document, including any sample design information or programming code, is provided only for reference purposes. It is the responsibility of the user of this document to properly design, program, and test the functionality and safety of any application made of this information and any resulting product. Cypress products are not designed, intended, or authorized for use as critical components in systems designed or intended for the operation of weapons, weapons systems, nuclear installations, life-support devices or systems, other medical devices or systems (including resuscitation equipment and surgical implants), pollution control or hazardous substances management, or other uses where the failure of the device or system could cause personal injury, death, or property damage ("Unintended Uses"). A critical component is any component of a device or system whose failure to perform can be reasonably expected to cause the failure of the device or system, or to affect its safety or effectiveness. Cypress is not liable, in whole or in part, and you shall and hereby do release Cypress from any claim, damage, or other liability arising from or related to all Unintended Uses of Cypress products. You shall indemnify and hold Cypress harmless from and against all claims, costs, damages, and other liabilities, including claims for personal injury or death, arising from or related to any Unintended Uses of Cypress products.

Cypress, the Cypress logo, Spansion, the Spansion logo, and combinations thereof, WICED, PSoC, CapSense, EZ-USB, F-RAM, and Traveo are trademarks or registered trademarks of Cypress in the United States and other countries. For a more complete list of Cypress trademarks, visit cypress.com. Other names and brands may be claimed as property of their respective owners.