

THIS SPEC IS OBSOLETE

Spec No: 002-05346

Spec Title: AN205346 - F2MC - 8FX FAMILY, MB9500 SERIES, POWER FACTOR CORRECTION

Replaced by: NONE

AN205346

F²MC - 8FX Family, MB9500 Series, Power Factor Correction

This document describes the principle and usage of PFC along with Power Factor. Power Factor is a parameter that gives the amount of working power used by any system in terms of the total apparent power. Power Factor becomes an important measurable quantity because it often results in significant power savings.

Contents

1 Introduction....1
1.1 Purpose....1
1.2 Document Overview....1
2 Significance of Power Factor....2
2.1 Overview....2
2.2 Harmonic Introduce....3
3 Principle of PFC....4
3.1 Overview....4
3.2 Power Factor Correction Topologies....4
4 PFC Implementation....7
4.1 Smart Power Module of PFC....7
4.2 PFC Implementation....9
5 Additional Information....11
Document History....12

OBSOLETE

1 Introduction

1.1 Purpose

This document describes the principle and usage of PFC.

1.2 Document Overview

The rest of document is organized as the following:

Chapter 2 explains the Significance of Power Factor.

Chapter 3 explains Principle of PFC.

Chapter4 explains the PFC Implementation.

Chapter5 explains Additional Information.

2 Significance of Power Factor

Significance of power factor

2.1 Overview

Power Factor is a parameter that gives the amount of working power used by any system in terms of the total apparent power. Power Factor becomes an important measurable quantity because it often results in significant power savings.

Typical waveforms of current with and without PFC are shown in Figure 1 below.

Figure 1. Waveform with/without PFC

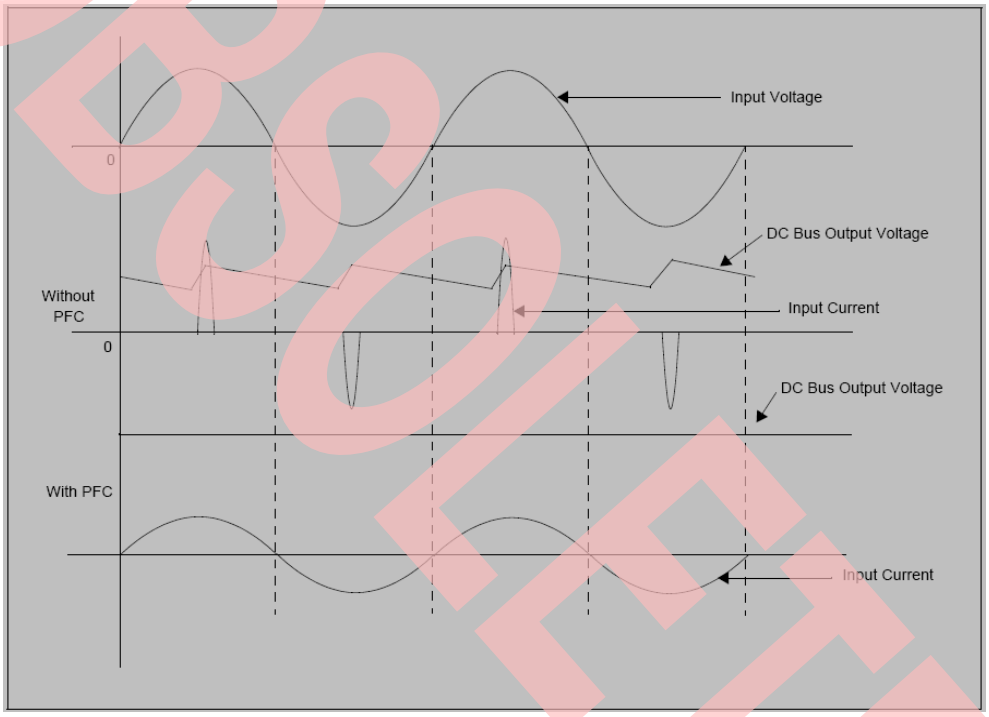

These waveforms illustrate that PFC can improve the input current drawn from the mains supply and reduce the DC bus voltage ripple.

The objective of PFC is to make the loading for a power supply look like a simple resistor. This allows the power distribution system to operate more efficiently, reducing energy consumption.

When Power Factor deviates from a constant, the input contains phase displacement, harmonic distortion or both, and either one degrades the Power Factor.

The remaining power that is lost as Reactive Power in the system is due to reasons:

- Phase shift of current with respect to voltage, resulting in displacement.
- Harmonic content present in current, resulting in distortion.

OBSOLETE

2.2 Harmonic Introduce

Current harmonics are sinusoidal waves that are integral multiples of fundamental wave.

Source of current harmonics:

- Power Electronic Equipment
- Auxiliary Equipment
- Saturable Inductive Equipment

Problems created by current harmonics:

- Erroneous operation of control system
- Damage to sensitive electronic equipment
- Nuisance tripping of circuit breakers and blowing fuses
- Excessive overheating of capacitors, transformers, motors, lighting ballasts and other electrical equipment
- Interference with near electronic equipment

To reduce these problems, the current drawn from main supply needs to be shaped similar to that of voltage wave profile.

By making power converter appear as a linear resistance to the main supply voltage, the input current shape can be made to follow the input voltage wave.

OBSOLETE

3 Principle of PFC

Principle of PFC

3.1 Overview

In order to making power converter appear as a linear resistance despite having reactive passive elements like inductors, capacitors and active switching elements like MOSFETs and IGBTs, the answer lies in the fact that PFC is a low-frequency requirement. Therefore, the converter need not be resistive at all frequencies, provided a filtering mechanism exists to remove the high-frequency ripples.

The basic elements present in a converter are an inductor and a capacitor, which are zero order elements. This means that these elements cannot store energy in a single switching cycle due to their fundamental properties.

Active PFC must control both the input current and the output voltage. The current is shaped by the rectified live voltage so that the input to the converter appears to be resistive. The output voltage is controlled by changing the average amplitude of the current programming signal.

3.2 Power Factor Correction Topologies

3.2.1 Boost PFC Circuit

The boost converter produces a voltage higher than the input rectified voltage, thereby giving a switch(MOSFET) voltage rating of Vout. Figure 2 shows the circuit for the boost PFC stage. Figure 3 shows the boost PFC input current shape.

Figure 2. BOOST PFC

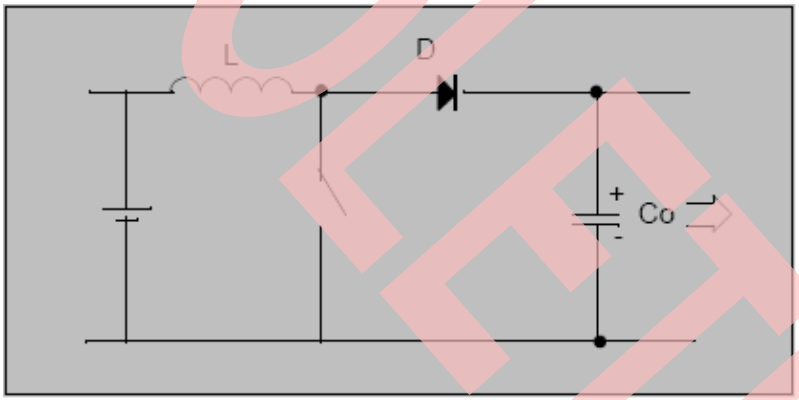

Figure 3. Boost PFC input current shape

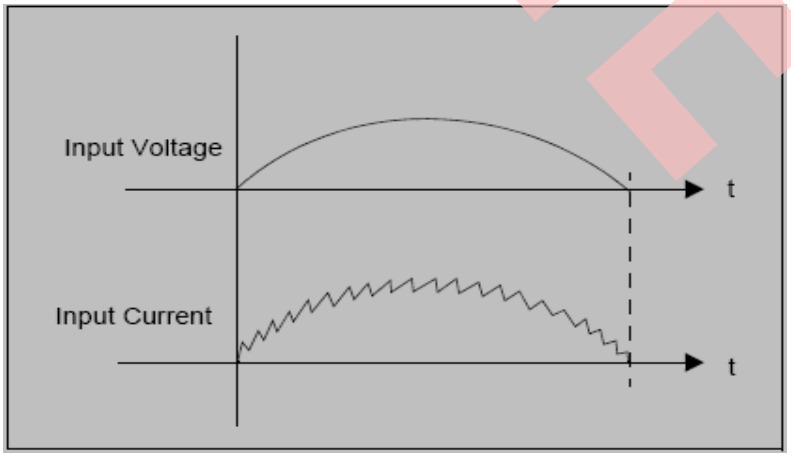

OBSOLETE

Closing or opening switch with a fixed rate as Figure 2. But the duty is based on the value of input voltage and voltage on capacitor. When input voltage is higher than capacitor voltage, the duty is small. When input voltage is lower than capacitor voltage, the duty should be large enough for the inductor having a way to discharge.

3.2.2 Buck PFC Circuit

In a buck PFC circuit, the output DC voltage is less than the input rectified voltage. Large filters are needed to suppress switching ripples and this circuit produces considerable Power Factor improvement. The switch(MOSFET) is rated to Vin this case. Figure 3-3 shows the buck PFC input current shape. Figure 3-4 shows the buck PFC input current shape.

Figure 4. Buck PFC circuit

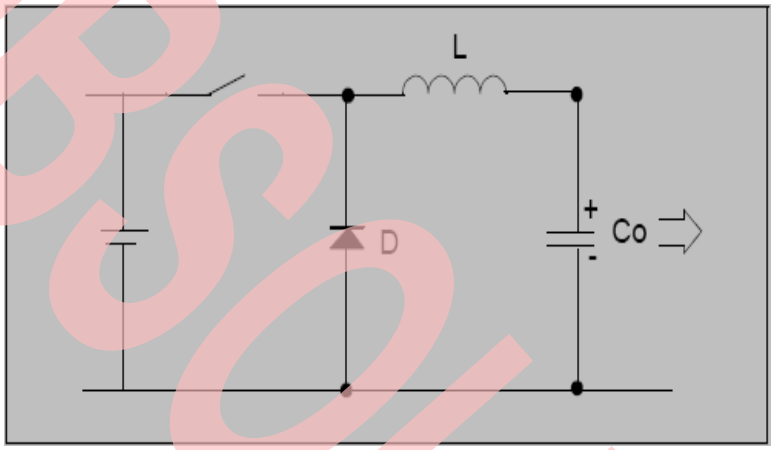

Figure 5. Buck PFC input current shape

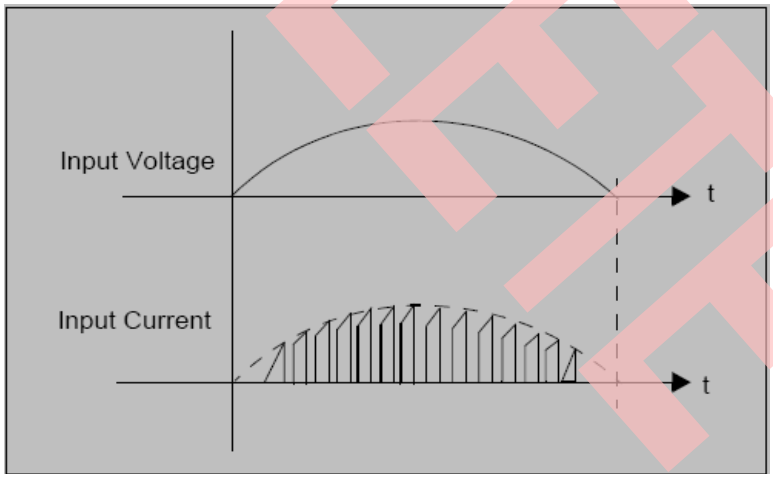

OBSOLETE

3.2.3 Buck/Boost PFC Circuit

In the buck/boost PFC circuit, the output DC voltage may be either less or greater than the input rectified voltage. High Power Factor can be achieved in this case. The switch (MOSFET) is rated to (Vin + Vout). Figure 6 shows the circuit for the buck/boost PFC stage. Figure 7 shows the buck/boost PFC input current shape.

Figure 6. Buck/Boost PFC circuit

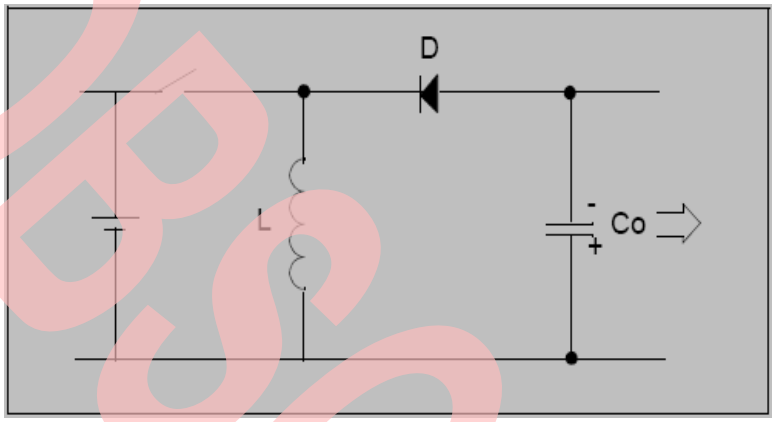

Figure 7. Buck/Boost PFC input current shape

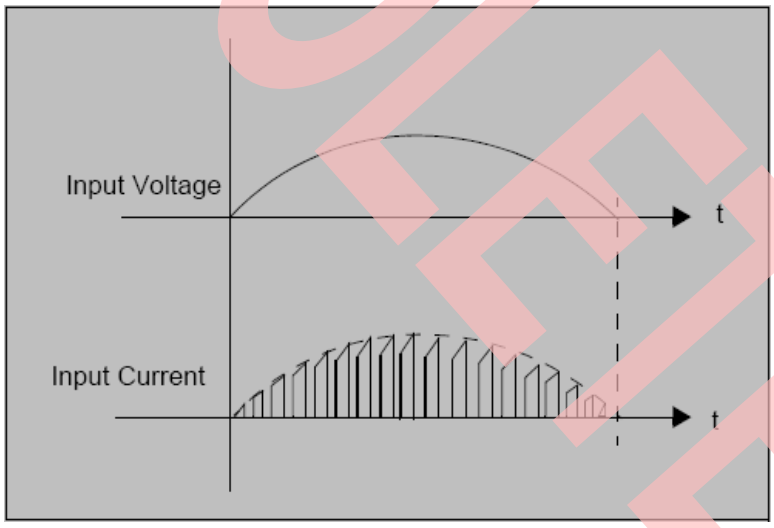

Regardless of the input line voltage and output load variations, input current drawn by the buck converter and the buck boost converter is always discontinuous. However, in the case of a boost converter, input current drawn is always continuous if it is operating in Continuous Conduction Mode. This helps to reduce the input current harmonics.

OBSOLETE

4 PFC Implementation

This section provides notes on PFC implementation

4.1 Smart Power Module of PFC

FPAB30BH60 is an advanced smart power module of PFC that Fairchild has developed and designed mainly targeting mid-power application especially for a conditioner. It combines optimized circuit protection and drive IC matched to high frequency switching IGBTs. System reliability is further enhanced by the integrated under-voltage lock-out and over-current protection function.

Figure 8. Pin configuration

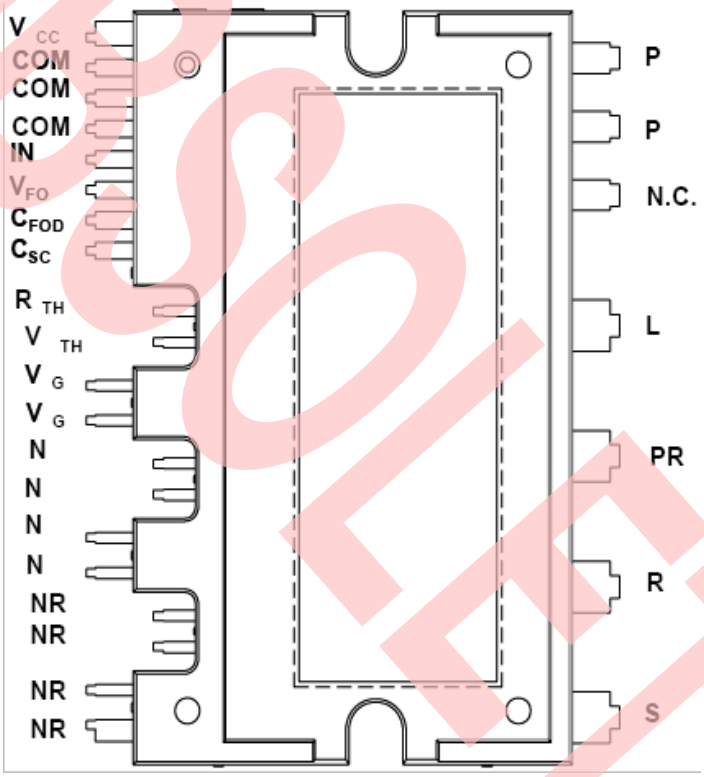

OBSOLETE

Figure 9. Pin description

Pin Number	Pin Name	Pin Description
1	V_{CC}	Common Bias Voltage for IC and IGBTs Driving
2,3,4	COM	Common Supply Ground
5	$IN_{(R)}$	Signal Input for Low-side R-phase IGBT
6	V_{FO}	Fault Output
7	C_{FOD}	Capacitor for Fault Output Duration Time Selection
8	C_{SC}	Capacitor (Low-pass Filter) for Over Current Detection
9	$R_{(TH)}$	NTC Thermistor terminal
10	$V_{(TH)}$	NTC Thermistor terminal
11,12	Vg	IGBT gate dummy
13~16	N	IGBT emitter
17~20	N_R	Negative DC-Link of Rectifier
21,22	P	Positive Rail of DC–Link
23	N.C	No Connection
24	L	Reactor connection pin
25	P_R	Positive DC–Link of Rectifier
26	R	AC input for R-phase
27	S	AC input for S-phase

Figure 10. Internal equivalent circuit and input/output pins

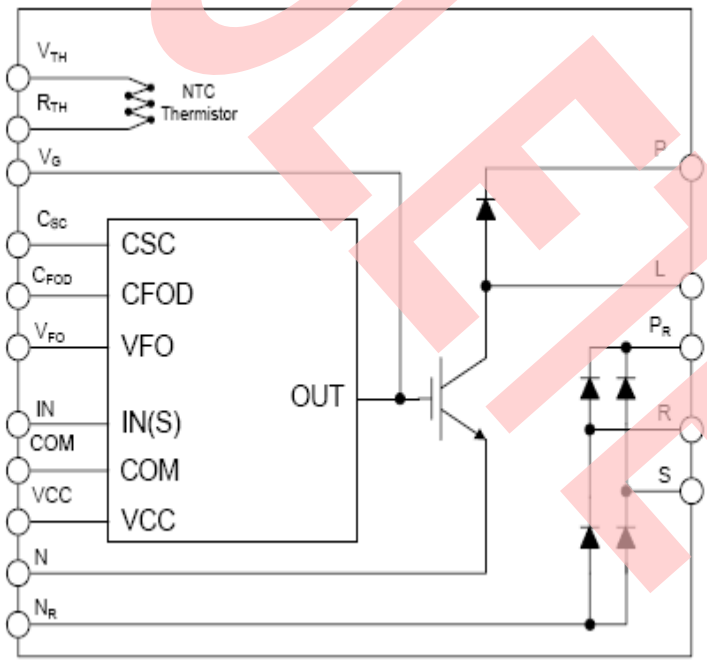

FPAB30BH60 datasheet: http://www.fairchildsemi.com/pf/FP/FPAB30BH60.html

OBSOLETE

4.2 PFC Implementation

In this part, it mainly talks about the implementation in hardware and software.

4.2.1 Block Diagram for PFC Implementation

Figure 11. Block diagram for PFC implementation

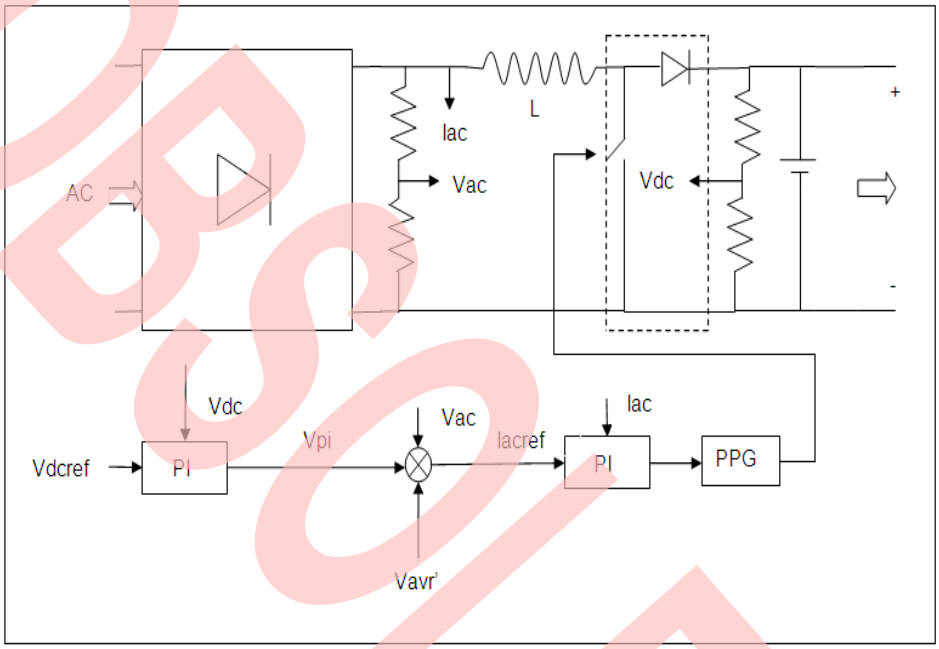

4.2.2 PFC hardware interface

PFC hardware interface is shown in Figure 12 below.

Figure 12. PFC Hardware interface

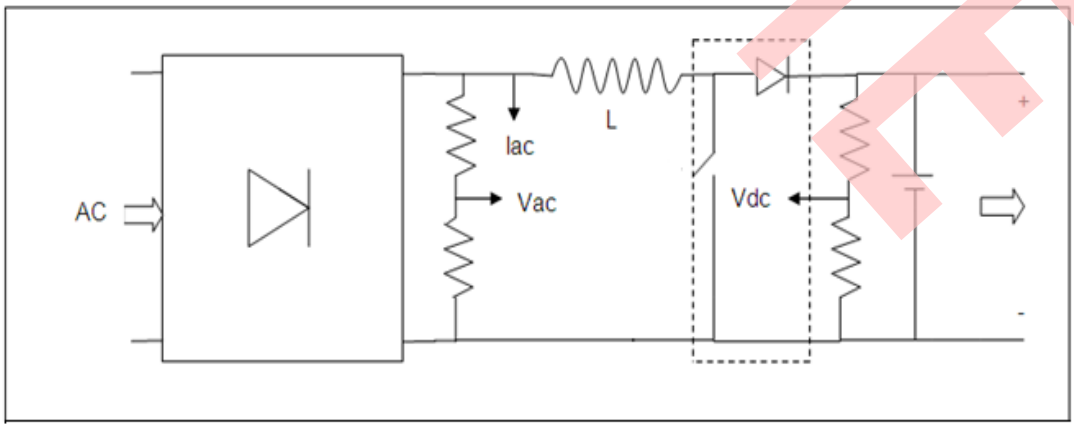

The dotted line frame in Figure 12 is integrated into FPAB30BH60.

OBSOLETE

4.2.3 PFC software arithmetic

Software block is shown below in Figure 13.

Figure 13. PFC software block

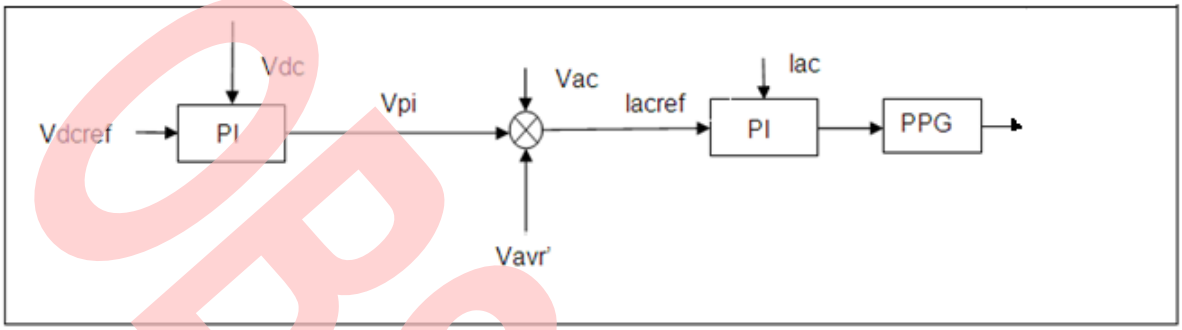

Vavr' :Vavr(the average value of Vac)multiply 1/(Vavr*Vavr).

Output of PPG is to control the duty of IGBT integrated in FPAB30BH60.

4.2.4 PFC software arithmetic implementation

This part mainly mentions functions:

```
Function Name: Init_PFC
Description:   Initialize PFC
Input:         None
Output:        None
```

```
Function Name: PFC_Stop
Description:   Initialize PFC
Input:         None
Output:        None
```

```
Function Name: PFC_Start
Description:   Start PFC
Input:         None
Output:        None
```

OBSOLETE

5 Additional Information

For more information on Cypress Semiconductors Products, please visit the following websites:

http://www.cypress.com/cypress-microcontrollers

http://www.cypress.com/cypress-mcu-product-softwareexamples

OBSOLETE

Document History

Document Title: AN205346 – F²MC - 8FX Family, MB9500 Series, Power Factor Correction

Document Number: 002-05346

Revision	ECN	Orig. of Change	Submission Date	Description of Change
**	-	Jason Lv.	03/17/2011	V1.0, First Draft
		Mona Chen	06/06/2011	Change the document format
*A	5267119	WJLV	05/09/2016	Migrated Spansion Application Note “MCU-AN-500016-E-12” to Cypress format.
*B	6329249	SSAS	10/02/2018	Obsoleted

OBSOLETE

Worldwide Sales and Design Support

Cypress maintains a worldwide network of offices, solution centers, manufacturer's representatives, and distributors. To find the office closest to you, visit us at Cypress Locations.

Products

ARM® Cortex® Microcontrollers	cypress.com/arm
Automotive	cypress.com/automotive
Clocks & Buffers	cypress.com/clocks
Interface	cypress.com/interface
Lighting & Power Control	cypress.com/powerpsoc
Memory	cypress.com/memory
PSoC	cypress.com/psoc
Touch Sensing	cypress.com/touch
USB Controllers	cypress.com/usb
Wireless/RF	cypress.com/wireless

PSoC® Solutions

PSoC 1 | PSoC 3 | PSoC 4 | PSoC 5LP

Cypress Developer Community

Forums | Projects | Videos | Blogs | Training | Components

Technical Support

cypress.com/support

PSoC is a registered trademark and PSoC Creator is a trademark of Cypress Semiconductor Corporation. All other trademarks or registered trademarks referenced herein are the property of their respective owners.

Cypress Semiconductor
198 Champion Court
San Jose, CA 95134-1709

Phone : 408-943-2600
Fax : 408-943-4730
Website : www.cypress.com

© Cypress Semiconductor Corporation,2011-2018. This document is the property of Cypress Semiconductor Corporation and its subsidiaries, including Spansion LLC ("Cypress"). This document, including any software or firmware included or referenced in this document ("Software"), is owned by Cypress under the intellectual property laws and treaties of the United States and other countries worldwide. Cypress reserves all rights under such laws and treaties and does not, except as specifically stated in this paragraph, grant any license under its patents, copyrights, trademarks, or other intellectual property rights. If the Software is not accompanied by a license agreement and you do not otherwise have a written agreement with Cypress governing the use of the Software, then Cypress hereby grants you a personal, non-exclusive, nontransferable license (without the right to sublicense) (1) under its copyright rights in the Software (a) for Software provided in source code form, to modify and reproduce the Software solely for use with Cypress hardware products, only internally within your organization, and (b) to distribute the Software in binary code form externally to end users (either directly or indirectly through resellers and distributors), solely for use on Cypress hardware product units, and (2) under those claims of Cypress's patents that are infringed by the Software (as provided by Cypress, unmodified) to make, use, distribute, and import the Software solely for use with Cypress hardware products. Any other use, reproduction, modification, translation, or compilation of the Software is prohibited.

TO THE EXTENT PERMITTED BY APPLICABLE LAW, CYPRESS MAKES NO WARRANTY OF ANY KIND, EXPRESS OR IMPLIED, WITH REGARD TO THIS DOCUMENT OR ANY SOFTWARE OR ACCOMPANYING HARDWARE, INCLUDING, BUT NOT LIMITED TO, THE IMPLIED WARRANTIES OF MERCHANTABILITY AND FITNESS FOR A PARTICULAR PURPOSE. To the extent permitted by applicable law, Cypress reserves the right to make changes to this document without further notice. Cypress does not assume any liability arising out of the application or use of any product or circuit described in this document. Any information provided in this document, including any sample design information or programming code, is provided only for reference purposes. It is the responsibility of the user of this document to properly design, program, and test the functionality and safety of any application made of this information and any resulting product. Cypress products are not designed, intended, or authorized for use as critical components in systems designed or intended for the operation of weapons, weapons systems, nuclear installations, life-support devices or systems, other medical devices or systems (including resuscitation equipment and surgical implants), pollution control or hazardous substances management, or other uses where the failure of the device or system could cause personal injury, death, or property damage ("Unintended Uses"). A critical component is any component of a device or system whose failure to perform can be reasonably expected to cause the failure of the device or system, or to affect its safety or effectiveness. Cypress is not liable, in whole or in part, and you shall and hereby do release Cypress from any claim, damage, or other liability arising from or related to all Unintended Uses of Cypress products. You shall indemnify and hold Cypress harmless from and against all claims, costs, damages, and other liabilities, including claims for personal injury or death, arising from or related to any Unintended Uses of Cypress products.

Cypress, the Cypress logo, Spansion, the Spansion logo, and combinations thereof, PSoC, CapSense, EZ-USB, F-RAM, and Traveo are trademarks or registered trademarks of Cypress in the United States and other countries. For a more complete list of Cypress trademarks, visit cypress.com. Other names and brands may be claimed as property of their respective owners.

OBSOLETE