The following document contains information on Cypress products. The document has the series name, product name, and ordering part numbering with the prefix “MB”. However, Cypress will offer these products to new and existing customers with the series name, product name, and ordering part number with the prefix “CY”.

How to Check the Ordering Part Number

1. Go to www.cypress.com/pcn.
2. Enter the keyword (for example, ordering part number) in the **SEARCH PCNS** field and click **Apply**.
3. Click the corresponding title from the search results.
4. Download the Affected Parts List file, which has details of all changes

For More Information

Please contact your local sales office for additional information about Cypress products and solutions.

About Cypress

Cypress is the leader in advanced embedded system solutions for the world's most innovative automotive, industrial, smart home appliances, consumer electronics and medical products. Cypress' microcontrollers, analog ICs, wireless and USB-based connectivity solutions and reliable, high-performance memories help engineers design differentiated products and get them to market first. Cypress is committed to providing customers with the best support and development resources on the planet enabling them to disrupt markets by creating new product categories in record time. To learn more, go to www.cypress.com.

AN205316

FR, MB91460, Pulse Frequency Modulator

The PFM is used to generate pulses of a short duration in a long period. This is an alternative to using PWM signals in some applications. The 16-bit pulse frequency modulator consists of two 16-bit down-counters, two 16-bit reload registers, pre-scalars for generating the internal count clocks and control/status registers.

Contents

1 Introduction....1
1.1 Key Features....1
2 Pulse Frequency Modulator....2
2.1 Block Diagrams....2
2.2 Registers....3
2.3 PFM Counter Operation....4
2.4 Calculation....5
3 Software Example....6
3.1 Basic Functionality of the PFM....6
4 Additional Information....6
Document History....7

1 Introduction

The PFM is used to generate pulses of a short duration in a long period. This is an alternative to using PWM signals in some applications.

The 16-bit pulse frequency modulator consists of two 16-bit down-counters, two 16-bit reload registers, pre-scalars for generating the internal count clocks and control/status registers.

1.1 Key Features

- Two independent programmable 16-bit down-counters generating low and high pulses
- The input clock (count clock) can be selected from pre-scaled internal clocks (the peripheral clock (CLKP) divided by 2/8/32/64/128) separately for each counter.
- The mark level and output waveform can be inverted.

2 Pulse Frequency Modulator

The basic functionality of pulse frequency modulator is explained

2.1 Block Diagrams

Figure 1 shows the internal block diagram of a Pulse Frequency Modulator.

Figure 1. PFM Block Diagram

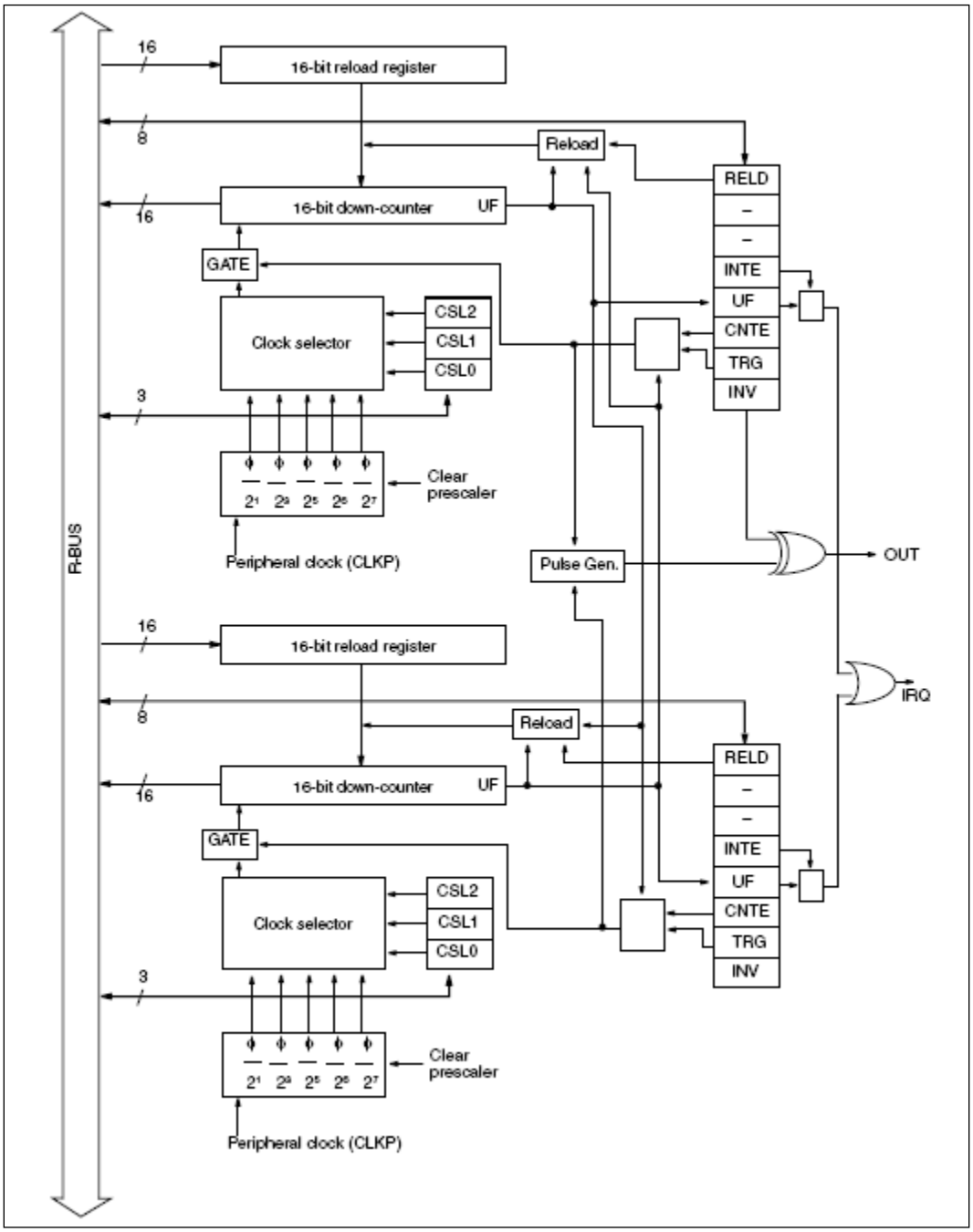

2.2 Registers

2.2.1 Control status register (P0TMCSR, P1TMCSR)

Controls the operation mode, shows the status of the reload counter and interrupts for the 16-bit reload. Only change the value of bits other than UF and TRG when CNTE = "0".

Table 1. P0TMCSR and P1TMCSR

Bit No.	Name	Explanation	Value	Operation
15	–	*Reserved*	-	*Always set to '0'*
14	INV	The output signal inversion bit	0	counter 0 high level, counter 1 low level
			1	counter 0 low level, counter 1 high level
13	–	*Reserved*	-	*Always set to '0'*
12-10	CSL2, CSL1, CSL0	The count clock select bits	000	CLKP / 2^1
			001	CLKP / 2^3
			010	CLKP / 2^5
			011	*resaved*
			100	Clock disabled
			101	CLKP / 2^6
			110	CLKP / 2^7
			111	Clock disabled
9	–	*Reserved*	-	*Always set to '0'*
8	MD1	Mode Bit	0	Setting prohibited
			1	Necessary for PFM operation
7-5	–	*Reserved*	-	*Always set to '010'*
4	RELD	This bit enables reload operations.	0	The count operation stops when an underflow occurs due to underflow
			1	The counter operates in reload mode
3	INTE	Interrupt request enable bit	0	Interrupt request is generated when the UF bit changes to "1".
			1	no interrupt requests are generated
2	UF	Underflow flag	0	Read: No counter underflow Write: Clears the Flag
			1	Read: Counter underflow occurred Write: No effect
1	CNTE	Counter count enable bit	0	stops count operation
			1	sets the counter to wait for a trigger
0	TRG	Software trigger bit	0	Write: No effect
			1	Write: Software trigger applied

2.2.2 16-bit Counter Register (P0TMR, P1TMR)

Reading this register reads the count value of the 16-bit down counter. Its initial value is indeterminate. Always read this register using 16-bit data transfer instructions Output Compare Unit

2.2.3 16-bit Reload Register (P0TMRLR, P1TMRLR)

The 16-bit reload register stores the initial count value. Its initial value is indeterminate. Always write to this register using 16-bit data transfer instructions.

2.2.4 Port function register (PFRxx, EPFRxx)

To enable PFM output one should enable its corresponding port function register. Please refer data sheet of corresponding device for more information

2.3 PFM Counter Operation

2.3.1 Reload Counter Operation

This section describes the operations of the 16-bit reload counter

The Peripheral Clock (CLKP) divided by 2, 8, 32, 64 or 128 can be selected as the clock source when operating the counter from an internal clock. Writing "1" to both the `CNTE` and `TRG` bits in the control status register enables and starts counting simultaneously.

One clock cycle (CLKP divided by 2/8/32/64 or 128) is required from the counter start trigger

Figure 2. Counter activation and operation timing

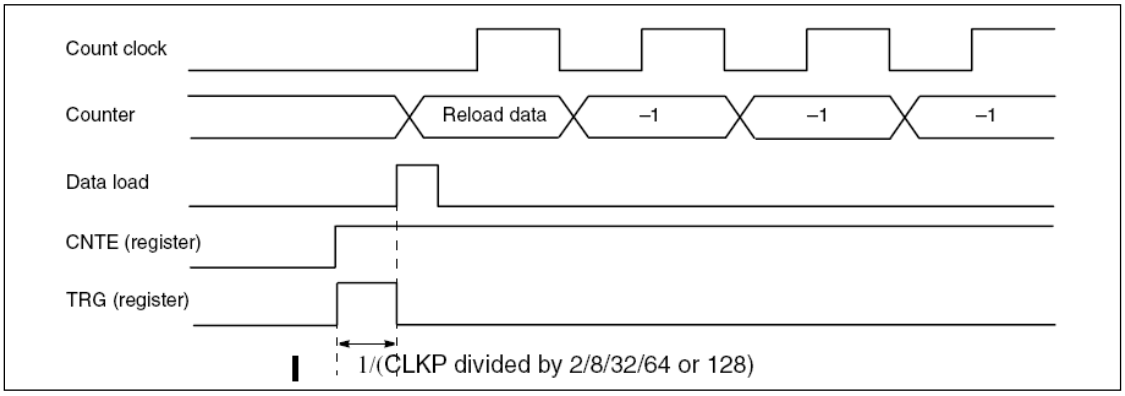

An underflow occurs when the counter value changes from 0000H to FFFFH. Therefore, an underflow occurs after "reload register setting + 1" counts. If the RELD bit in the control register is "1" when the underflow occurs, the contents of the reload register are loaded into the counter and counting continues. When RELD is "0", counting stops with the counter at FFFFH. The UF bit in the control register is set when the underflow occurs. If the INTE bit is "1" at this time, an interrupt request is generated.

Figure 3. Underflow Operation Timing

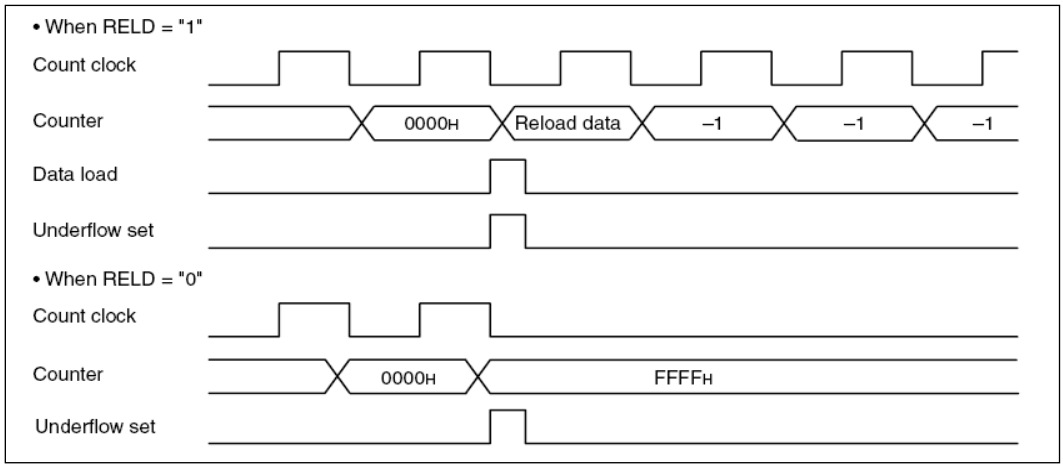

2.3.2 PFM Operation and Setting

This section describes the following operations of the 16-bit pulse frequency modulator (combining the functionality of both reload counters).

The underflow output of reload counter channel 0 is connected internally to the trigger input reload counter channel. The underflow output of reload counter channel 1 is connected internally to the trigger input of reload counter channel 0.

Both counters must be set up with RELD = “0”. Counter 0 should then be started by software trigger TRG = “1”. By starting counter 0 a high level is generated at the output. At the underflow condition of counter 0, counter 1 is automatically reloaded and started by the internal trigger (falling edge, set MOD1 = “1” for both counters) and a low level is generated at the output. At the underflow condition of counter 1, counter 0 is automatically reloaded and started by the internal trigger and a high level is generated at the output.

Interrupts can be set up on underflow condition of counter 0, counter 1 or both. The interrupts of counter 0 and counter 1 are combined together (logical OR).

The default output is low level if both CNTE = “0”, and both INV = “0”.

2.4 Calculation

If we need to generate a following waveform with T_{High} = 20ms and T_{Low} = 100ms

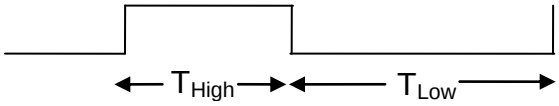

We can calculate T_{High} as,

T_{High} = (P0TMRLR + 1) * (1/ (CLKP/ P0TMCSR: CTS))

Let us assume CLKP is 16MHz and P0TMCSR: CTS is B’010

Than,

T_{High} = (P0TMRLR + 1) * (1/ (16MHz/32))

I.e. P0TMRLR = (20ms / (2µS)) + 1 = 10001

Similarly,

T_{Low} = (P1TMRLR + 1) * (1/ (CLKP/ P1TMCSR: CTS))

Let us assume P1TMCSR: CTS is B’101

Than,

T_{Low} = (P0TMRLR + 1) * (1/ (16MHz/64))

I.e. P0TMRLR = (100ms / (4µS)) + 1 = 25001

3 Software Example

Example for pulse frequency modulator

3.1 Basic Functionality of the PFM

The following example shows how to set up the Pulse Frequency Modulator.

```
/*                                  SAMPLE CODE                                  */
/*-------------------------------------------------------------------------------*/
void InitPFM(void)
{
   PFR16_D6 = 1;
   EPFR16_D6 = 1;
   P0TMRLR = 0x2711;       //Reload Register
   P0TMCSR_INV = 0; //default level
   P0TMCSR_CSL = 2; //CLKP / 2^5
   P0TMCSR_MOD1 = 1;       //PFM operation
   P0TMCSR_RELD = 0;    //Count operation stops when an underflow occurs
   P0TMCSR_INTE = 1;       //Interrupt enabled
   P0TMCSR_UF = 0;  // Clear underflow flag
   P0TMCSR_CNTE = 1;    //sets the counter to wait for a trigger

   P1TMRLR = 0x61A9;       //Reload Register
   P1TMCSR_INV = 0; //default level
   P1TMCSR_CSL = 5; //CLKP / 2^6
   P1TMCSR_MOD1 = 1;       //PFM operation
   P1TMCSR_RELD = 0;    //Count operation stops when an underflow occurs
   P1TMCSR_INTE = 1;       //Interrupt enabled
   P1TMCSR_UF = 0;  // Clear underflow flag
   P1TMCSR_CNTE = 1;  //sets the counter to wait for a trigger

   P0TMCSR_TRG = 1;    //TRG applies a software trigger

}
__interrupt void PFMIRQHandler (void)
{
   if(P0TMCSR_UF == 0)
   {
       P0TMCSR_UF = 0;
   }
   else if(P1TMCSR_UF == 0)
   {
       P1TMCSR_UF = 0;
   }
   else
   {
       P1TMCSR_UF = 0;
```

4 Additional Information

Information about Cypress Microcontrollers can be found on the following Internet page:

http://www.cypress.com/cypress-microcontrollers

The software examples related to this application note is:

91460_PFM

It can be found on the following Internet page:

http://www.cypress.com/cypress-mcu-product-softwareexamples

Document History

Document Title: AN205316 - FR, MB91460, Pulse Frequency Modulator

Document Number: 002-05316

Revision	ECN	Orig. of Change	Submission Date	Description of Change
**	-	NOFL	06/05/2008	V1.0, First draft, HPi
*A	5090527	NOFL	04/12/2016	Converted Spansion Application Note “MCU-AN-300065-E-V10” to Cypress format
*B	5873413	AESATMP9	09/05/2017	Updated logo and copyright.

Worldwide Sales and Design Support

Cypress maintains a worldwide network of offices, solution centers, manufacturer's representatives, and distributors. To find the office closest to you, visit us at Cypress Locations.

Products

ARM® Cortex® Microcontrollers	cypress.com/arm
Automotive	cypress.com/automotive
Clocks & Buffers	cypress.com/clocks
Interface	cypress.com/interface
Internet of Things	cypress.com/iot
Memory	cypress.com/memory
Microcontrollers	cypress.com/mcu
PSoC	cypress.com/psoc
Power Management ICs	cypress.com/pmic
Touch Sensing	cypress.com/touch
USB Controllers	cypress.com/usb
Wireless Connectivity	cypress.com/wireless

PSoC® Solutions

PSoC 1 | PSoC 3 | PSoC 4 | PSoC 5LP | PSoC 6

Cypress Developer Community

Forums | WICED IOT Forums | Projects | Videos | Blogs | Training | Components

Technical Support

cypress.com/support

All other trademarks or registered trademarks referenced herein are the property of their respective owners.

Cypress Semiconductor
198 Champion Court
San Jose, CA 95134-1709

© Cypress Semiconductor Corporation, 2008-2017. This document is the property of Cypress Semiconductor Corporation and its subsidiaries, including Spansion LLC ("Cypress"). This document, including any software or firmware included or referenced in this document ("Software"), is owned by Cypress under the intellectual property laws and treaties of the United States and other countries worldwide. Cypress reserves all rights under such laws and treaties and does not, except as specifically stated in this paragraph, grant any license under its patents, copyrights, trademarks, or other intellectual property rights. If the Software is not accompanied by a license agreement and you do not otherwise have a written agreement with Cypress governing the use of the Software, then Cypress hereby grants you a personal, non-exclusive, nontransferable license (without the right to sublicense) (1) under its copyright rights in the Software (a) for Software provided in source code form, to modify and reproduce the Software solely for use with Cypress hardware products, only internally within your organization, and (b) to distribute the Software in binary code form externally to end users (either directly or indirectly through resellers and distributors), solely for use on Cypress hardware product units, and (2) under those claims of Cypress's patents that are infringed by the Software (as provided by Cypress, unmodified) to make, use, distribute, and import the Software solely for use with Cypress hardware products. Any other use, reproduction, modification, translation, or compilation of the Software is prohibited.

TO THE EXTENT PERMITTED BY APPLICABLE LAW, CYPRESS MAKES NO WARRANTY OF ANY KIND, EXPRESS OR IMPLIED, WITH REGARD TO THIS DOCUMENT OR ANY SOFTWARE OR ACCOMPANYING HARDWARE, INCLUDING, BUT NOT LIMITED TO, THE IMPLIED WARRANTIES OF MERCHANTABILITY AND FITNESS FOR A PARTICULAR PURPOSE. To the extent permitted by applicable law, Cypress reserves the right to make changes to this document without further notice. Cypress does not assume any liability arising out of the application or use of any product or circuit described in this document. Any information provided in this document, including any sample design information or programming code, is provided only for reference purposes. It is the responsibility of the user of this document to properly design, program, and test the functionality and safety of any application made of this information and any resulting product. Cypress products are not designed, intended, or authorized for use as critical components in systems designed or intended for the operation of weapons, weapons systems, nuclear installations, life-support devices or systems, other medical devices or systems (including resuscitation equipment and surgical implants), pollution control or hazardous substances management, or other uses where the failure of the device or system could cause personal injury, death, or property damage ("Unintended Uses"). A critical component is any component of a device or system whose failure to perform can be reasonably expected to cause the failure of the device or system, or to affect its safety or effectiveness. Cypress is not liable, in whole or in part, and you shall and hereby do release Cypress from any claim, damage, or other liability arising from or related to all Unintended Uses of Cypress products. You shall indemnify and hold Cypress harmless from and against all claims, costs, damages, and other liabilities, including claims for personal injury or death, arising from or related to any Unintended Uses of Cypress products.

Cypress, the Cypress logo, Spansion, the Spansion logo, and combinations thereof, WICED, PSoC, CapSense, EZ-USB, F-RAM, and Traveo are trademarks or registered trademarks of Cypress in the United States and other countries. For a more complete list of Cypress trademarks, visit cypress.com. Other names and brands may be claimed as property of their respective owners.