Please note that Cypress is an Infineon Technologies Company.
The document following this cover page is marked as “Cypress” document as this is the company that originally developed the product. Please note that Infineon will continue to offer the product to new and existing customers as part of the Infineon product portfolio.

Continuity of document content
The fact that Infineon offers the following product as part of the Infineon product portfolio does not lead to any changes to this document. Future revisions will occur when appropriate, and any changes will be set out on the document history page.

Continuity of ordering part numbers
Infineon continues to support existing part numbers. Please continue to use the ordering part numbers listed in the datasheet for ordering.



THIS SPEC IS OBSOLETE

Spec No: 002-05296

Spec Title: AN205296 - FM3, MB9BF506 SERIES, SPWM GENERATION

Replaced by: NONE

AN205296

FM3, MB9BF506 Series, SPWM Generation

This application note describes the principle of SPWM and generation SPWM signal with 32-bit microcontroller MB9BF506.

Contents

1 Introduction....1
1.1 Purpose....1
1.2 Definitions, Acronyms and Abbreviations....1
1.3 Document Overview....1
2 SPWM Algorithm....2
2.1 Overview....2
2.2 SPWM Algorithm....2
2.3 Harmonic Analysis of SPWM Inverter Circuit....6
3 SPWM Application....7
3.1 Application of SPWM in Single-Phase Inverter Power....7
4 Additional Information....8
Document History....9

1 Introduction

1.1 Purpose

This application note describes the principle of SPWM and generation SPWM signal with 32-bit microcontroller MB9BF506.

1.2 Definitions, Acronyms and Abbreviations

SPWM - Sinusoidal Pulse Width Modulation

1.3 Document Overview

The rest of document is organized as the following :

Chapter 2 SPWM Algorithm

Chapter 3 SPWM Application

OBSOLETE

2 SPWM Algorithm

SPWM Algorithm

2.1 Overview

PWM technology utilizes the switch of whole-control component to convert voltage into voltage pulse sequences with the same breadth and different widths, thus to realize voltage transformation, frequency conversion control and harmonic wave cancellation. According to sampling control theory, the effects of narrow pulses with the same impulse and different shapes are basically the same when applied to inertia. SPWM control technology controls the switch of semiconductor switch components based on this theory; and the output end can obtain a series of pulses with equal breadth and expected pulse width. These pulses are used to substitute the expected output waveform. When this technology is applied in inverter, it not only can control the output voltage of inverter conveniently, but also control the frequency of output voltage.

Though PWM control theory that has been raised long time ago, due to the limit in the development level of electronic component, it has not been widely applied until the rapid development of whole-control electronic components. PWM control technology develops considerably fast along with the development of electronics, semiconductor microelectronics and each control theory.

2.2 SPWM Algorithm

2.2.1 Natural Sampling

Use sinusoidal wave as the modulate wave, a high frequency triangular wave as the carrier wave, use sinusoidal wave modulate the carrier wave, the time of turn on or off switch is the natural point of intersections, we call it natural sampling, as show in Figure 1.With this manner, the obtained SPWM wave is very similar with sinusoidal wave, but the point of intersection has the random city, the center of the pulse in one cycle is not equidistant, so the equation of the pulse is exceed equations, calculate is very complexity, can't control in real-time.

Figure 1. Natural sampling

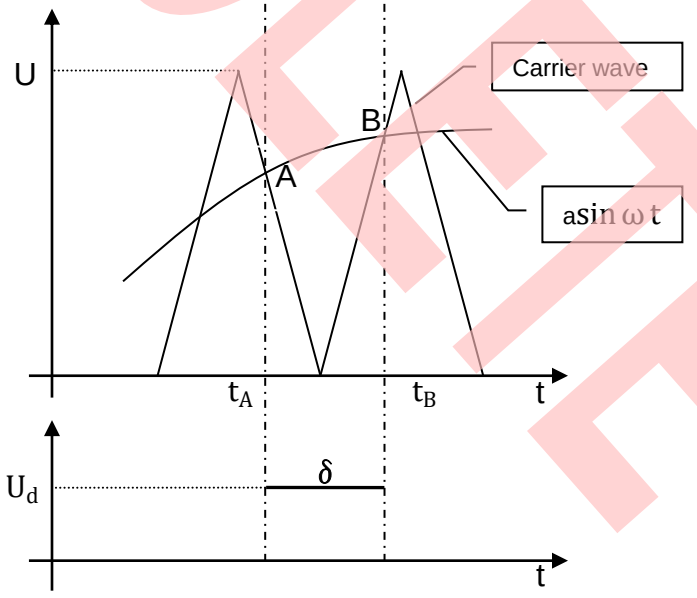

OBSOLETE

2.2.2 Symmetric Regular Sampling

Symmetrical rule sample law is the improvement of nature sample method, it is made to be parallel by the triangular wave axis of symmetry and sine wave point of intersection in the time axis straight line, this parallel lines and triangular wave two waists' points of intersection take the SPWM This method only samples in the triangular wave apex or the basic point position to the sine wave, the principle of symmetrical rule sample method as shown in Figure 2.

Figure 2. Asymmetric Regular Sampling

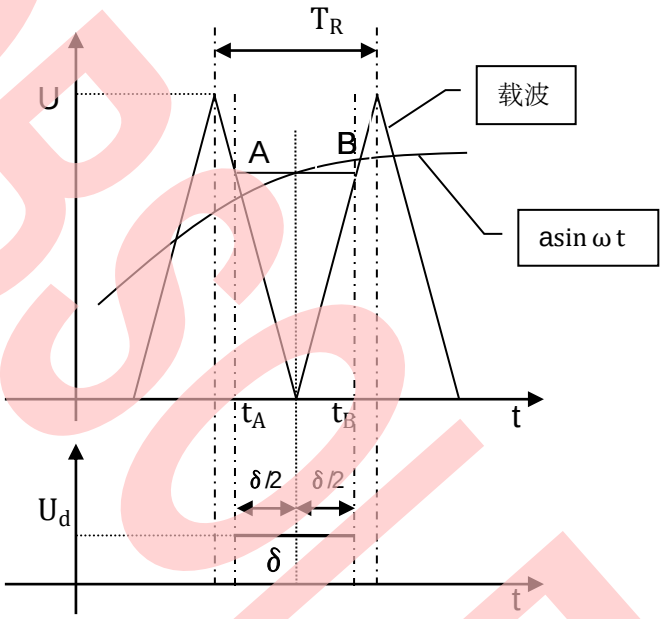

If the sinusoidal wave is a sin ω t, the amplitude of the triangular wave is set to unit amount 1, the triangular wave and sinusoidal wave shift one unit amount upward, sample the sinusoidal wave at the bottom point of the triangular wave, then, the following formula can be got based on the Similar Triangles theory:

$$\frac{1+a\sin\omega t}{\delta/2} = \frac{2}{T_R/2} \quad (1)$$

Simplify formula（1）to get the following:

$\delta = T_R(1+a\sin\omega t)/2$

In $\omega t = (k+3/4)2\pi/2$ (k=0, 1, 2…..N-1)

ω is the angular frequency of sinusoidal wave, δ is the pulse width of a certain phase enabling, and T_R is the cycle of the triangular wave. N refers to the carrier wave ratio, 2π/N refers to the amplitude corresponding to the triangular wave cycle T_R, K refers to the count of a cyclic sampling.

Because only needs to carry on a sample then in each triangle carrier cycle to be possible to obtain a switching signal, therefore simplified the formula, and may act according to the pulse width formula real-time computation the SPWM The WPWM wave and sine wave that approaching degree because forms has the big error, will thus create an error.

OBSOLETE

2.2.3 Asymmetric Regular Sampling

Elements of Asymmetric Regular Sampling method is that to be namely in the apex position sample of triangular wave, and in the basic point position sample of triangular wave, hands over the triangular wave and A, B two spots along the time axis extension with the sine wave point of intersection, both samples to the sine wave in a triangle wave period two. As shown in Figure 3 is the start time and shutoff time of high level pulse.

Figure 3. Asymmetric Regular Sampling method.

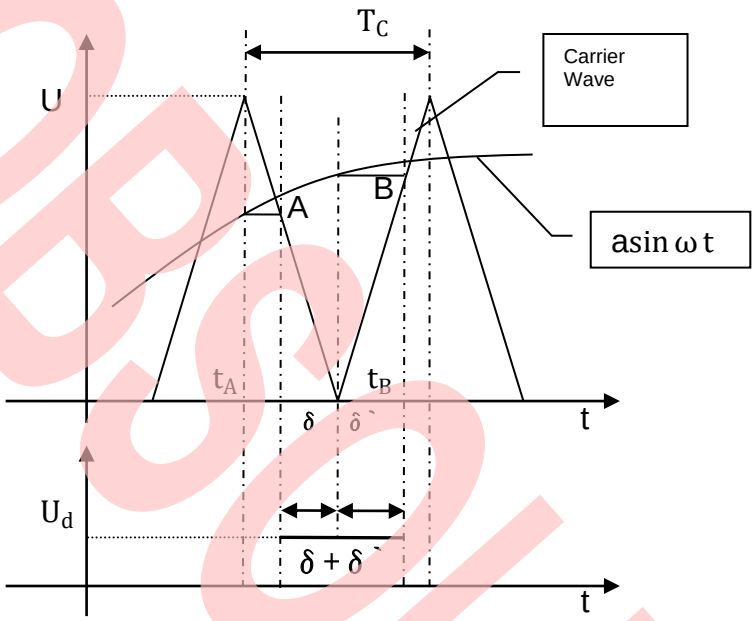

Set the amplitude of triangular carrier wave to unit amount 1, the amplitude of sinusoidal modulation wave to a, the triangular carrier wave and sinusoidal wave shift one unit amount upward, as shown in Figure 3. The following formula can be got based on the Similar Triangles theory:

$$\frac{\delta}{T_C/2} = \frac{1 + a\sin\omega t_A}{2}$$

$$\frac{\delta'}{T_C/2} = \frac{1 + a\sin\omega t_B}{2}$$

Simplified as: $\delta = \frac{T_C(1+a\ \sin\omega t_A)}{4}$

$$\delta' = \frac{T_C(1+a\sin\omega t_B)}{4}$$

Inferred from the above, the SPWM pulse width is:

$$\delta+\delta` = \frac{T_C}{2}[1 + \frac{a}{2}(\sin\omega t_A + \sin\omega t_B)]$$

If the carrier wave ratio(the ratio between the triangular wave (carrier wave)frequency and sinusoidal wave (modulation wave) frequency) is N, since sampling modulation wave twice in each carrier wave cycle, as a result:

$$t_A = \frac{T_C}{2}K\ \ (K = 0,2,4.....2N\text{-}2)$$

$$t_B = \frac{T_C}{2}K\ \ (K = 1,3,5.....2N\text{-}1)$$

OBSOLETE

Since $f_c/f_m = N = \frac{1}{T_C f_m}$

Then: $\omega t_A = 2\pi f_m t_A = 2\pi f_m \frac{T_C}{2} K = \frac{\pi}{N} K$ (k=0,2,4...2N-2)

$\omega t_B = 2\pi f_m t_B = 2\pi f_m \frac{T_C}{2} K = \frac{\pi}{N} K$ (k=1,3,5...2N-1)

Therefore:

$\delta = \frac{T_C}{4}(1 + a \sin\frac{\pi}{N} K)$ (k=0,2,4...2N-2)

$\delta' = \frac{T_C}{4}(1 + a \sin\frac{\pi}{N} K)$ (k=1,3,5...2N-1)

The asymmetric regular sampling method samples the modulation wave at the symmetric places of the triangular carrier wave's peak and bottom, namely sampling twice in a carrier wave cycle. The similarity between the SPWM and the sinusoidal modulation wave is significantly raised compared with the symmetric rules sampling method, and the output waveform is closer to the natural sampling method. Therefore, this system adopts the asymmetric regular sampling method.

2.2.4 Unipolar Area Equivalence Method

According to an important theory in the sampling control: when the narrow pulse with equivalent impulse but different shape is added to the inertia segment, the effects are basically the same. The impulse refers to the area of the narrow pulse. Area Equivalence Method of the sinusoidal pulse width modulation uses a series of narrow pulses with the same amplitude but different width, to replace the area formed by the sinusoidal wave and time shaft in each sampling cycles. As shown in Figure 4: Divide the sinusoidal wave into N parts, the area formed by each part and the θ is replaced with the highly equivalent rectangle pulse. Combined N rectangle pulses with same amplitude and different width can be used to replace sinusoidal half wave.

Figure 4. Unipolar Area Equivalence method

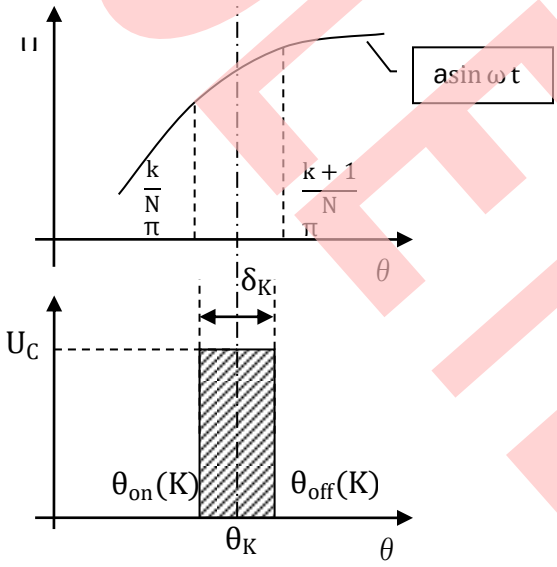

If sine wave u=a sinωt = a sin(θ),divide the positive half wave of the sine wave into N parts, each part is π/radian, the area of the K-th part is S_K,according to the area equivalence theory.

$$S_K = \delta_K U_C = a \int_{\frac{K}{N}\pi}^{\frac{K+1}{N}\pi} \sin(\theta)\, d(\theta) \quad (K=1,2,3...N)$$

If the modulation ratio is $M = \frac{a}{U_C}$,then:

$$\delta_K = M[\cos\left(\frac{k}{N}\pi\right) - \cos(\frac{K+1}{N}\pi)]$$

According to the area center equivalence theory, get the following:

$$\int_{\frac{K}{N}\pi}^{\theta_K} a\sin(\theta)\,d(\theta) = \int_{\theta_K}^{\frac{K+1}{N}\pi} a\sin(\theta)\,d(\theta)$$

The center of the pulse is: $\theta_K = \arccos\left\{\frac{1}{2}[\cos\left(\frac{k}{N}\pi\right) - \cos(\frac{k+1}{N}\pi)]\right\}$

Therefore, the switching angle of the unipolar pulse is:

$$\begin{cases} \theta_{on}(k) = \theta_k - \frac{\theta_k}{2} \ (k=1,2,3...N) \\ \theta_{on}(k) = \theta_k + \frac{\theta_k}{2} \ (k=1,2,3...N) \end{cases}$$

2.3 Harmonic Analysis of SPWM Inverter Circuit

The harmonic component size of the inverter output voltage and output current is the important indicator for measuring the inverter performance. The higher harmonic output by the inverter will increase the loss of inductive load, reduce the factor of efficiency and power, severely interfere with electronic devices, and affect the normal running of peripheral devices. Therefore, it is necessary to analyze and control the output harmonic of the SPWM inverter.

According to the Fourier Analysis:

$$f(\delta) = \sum_{k=1,3,5,\ldots}^{N_2} Vo_k\sqrt{2}\sin K\omega t$$

$$Vo_k = \frac{4Vd_c}{\sqrt{2}K\pi}\sum_{i=1}^{} ((-1)^{i-1}\cos k\,\delta_i)$$

δ_i is the switch angle, and t_i is the switch time. $\delta_i = \omega\, t_i$

k=1,3,5,…

OBSOLETE

3 SPWM Application

Application of SPWM algorithm in MB9BF506 inverter system

3.1 Application of SPWM in Single-Phase Inverter Power

3.1.1 System topology

The single-phase full-bridge inverter circuit as shown in Figure 5, the carrier wave u_c is the high frequency triangular wave generated by the MCU, modulation wave u_m is the internal benchmark sine modulation signal of the MCU, the modulation unit generates 4-channel high-frequency switch pulse through different SPWM algorithm (asymmetric regular sampling or area equivalence method) to control the sine voltage with high-frequency component output by the full-bridge inverter. Through the smooth filter of the LC low-pass filter, eliminate the harmonic component to get pure sine wave from the load R.

Figure 5. Single-phase full-bridge inverter topology

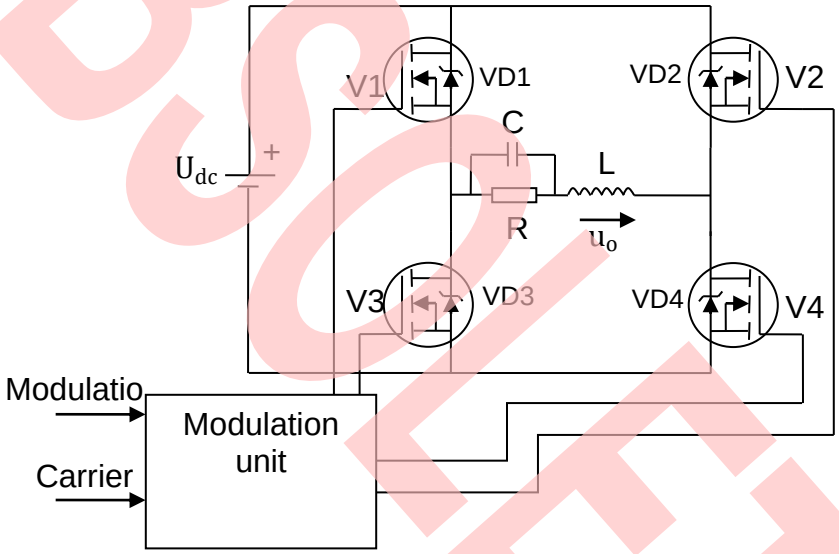

3.1.2 System algorithm

MB9BF506 is a 32-bit low-cost and high-performance micro-controller launched by Fujitsu, based on ARM Cortex-M3, providing on-chip Flash memory and SRAM. MB9BF506 contains a Multifunction Timer, which facilitates generating PWM signals of any cycle/pulse width.

For easier calculation, the system adopts symmetric regular sampling method to implement the SPWM waveform. The harmonic component of the symmetric regular sampling method is greater than that of the asymmetric regular sampling method, but if the carrier wave frequency is high enough, the effect is not severe enough.

To eliminate the even harmonic, the modulation ratio is better to be an odd integer and the multiples of three. In addition, the slopes of the triangular wave and the sine wave should have opposite polarity at the zero passage convergence. Namely, the sampling points for the modulation wave are symmetric about $\frac{\pi}{2}$ and π, as shown in Figure 6. The amplitude of the triangular wave varies between0 ~ U_R, if the amplitude modulation is M, the sine wave is expressed as:

$$U_S = (\frac{1}{2} + \frac{1}{2} M \sin\theta) U_R$$

If use the peak sampling, the enabling time of the upper bridge arm is :

$$t_{on} = \frac{1}{4} T_R (1 + M \sin\theta')$$

OBSOLETE

T_R is the cycle of the carrier wave, θ ′ is the sampling time of the triangular wave for the sine wave, θ ′ is expressed as :

$$\theta' = \left(K + \frac{3}{4}\right)\frac{2\pi}{N}$$

N is the modulation ratio, $\frac{2\pi}{N}$ is the amplitude corresponding to the carrier wave cycle of the triangular wave T_R , K is the counting value in a sine cycle, K = 1, 2, 3……N-1.

Figure 6. System Modulation Schematic

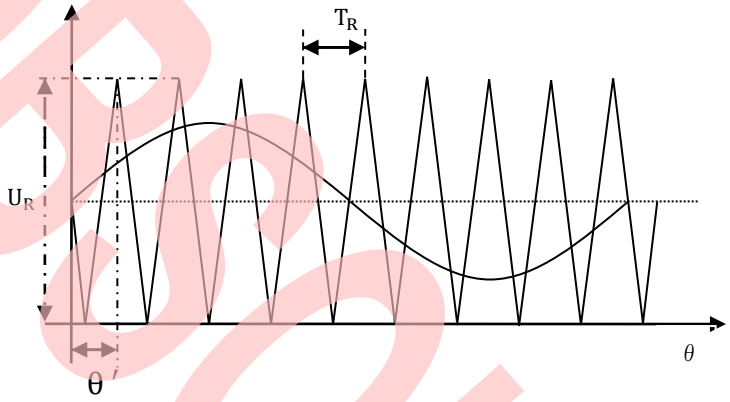

In the system, the carrier wave frequency is 30KHz, and the carrier wave ratio N=600, namely the system samples the base waves for 600 times in a sine cycle. The MCU calculates the 0 ~ 599 discrete values of the sine function $\sin\left(K + \frac{3}{4}\right)\frac{2\pi}{N}$ with the amplitude 1 of the 600 sampling values. The values are made into a table to save in the memory. The system repeatedly invokes the values in the table and loads them into the cont counter in multifunction timer of the MCU, and the SPWM waveforms are generated.

4 Additional Information

For more information about Cypress Semiconductor products, please visit the following websites:

http://www.cypress.com/cypress-microcontrollers

http://www.cypress.com/cypress-mcu-product-softwareexamples

OBSOLETE

Document History

Document Title: AN205296 - FM3, MB9BF506 Series, SPWM Generation

Document Number: 002-05296

Revision	ECN	Orig. of Change	Submission Date	Description of Change
**	-	Alan Fang	01/20/2012	0.1.0, First draft
			03/07/2012	0.2.0, Update
*A	5279145	CBZH	06/23/2016	Migrated Spansion Application Note “MCU-AN-510101-E-02” to Cypress format.
*B	5842070	AESATMP9	08/02/2017	Updated logo and copyright.
*C	6329249	SSAS	10/02/2018	Obsoleted

OBSOLETE

Worldwide Sales and Design Support

Cypress maintains a worldwide network of offices, solution centers, manufacturer's representatives, and distributors. To find the office closest to you, visit us at Cypress Locations.

Products

ARM® Cortex® Microcontrollers	cypress.com/arm
Automotive	cypress.com/automotive
Clocks & Buffers	cypress.com/clocks
Interface	cypress.com/interface
Internet of Things	cypress.com/iot
Memory	cypress.com/memory
Microcontrollers	cypress.com/mcu
PSoC	cypress.com/psoc
Power Management ICs	cypress.com/pmic
Touch Sensing	cypress.com/touch
USB Controllers	cypress.com/usb
Wireless Connectivity	cypress.com/wireless

PSoC® Solutions

PSoC 1 | PSoC 3 | PSoC 4 | PSoC 5LP | PSoC 6

Cypress Developer Community

Forums | WICED IOT Forums | Projects | Videos | Blogs | Training | Components

Technical Support

cypress.com/support

OBSOLETE

All other trademarks or registered trademarks referenced herein are the property of their respective owners.

Cypress Semiconductor
198 Champion Court
San Jose, CA 95134-1709

© Cypress Semiconductor Corporation, 2012-2018. This document is the property of Cypress Semiconductor Corporation and its subsidiaries, including Spansion LLC ("Cypress"). This document, including any software or firmware included or referenced in this document ("Software"), is owned by Cypress under the intellectual property laws and treaties of the United States and other countries worldwide. Cypress reserves all rights under such laws and treaties and does not, except as specifically stated in this paragraph, grant any license under its patents, copyrights, trademarks, or other intellectual property rights. If the Software is not accompanied by a license agreement and you do not otherwise have a written agreement with Cypress governing the use of the Software, then Cypress hereby grants you a personal, non-exclusive, nontransferable license (without the right to sublicense) (1) under its copyright rights in the Software (a) for Software provided in source code form, to modify and reproduce the Software solely for use with Cypress hardware products, only internally within your organization, and (b) to distribute the Software in binary code form externally to end users (either directly or indirectly through resellers and distributors), solely for use on Cypress hardware product units, and (2) under those claims of Cypress's patents that are infringed by the Software (as provided by Cypress, unmodified) to make, use, distribute, and import the Software solely for use with Cypress hardware products. Any other use, reproduction, modification, translation, or compilation of the Software is prohibited.

TO THE EXTENT PERMITTED BY APPLICABLE LAW, CYPRESS MAKES NO WARRANTY OF ANY KIND, EXPRESS OR IMPLIED, WITH REGARD TO THIS DOCUMENT OR ANY SOFTWARE OR ACCOMPANYING HARDWARE, INCLUDING, BUT NOT LIMITED TO, THE IMPLIED WARRANTIES OF MERCHANTABILITY AND FITNESS FOR A PARTICULAR PURPOSE. To the extent permitted by applicable law, Cypress reserves the right to make changes to this document without further notice. Cypress does not assume any liability arising out of the application or use of any product or circuit described in this document. Any information provided in this document, including any sample design information or programming code, is provided only for reference purposes. It is the responsibility of the user of this document to properly design, program, and test the functionality and safety of any application made of this information and any resulting product. Cypress products are not designed, intended, or authorized for use as critical components in systems designed or intended for the operation of weapons, weapons systems, nuclear installations, life-support devices or systems, other medical devices or systems (including resuscitation equipment and surgical implants), pollution control or hazardous substances management, or other uses where the failure of the device or system could cause personal injury, death, or property damage ("Unintended Uses"). A critical component is any component of a device or system whose failure to perform can be reasonably expected to cause the failure of the device or system, or to affect its safety or effectiveness. Cypress is not liable, in whole or in part, and you shall and hereby do release Cypress from any claim, damage, or other liability arising from or related to all Unintended Uses of Cypress products. You shall indemnify and hold Cypress harmless from and against all claims, costs, damages, and other liabilities, including claims for personal injury or death, arising from or related to any Unintended Uses of Cypress products.

Cypress, the Cypress logo, Spansion, the Spansion logo, and combinations thereof, WICED, PSoC, CapSense, EZ-USB, F-RAM, and Traveo are trademarks or registered trademarks of Cypress in the United States and other countries. For a more complete list of Cypress trademarks, visit cypress.com. Other names and brands may be claimed as property of their respective owners.