The following document contains information on Cypress products. The document has the series name, product name, and ordering part numbering with the prefix “MB”. However, Cypress will offer these products to new and existing customers with the series name, product name, and ordering part number with the prefix “CY”.

How to Check the Ordering Part Number

1. Go to www.cypress.com/pcn.
2. Enter the keyword (for example, ordering part number) in the **SEARCH PCNS** field and click **Apply**.
3. Click the corresponding title from the search results.
4. Download the Affected Parts List file, which has details of all changes

For More Information

Please contact your local sales office for additional information about Cypress products and solutions.

About Cypress

Cypress is the leader in advanced embedded system solutions for the world's most innovative automotive, industrial, smart home appliances, consumer electronics and medical products. Cypress' microcontrollers, analog ICs, wireless and USB-based connectivity solutions and reliable, high-performance memories help engineers design differentiated products and get them to market first. Cypress is committed to providing customers with the best support and development resources on the planet enabling them to disrupt markets by creating new product categories in record time. To learn more, go to www.cypress.com.

AN205262

FR, MB91460, I/O Ports

The I/O-port functionality is the simplest peripheral function of FR microcontroller. Nevertheless, some details should be considered while programming. This application note reflects the functionality and describes the different modes.

Contents

1 Introduction 1
1.1 Key features 1
2 The I/O-port 1
2.1 Block Diagram 1
2.2 Registers 3
2.3 Input Mode 5
2.4 Configuring Pull-up or Pull-down resistor 6
2.5 Output-mode 7
3 Port Input / Unused Pins 7
3.1 Port Input / Unused Pins 7
4 Technical information 8
4.1 Hysteresis Inputs 8
5 Using the same I/O port simultaneously as in- and output 9
6 Tips and Tricks 11
6.1 Initial Value 11
6.2 Bit Instructions 11
6.3 RMW Instructions 11
7 Additional Information 11
Document History 12

1 Introduction

The I/O-port functionality is the simplest peripheral function of FR microcontroller. Nevertheless, some details should be considered while programming. This application note reflects the functionality and describes the different modes.

Please note that in this document each port number is given with the 2-digit placeholder "*xy*". "*z*" always means the bit position 0 – 7.

Example: "PDR02_D3" means Port 02 Bit 3.

1.1 Key features

- Port direction settable
- Global port enable for port inputs
- Usage of I/O Port or Resource Pin 1/2, both states readable
- Input can be disabled, if corresponding pin is unused
- Internal pull-up/pull-down resistor can be enabled
- Input level can be set to CMOS Hysteresis A (0307), CMOS Hysteresis B (0208), Automotive Hysteresis and TTL
- Output drive strength can be set
- In STOP-HIZ state all pins are switched to input high impedance state

2 The I/O-port

Basic functionality of the I/O ports

2.1 Block Diagram

Figure 2-1 shows the internal block diagram of an external I/O-pin.

Up to 8 I/O-pins may be encapsulated into one port and one register set. The registers are described below.

Figure 2-1. I/O-port block diagram

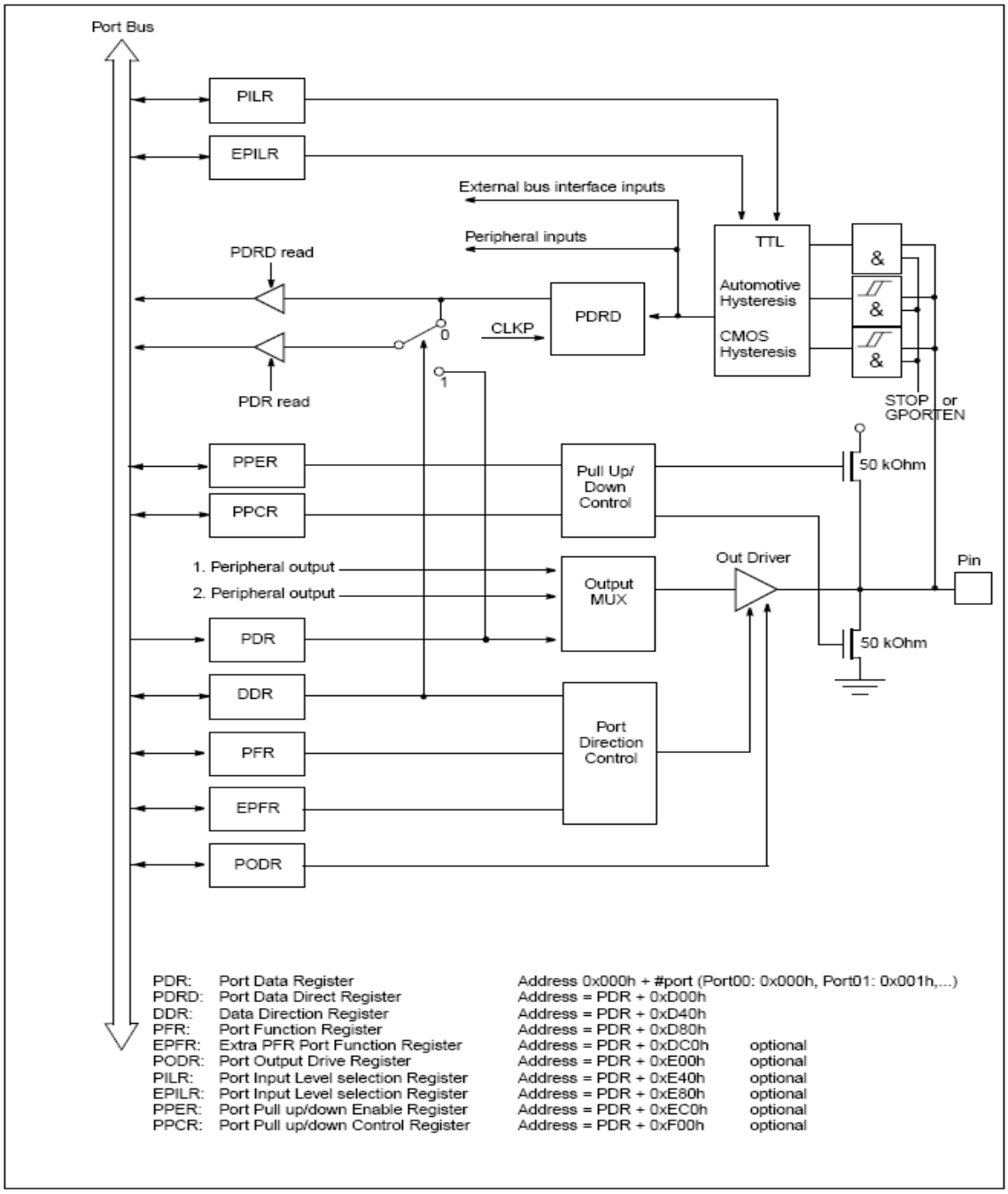

2.2 Registers

2.2.1 Port Input Enable (PORTEN)

This registers globally enable the inputs.

Table 2-1. Porten

Bit No.	Name	Explanation	Initial Value	Value	Operation
7-2	–	*Undefined*	X	0	*Reserved Bit , always write "0" to it*
1	CPORTEN	Bootloader Communication Port Enable	0	0	Inputs of bootloader communication ports are disabled
				1	Inputs of bootloader communication ports are enabled
0	GPORTEN	General Port Enable	0	0	Inputs of all ports are disabled
				1	Inputs of all ports are enabled

2.2.2 Port Data Register (PDR)

This register contains the data bits, if the corresponding port acts as a simple digital output. The contents are output, if the Port Direction Register is set to output mode.

Please note that a resource output control bit overwrites the PDR bit value.

Table 2-2. PDR

PDRxy_Dz	Pin Function
0	Pin State Low (V_{SS})
1	Pin State High (V_{DD})

The read value of PDR register depends on the following:

- The corresponding bit in DDR and PFR register
- The type of instruction used (Read/Read-modify-write)

The following table describes the above discussed behaviour:

Table 2-3. Reading PDR

PFR Value	DDR Value	PDR		
		Write	Read	Read-modify-write
0	0 (Input)	Writes the PDR setting value, has no effect on the pin value	Reads the sampled pin data	Always writes the PDR setting value
0	1 (Output)	Writes the PDR setting value to the corresponding external pins	Reads the PDR register value	Always writes the PDR setting value

2.2.3 Data Direction Register (DDR)

This register contains the bit information of the corresponding pins if they should act as input or output.

Table 2-4. DDR

DDRxy_Dz	Pin Function
0	Port Input
1	Port Output

2.2.4 Port Data Register Direct Read (PDRD)

This register samples the pin data with CLKP. It is read-only.

2.2.5 (Extra) Port Input Level Register (PILR, EPILR)

The input levels of each port can be programmed bit-wise using `PILR` and `EPILR` registers.

Table 2-5. PILR, EPILR

PILRxy_Dz	EPILRxy_Dz	Input Level	V_{IL}	V_{IH}
0	0	CMOS Hysteresis A (0307)	0.3 V_{DD}	0.7 V_{DD}
1	0	Automotive Hysteresis	0.5 V_{DD}	0.8 V_{DD}
0	1	TTL	0.8 V	2.1 V
1	1	CMOS Hysteresis B (0208)	0.2 V_{DD}	0.8 V_{DD}

2.2.6 Port Output Drive Register (PODR)

With these registers the strength of the output current of a pin can be adjusted to improve the EMI behaviour. This setting does not limit the output drive to the given values. The output must not exceed these values to guarantee the specified Output levels. See also Datasheet of MB91F46x series.

Table 2-6. PODR

PODRxy_Dz	Output Current
0	5 mA output drive
1	2 mA output drive

2.2.7 Port Pull-up/Pull-down Enable and Control Register (PPER, PPCR)

These registers enable and connect an internal pull-up or pull-down resistor to a port pin.

Table 2-7. PPER, PPCR

PPERxy_Dz	PPCRxy_Dz	Pull-Up Resistor
0	x	Pull-up/ Pull-down Disabled
1	0	Pull-down is selected
1	1	Pull-up is selected

The nominal value for this pull-up resistor is 50 kΩ.

2.2.8 (Extra) Port Function Register (PFR, EPFR)

`PFR` along with `EPFR` configures the certain port as general purpose I/O or resource 1 (input/output) or resource 2 (input/output), if available. It should be noted that `PFR` is available for all the ports where as `EPFR` is available for selected ports.

The following table gives an example of this.

Table 2-8. PFR, EPFR

PFR19_D2	EPFR19_D2	Pin Function
0	X	General Purpose I/O
1	0	SCK5 input/output
1	1	CK5 input

For more details please refer the hardware manual.

2.3 Input Mode

In general, if a pin should acts as a digital input, the PORTEN register should be set to 0x03 in order to globally enable the inputs

2.3.1 Digital Port Input

The following example shows the register configuration that needs to be done on MB91460 Series, if a pin should act as a digital input:

```
PFR19_D4 = 0;      // Port 19 pin 4 as general purpose i/o
DDR19_D4 = 0;      // data direction - input
PORTEN = 0x03;     // global port input enable
```

As shown above, first the PORTEN register should be set to 0x03. Then the corresponding bit of PFR register should be set to 0 in order to configure port 19 pin 4 as general purpose i/o and finally the corresponding bit of DDR register should be set to 0.

After configuring a pin as digital port input, the level of the input pin can be determined as follows:

```
if ( 1 == PDR19_D4 )     // if pin high?
{
   // do something
}
else                     // pin low
{
   // do something
}
```

Additionally the level of the input pin can also be read out via the PDRD register (2.2.4) as follows:

```
if ( 1 == PDRD19_D4 )    // if pin high?
{
   // do something
}
else                     // pin low
{
   // do something
}
```

Optionally the input level can be set via the PILR and EPILR registers (2.2.5) as follows:

```
PILR19_D4 = 1;     // set input detection level as CMOS
hysterisis
                // B(0208)
EPILR19_D4 = 1;    //
```

If the connected external source may change to high-Z state, please use an external pull-up or –down resistor or configure the internal pull-up or pull-down resistor using PPER and PPCR (2.2.7) registers.

2.3.2 Resource Input

The following example shows the register configuration that needs to be done on MB91460 Series, if a pin should act as resource input (clock input for Free-run timer 4):

```
PFR19_D2 = 1;      // Port 19 pin 2 as resource function
EPFR19_D2 = 1;     // Port 19 pin 2 as CK4 input
PORTEN = 0x03;     // global port input enable
```

In addition too the above the ECLK bit of TCCS4 register should be set as 1 in order to select the external clock for Free-run timer 4.

Optionally the input level can be set via the PILR and EPILR registers (2.2.5), if required and also the pull-up or pull-down resistor can be configured using PPER and PPCR registers, if required.

2.4 Configuring Pull-up or Pull-down resistor

All ports while in input-mode (digital input as well as resource input) have the possibility to enable and configure an internal pull-up/pull-down resistor (about 50 kΩ) by programming the PPER and PPCR (2.2.7).

It should be noted that the PPCR can only be changed while the corresponding bit of PPER 0 i.e. pull-up/pull-down disabled. If the PPCR is written with a different value while pull-up/pull down enabled then the new PPCR setting would not be effective.

The following example code shows how to do the same:

```
   . . .

   . . .
PPER19_D4 = 0;     // disable pull-up/pull-down on port 19
pin 4
PPCR19_D4 = 0;     // configure pull-down on port 19 pin 4
PPER19_D4 = 1;     // re-enable pull-down on port 19 pin 4
PORTEN = 0x03;     // global port input enable
   . . .
```

If the port-pin is used as an output, the values of corresponding bits of these registers have no meaning and the pull-up/pull-down resistor is disabled.

Enabled pull-up resistors will be disabled while the microcontroller is in STOP-HIZ state.

2.5 Output-mode

2.5.1 Digital Port Output

The following example shows the register configuration that needs to be done on MB91460 Series, if a pin should act as a digital output:

```
PFR19_D4 = 0;      // Port 19 pin 4 as general purpose i/o
PDR19_D4 = 0;      // clear output before setting the data
direction,
                   // this is required to guarantee the initial
      value
                   // when the data direction is set as output
DDR19_D4 = 1;      // data direction - output
```

Optionally the output current strength can be set by the `PODR` register (2.2.6) as follows:

```
PODR19_D4 = 1;     // 2mA output drive
```

2.5.2 Resource Output

The following example shows the register configuration that needs to be done on MB91460 Series, if a pin should act as resource output (output for Reload Timer 7):

```
PFR15_D7 = 1;      // Port 15 pin 7 resource output
EPFR15_D7 = 1;     // Port 15 pin 7 as TOT7 output
PORTEN = 0x03;     // this configuration is required only if
the external
                   // pin status needs to be read via PDRD
```

Optionally the output current strength can be set by the `PODR` register (2.2.6).

3 Port Input / Unused Pins

How to connect Input Port Pins and how to proceed with unused Pins

3.1 Port Input / Unused Pins

It is strongly recommended not to leave the pins unconnected, while they are switched to input and are enabled (by `PORTEN` register). In this case those pins can enter a so-called *floating state*. This can cause a high I_{CC} current, which is adverse to low power modes. Also damage of the MCU may happen.

In such cases, it is highly recommended to use the internal pull-up/pull-down resistors.

4 Technical information

Electrical characteristics of the input hysteresis

4.1 Hysteresis Inputs

A hysteresis describes the behaviour of an input pin where the input level at which '1' is detected, and the level at which '0' is detected are different.

The levels are described in chapter 2.2.5.

Kindly note that the power supply current i.e. the power consumption of the device may increase, while the input voltage is within the hysteresis area, however the input current of the I/O pin remains constant.

Figure 4-1. Hysteresis

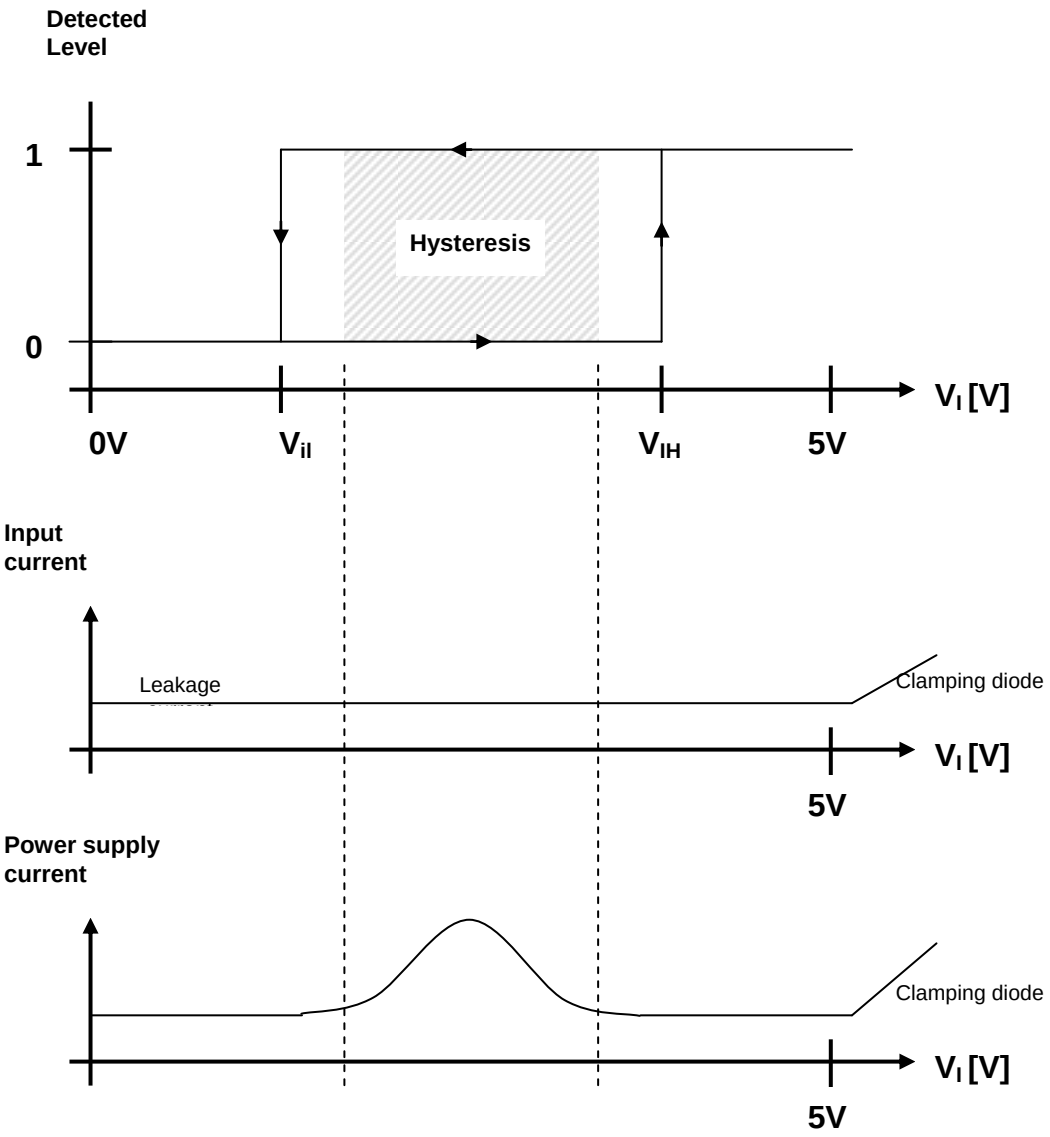

V_{IL} Port hysteresis input level (low-level) specified in the datasheet

V_{IH} Port hysteresis input level (high-level) specified in the datasheet

Real hysteresis area

5 Using the same I/O port simultaneously as in- and output

This chapter explains using one pin simultaneously as in- and output

With the circuit shown in figure 6.1, enabled internal pull-up resistor, pin state set low and some small considerations in the software it's possible to use the same port simultaneously as input and output – for polling the key button and driving a LED at the same pin.

If the port is used as output the LED is on. If the port is used as input the LED is off and the key button's status can be polled.

Figure 5-1. I/O-port example circuit

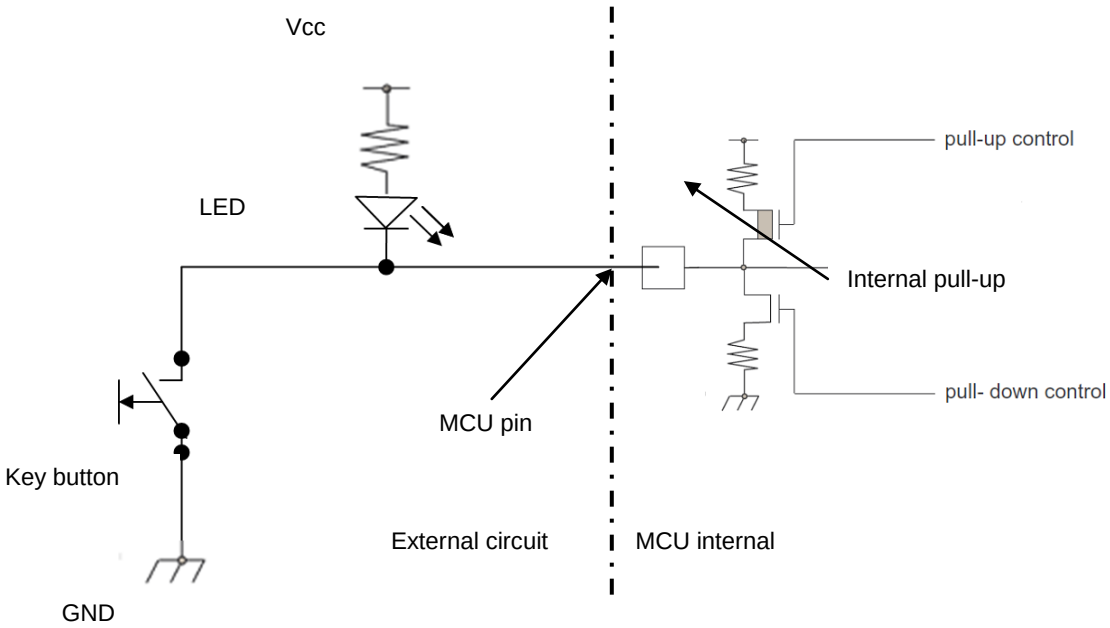

When the port direction is changed from output to input, the pin's level becomes high. The high-level is not reached immediately after the port's DDR register is set to input.

Some minor parasitic capacities (~ 30 pF) caused by chip-internal capacities and by the PCB are connected to the pin. These capacities are loaded via the internal pull-up (50 kΩ) as soon as the port is set to input. The pin reaches high-level after a typical charging time of 1 to 2 µs.

Charging time: $\tau = R * C = 50\ k\Omega * 30\ pF = 1{,}5\ us$

Polling the port within this time may return a false value. As workaround we recommend to implement a short delay loop after the port's direction is switched to input and before the port polling is started. Figure 6.2 shows a code example for using port 29 pin 0 as in- and output.

Figure 5-2. Example code

```
void KeyLED_Init(void)
{
   PFR29_D0 = 0;      /* Port 29 pin 0 as general purpose I/O */
   PDR29_D0 = 0;      /* Preset Port 29 pin 0 pin state low (never output high */
                      /* this might cause shortcircuit if switch is pressed) */

   PPER29_D0 = 0;     /* disable pull-up/pull-down on port 29 pin 0*/
   PPCR29_D0 = 1;     /* configure pull-up on port 29 pin 0*/
   PPER29_D0 = 1;     /* re-enable pull-up on port 29 pin 0*/
}


void LED_on(void)
{
   DDR29_D0 = 1;      /* Switch Port 29 pin 0 to output */
}


void LED_off(void)
{
   DDR29_D0 = 0;      /* Switch Port 29 pin 0 to input (never output high) */
}


unsigned char KeyPressed(void)
{
   if (PDR29_D0 == 0)
     return (1);      /* return '1' in case that the key button is pressed */
   else
     return (0);
}


void main(void)
{
...

   KeyLED_Init();

   LED_on();                              /* switch the LED on */
   for (delay=0; delay<500000; delay++) /* keep the LED on for some time delay */
    __asm("\tNOP");
   LED_off();                             /* switch the LED off */

   for (delay=0; delay<10; delay++)      /* short delay to get pull-up resistor */
    __asm("\tNOP");                       /* active */

     while (!KeyPressed())                 /* wait until key button is pressed */
      __asm("\tNOP");

    ...
  }
```

6 Tips and Tricks

This chapter gives some hints on using i/o ports

6.1 Initial Value

Ensure that the port-data is defined before the pin-direction is changed to output. Otherwise undefined data might be output to the I/O-pin, until PDR00 is written.

```
PDR00 = 0x00;  // define initial value before port 0 is set to output
DDR00 = 0xFF;  // set port 0 to output, after initial value is defined
```

6.2 Bit Instructions

Use byte-instructions which will be executed faster instead of using bit instructions since all bit instructions are essentially read-modify-write instructions.

6.3 RMW Instructions

Accessing to the PDR register (2.2.2) via a read-modify-write instruction always returns the contents of the register itself during read cycle (of the same read-modify-write instruction) regardless of the DDR register setting.

7 Additional Information

Information about CYPRESS Microcontrollers can be found on the following Internet page:

http://www.cypress.com/cypress-microcontrollers

The software example related to this application note is:

91460_io

It can be found on the following Internet page:

http://www.cypress.com/cypress-mcu-product-softwareexamples

Document History

Document Title: AN205262 - FR, MB91460, I/ O Ports

Document Number:002-05262

Revision	ECN	Orig. of Change	Submission Date	Description of Change
**	-	NOFL	01/25/2008	V1.0, First release, MPi
			03/20/2008	V1.1, MSt some typos corrected
			04/24/2008	V1.2, Type in Title page corrected, MSt
			09/27/2009	V1.3, Added chapter “Using the same IO-port…” MHz
*A	5084113	NOFL	01/16/2016	Converted Spansion Application Note “MCU-AN-381007-E-V13” to Cypress format
*B	5844511	AESATP12	08/04/2017	Updated logo and copyright.

Worldwide Sales and Design Support

Cypress maintains a worldwide network of offices, solution centers, manufacturer's representatives, and distributors. To find the office closest to you, visit us at Cypress Locations.

Products

ARM® Cortex® Microcontrollers	cypress.com/arm
Automotive	cypress.com/automotive
Clocks & Buffers	cypress.com/clocks
Interface	cypress.com/interface
Internet of Things	cypress.com/iot
Memory	cypress.com/memory
Microcontrollers	cypress.com/mcu
PSoC	cypress.com/psoc
Power Management ICs	cypress.com/pmic
Touch Sensing	cypress.com/touch
USB Controllers	cypress.com/usb
Wireless Connectivity	cypress.com/wireless

PSoC® Solutions

PSoC 1 | PSoC 3 | PSoC 4 | PSoC 5LP | PSoC 6

Cypress Developer Community

Forums | WICED IOT Forums | Projects | Videos | Blogs | Training | Components

Technical Support

cypress.com/support

All other trademarks or registered trademarks referenced herein are the property of their respective owners.

Cypress Semiconductor
198 Champion Court
San Jose, CA 95134-1709

© Cypress Semiconductor Corporation, 2008-2017. This document is the property of Cypress Semiconductor Corporation and its subsidiaries, including Spansion LLC ("Cypress"). This document, including any software or firmware included or referenced in this document ("Software"), is owned by Cypress under the intellectual property laws and treaties of the United States and other countries worldwide. Cypress reserves all rights under such laws and treaties and does not, except as specifically stated in this paragraph, grant any license under its patents, copyrights, trademarks, or other intellectual property rights. If the Software is not accompanied by a license agreement and you do not otherwise have a written agreement with Cypress governing the use of the Software, then Cypress hereby grants you a personal, non-exclusive, nontransferable license (without the right to sublicense) (1) under its copyright rights in the Software (a) for Software provided in source code form, to modify and reproduce the Software solely for use with Cypress hardware products, only internally within your organization, and (b) to distribute the Software in binary code form externally to end users (either directly or indirectly through resellers and distributors), solely for use on Cypress hardware product units, and (2) under those claims of Cypress's patents that are infringed by the Software (as provided by Cypress, unmodified) to make, use, distribute, and import the Software solely for use with Cypress hardware products. Any other use, reproduction, modification, translation, or compilation of the Software is prohibited.

TO THE EXTENT PERMITTED BY APPLICABLE LAW, CYPRESS MAKES NO WARRANTY OF ANY KIND, EXPRESS OR IMPLIED, WITH REGARD TO THIS DOCUMENT OR ANY SOFTWARE OR ACCOMPANYING HARDWARE, INCLUDING, BUT NOT LIMITED TO, THE IMPLIED WARRANTIES OF MERCHANTABILITY AND FITNESS FOR A PARTICULAR PURPOSE. To the extent permitted by applicable law, Cypress reserves the right to make changes to this document without further notice. Cypress does not assume any liability arising out of the application or use of any product or circuit described in this document. Any information provided in this document, including any sample design information or programming code, is provided only for reference purposes. It is the responsibility of the user of this document to properly design, program, and test the functionality and safety of any application made of this information and any resulting product. Cypress products are not designed, intended, or authorized for use as critical components in systems designed or intended for the operation of weapons, weapons systems, nuclear installations, life-support devices or systems, other medical devices or systems (including resuscitation equipment and surgical implants), pollution control or hazardous substances management, or other uses where the failure of the device or system could cause personal injury, death, or property damage ("Unintended Uses"). A critical component is any component of a device or system whose failure to perform can be reasonably expected to cause the failure of the device or system, or to affect its safety or effectiveness. Cypress is not liable, in whole or in part, and you shall and hereby do release Cypress from any claim, damage, or other liability arising from or related to all Unintended Uses of Cypress products. You shall indemnify and hold Cypress harmless from and against all claims, costs, damages, and other liabilities, including claims for personal injury or death, arising from or related to any Unintended Uses of Cypress products.

Cypress, the Cypress logo, Spansion, the Spansion logo, and combinations thereof, WICED, PSoC, CapSense, EZ-USB, F-RAM, and Traveo are trademarks or registered trademarks of Cypress in the United States and other countries. For a more complete list of Cypress trademarks, visit cypress.com. Other names and brands may be claimed as property of their respective owners.