The following document contains information on Cypress products. The document has the series name, product name, and ordering part numbering with the prefix “MB”. However, Cypress will offer these products to new and existing customers with the series name, product name, and ordering part number with the prefix “CY”.

How to Check the Ordering Part Number

1. Go to www.cypress.com/pcn.
2. Enter the keyword (for example, ordering part number) in the **SEARCH PCNS** field and click **Apply**.
3. Click the corresponding title from the search results.
4. Download the Affected Parts List file, which has details of all changes

For More Information

Please contact your local sales office for additional information about Cypress products and solutions.

About Cypress

Cypress is the leader in advanced embedded system solutions for the world's most innovative automotive, industrial, smart home appliances, consumer electronics and medical products. Cypress' microcontrollers, analog ICs, wireless and USB-based connectivity solutions and reliable, high-performance memories help engineers design differentiated products and get them to market first. Cypress is committed to providing customers with the best support and development resources on the planet enabling them to disrupt markets by creating new product categories in record time. To learn more, go to www.cypress.com.

AN205211

FR Family MB91460 Series Voltage Supply

This application note describes how to provide power supply voltages to the different voltage supply domains of MB91460 Series MCUs and also covering the constraints which have to be taken into account for the different voltage supply domains.

1 Introduction

High flexibility to adapt MCUs to different voltage supply schemes in a variety of applications is a customer demand. To meet this requirement MB91460 Series MCUs provide a number of separate voltage supply domains.

This Application Note describes how to provide power supply voltages to the different voltage supply domains of MB91460 Series MCUs. The Application note is also covering the constraints which have to be taken into account for the different voltage supply domains.

1.1 Voltage Domain Overview

Digital Supply Voltage VDD (Reference Voltage VSS):

This voltage is used for power supply of digital IO Ports on MB91460 MCUs like IO-Ports (except the IO-Ports shared with the External Bus Interface, the Stepper Motor Controller Ports).

The operation range of VDD5 is within a range of 3.0V up to 5.5V to flexibly adjust the MCU to the voltage level demands of the application.

High Current Supply Voltage HVDD (Reference Voltage HVSS):

Power Supply for the IO-Ports which may be used for Stepper Motor Control. These Ports are able to provide currents of up to +/-30mA. When the Stepper Motor Control feature is not supported by a specific MB91460 Series MCU the HVDD voltage supply domain is omitted.

The operation range of HVDD is within a range of 3.0V up to VDD (max. 5.5V) or 0V. 0V is used to switch off the stepper motor power supply in phases when stepper motors are not used to reduce the power consumption of the application.

There are type specific constraints on HVDD depending on VDD. For details on the constraints please refer to paragraph 2.2 of this application note.

External Bus Interface Supply Voltage VDD35 (Reference Voltage VSS):

Power Supply for the IO-Ports which may be used for External Bus Interface. On MB91460 Series MCUs not supporting External Bus Interface the VDD35 voltage supply domain is omitted.

Even when using the MB91460 MCU 5V environment it might be necessary to connect a device to the External Bus Interface which is only able to cope with voltages of 3.3V (for example some external FLASH memories). To adapt to this situation VDD35 can be chosen within a range of 3.0V up to VDD5 (max. 5.5V). It is possible to choose VDD35 = 0V if neither the External Bus Interface nor the corresponding GPIO ports are used by the application.

For details on the constraints on VDD35 please refer to paragraph 2.3 of this application note.

1.2 Other Voltages

There are some more voltages used on MB91460 Series MCUs which have to be taken into account when planning the voltage supply scheme of an application. These voltages are:

Core Voltage Regulator Supply VDD5R (Reference Voltage VSS):

Voltage Supply for the internal CPU Core Voltage Regulator. The operation range for VDD5R is 3.0V up to VDD (max. 5.5V).

Analogue Voltage Supply AVCC (Reference Voltage AVSS):

Power supply for the analogue parts of the MB91460 Series MCUs like analogue part of AD-Converter and Alarm Comparators.

AD-Converter Reference Voltages AVRH and AVRL (Reference Voltage AVSS):

Reference voltages for AD-Converter.

2 Constraints on the Supply Voltages

In the following the constraints caused by interlinks between the different supply voltage domains are listed.

Check the MB91460 Series Hardware Manual and the Datasheets of the corresponding MB91460 Series MCUs for details on the power supply voltage constraints and keep the absolute maximum ratings for the voltages in mind.

2.1 VDD

Choose VDD with in a range of 3.0V up to 5.5V (VSS = 0V)

2.2 HVDD

On MB91467D: HVDD = VDD or HVDD = 0V (HVSS = 0V).

Other devices: HVDD = VDD or HVDD = 0V (HVSS = 0V), condition HVDD ≤ VDD to be defined.

When HVDD is switched off (HVDD = 0V) it has to be assured that HVDD is correctly terminated and is not floating.

2.3 VDD35

Choose VDD35 with in a range of 3.0V up to 5.5V or 0V. Always keep VDD35 ≤ VDD.

When VDD35 is switched off (VDD35 = 0V) it has to be assured that VDD35 is correctly terminated and is not floating.

2.4 AVCC

Always keep VDD + 0.3V ≥ AVCC ≥ VDD - 0.3V.

An exception is possible if all GPIO ports with analogue input function (AD-Converter input ports, Alarm Comparator input port) are set to input function and all voltages input to these ports are kept below AVCC then AVCC can be chosen to AVCC ≤ VDD and AVCC ≤ HVDD. In this case none of the above ports is allowed to be set as output with high-level. Keep in mind that some of the Stepper Motor Control Ports of the HVDD voltage domain are shared with AD-Converter inputs.

2.5 AD-Converter Reference Voltages AVRH, AVRL and Input Voltages V_{IA}

AVCC ≥ AVRH ≥ 0.75 * AVCC

0.25 * AVCC ≥ AVRL ≥ AVSS

AD-Converter Input Voltage AVRH ≥ V_{IA} ≥ AVRL

2.6 Digital Input Voltages V_{ID}

VDD domain: VSS ≤ V_{ID} ≤ VDD

VDD35 domain: VSS ≤ V_{ID} ≤ VDD35

HVDD domain: VSS ≤ V_{ID} ≤ HVDD

3 Example Power Supply Schemes

In the following some proposals for standard voltage supply schemes are given.

3.1 Standard Scheme (all same supply voltage):

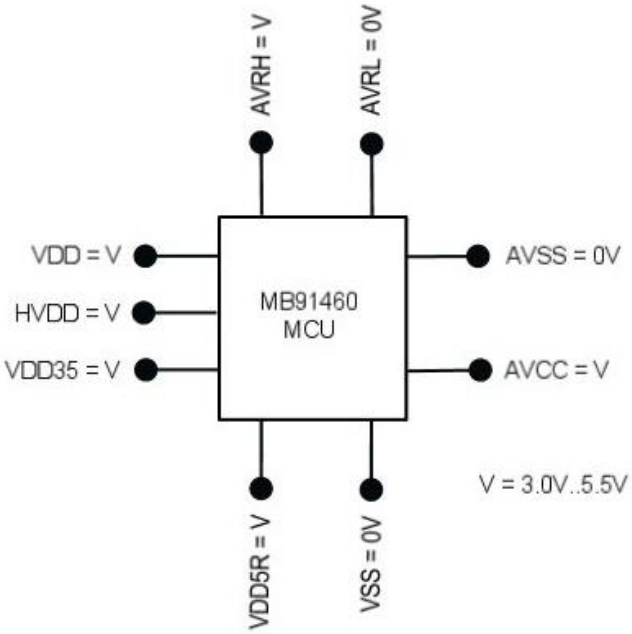

3.2 Scheme for 3.3V External Bus and Standard 5V IOs

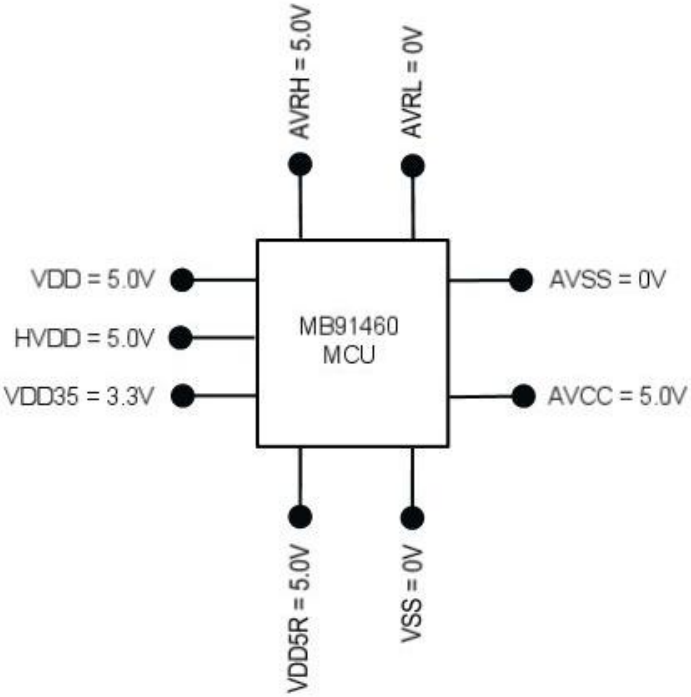

3.3 Scheme for Core Regulator Voltage 3.3V (Low Power Consumption)

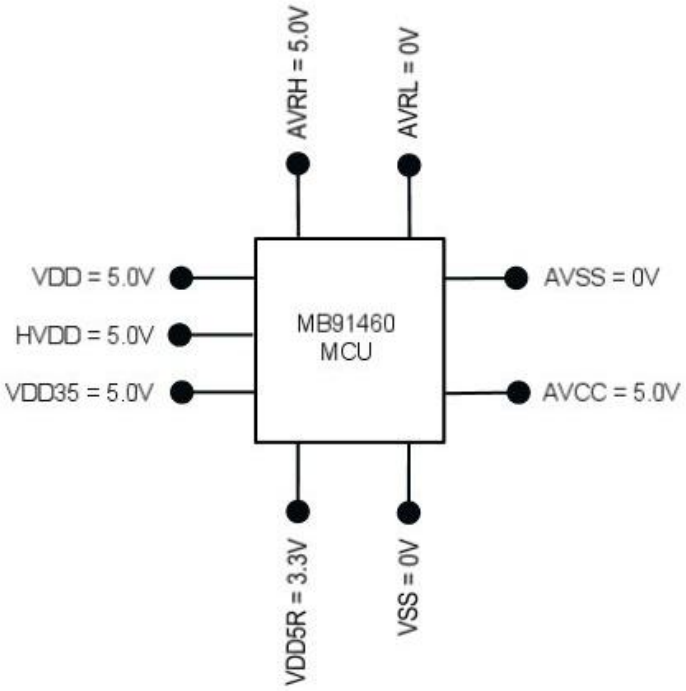

4 Power-On Sequence

In the following the recommended sequence for switching on the different supply voltages is described.

1. VDD5, VDD5R
2. VDD35, HVDD
3. AVCC, AVRH

5 Document History

Document Title: AN205211 - FR Family MB91460 Series Voltage Supply

Document Number: 002-05211

Revision	ECN	Orig. of Change	Submission Date	Description of Change
**	-	NOFL	10/10/2006	Initial release
*A	5125038	NOFL	02/04/2016	Migrated Spansion Application Note from MCU-AN-300036-E-V10 to Cypress format
*B	5840795	AESATP12	08/01/2017	Updated logo and copyright.

Worldwide Sales and Design Support

Cypress maintains a worldwide network of offices, solution centers, manufacturer's representatives, and distributors. To find the office closest to you, visit us at Cypress Locations.

Products

ARM® Cortex® Microcontrollers	cypress.com/arm
Automotive	cypress.com/automotive
Clocks & Buffers	cypress.com/clocks
Interface	cypress.com/interface
Internet of Things	cypress.com/iot
Memory	cypress.com/memory
Microcontrollers	cypress.com/mcu
PSoC	cypress.com/psoc
Power Management ICs	cypress.com/pmic
Touch Sensing	cypress.com/touch
USB Controllers	cypress.com/usb
Wireless Connectivity	cypress.com/wireless

PSoC® Solutions

PSoC 1 | PSoC 3 | PSoC 4 | PSoC 5LP | PSoC 6

Cypress Developer Community

Forums | WICED IOT Forums | Projects | Videos | Blogs | Training | Components

Technical Support

cypress.com/support

All other trademarks or registered trademarks referenced herein are the property of their respective owners.

Cypress Semiconductor
198 Champion Court
San Jose, CA 95134-1709

© Cypress Semiconductor Corporation, 2006-2017. This document is the property of Cypress Semiconductor Corporation and its subsidiaries, including Spansion LLC ("Cypress"). This document, including any software or firmware included or referenced in this document ("Software"), is owned by Cypress under the intellectual property laws and treaties of the United States and other countries worldwide. Cypress reserves all rights under such laws and treaties and does not, except as specifically stated in this paragraph, grant any license under its patents, copyrights, trademarks, or other intellectual property rights. If the Software is not accompanied by a license agreement and you do not otherwise have a written agreement with Cypress governing the use of the Software, then Cypress hereby grants you a personal, non-exclusive, nontransferable license (without the right to sublicense) (1) under its copyright rights in the Software (a) for Software provided in source code form, to modify and reproduce the Software solely for use with Cypress hardware products, only internally within your organization, and (b) to distribute the Software in binary code form externally to end users (either directly or indirectly through resellers and distributors), solely for use on Cypress hardware product units, and (2) under those claims of Cypress's patents that are infringed by the Software (as provided by Cypress, unmodified) to make, use, distribute, and import the Software solely for use with Cypress hardware products. Any other use, reproduction, modification, translation, or compilation of the Software is prohibited.

TO THE EXTENT PERMITTED BY APPLICABLE LAW, CYPRESS MAKES NO WARRANTY OF ANY KIND, EXPRESS OR IMPLIED, WITH REGARD TO THIS DOCUMENT OR ANY SOFTWARE OR ACCOMPANYING HARDWARE, INCLUDING, BUT NOT LIMITED TO, THE IMPLIED WARRANTIES OF MERCHANTABILITY AND FITNESS FOR A PARTICULAR PURPOSE. To the extent permitted by applicable law, Cypress reserves the right to make changes to this document without further notice. Cypress does not assume any liability arising out of the application or use of any product or circuit described in this document. Any information provided in this document, including any sample design information or programming code, is provided only for reference purposes. It is the responsibility of the user of this document to properly design, program, and test the functionality and safety of any application made of this information and any resulting product. Cypress products are not designed, intended, or authorized for use as critical components in systems designed or intended for the operation of weapons, weapons systems, nuclear installations, life-support devices or systems, other medical devices or systems (including resuscitation equipment and surgical implants), pollution control or hazardous substances management, or other uses where the failure of the device or system could cause personal injury, death, or property damage ("Unintended Uses"). A critical component is any component of a device or system whose failure to perform can be reasonably expected to cause the failure of the device or system, or to affect its safety or effectiveness. Cypress is not liable, in whole or in part, and you shall and hereby do release Cypress from any claim, damage, or other liability arising from or related to all Unintended Uses of Cypress products. You shall indemnify and hold Cypress harmless from and against all claims, costs, damages, and other liabilities, including claims for personal injury or death, arising from or related to any Unintended Uses of Cypress products.

Cypress, the Cypress logo, Spansion, the Spansion logo, and combinations thereof, WICED, PSoC, CapSense, EZ-USB, F-RAM, and Traveo are trademarks or registered trademarks of Cypress in the United States and other countries. For a more complete list of Cypress trademarks, visit cypress.com. Other names and brands may be claimed as property of their respective owners.