Please note that Cypress is an Infineon Technologies Company.
The document following this cover page is marked as “Cypress” document as this is the company that originally developed the product. Please note that Infineon will continue to offer the product to new and existing customers as part of the Infineon product portfolio.

Continuity of document content
The fact that Infineon offers the following product as part of the Infineon product portfolio does not lead to any changes to this document. Future revisions will occur when appropriate, and any changes will be set out on the document history page.

Continuity of ordering part numbers
Infineon continues to support existing part numbers. Please continue to use the ordering part numbers listed in the datasheet for ordering.

THIS SPEC IS OBSOLETE

Spec No: 002-05175

Spec Title: AN205175 - F2MC-8FX Family, MB95410H/470H Series One Phase Power Meter energy measure chip-RN8209

Replaced by: None

AN205175

F²MC-8FX Family, MB95410H/470H Series One Phase Power Meter energy measure chip-RN8209

This application note describes how to use One Phase Power Meter (RN8209) solution's energy measure chip-RN8209.

Contents

1 Introduction 1
2 Background 1
2.1 Overview 1
2.2 Features of RN8209 1
2.3 Function diagram 2
3 HW Diagram 2
3.1 The HW diagram of energy measure 2
4 HW Reference SCH 3
5 FW diagram 5
5.1 SPI Frame Format 5
5.2 SPI Communication Process 5
5.3 Firmware System Diagram 6
6 FW Function List 7
6.1 API 7
6.2 HAL 8
7 Additional Information 9
8 Document History 10

OBSOLETE

1 Introduction

This application note describes how to use One Phase Power Meter (RN8209) solution's energy measure chip-RN8209.

Chapter 2 explains the background of RN8209.

Chapter 3 explains the HW diagram of energy measure function.

Chapter 4 explains the HW reference SCH.

Chapter 5 explains the FW diagram.

Chapter 6 explains the FW function list.

2 Background

Background of RN8209

2.1 Overview

RN8209 can measure active power, inactive power, active energy, inactive energy, and can also provide 2 channels of individual active power and current RMS, voltage RMS, and so on. RN8209 can realize the solution to prevent the theft of power.

RN8209 support the gain calibration, phase calibration and offset calibration.

2.2 Features of RN8209

- Measure
- Software calibration
- SPI/RSIO communication
- Power watch function
- VCC-+5v, power consume-32mw
- Internal reference voltage-2.5v±3%, the type value of temperature parameter-25ppm/℃

2.3 Function diagram

Figure 1. The Function Diagram of RN8209

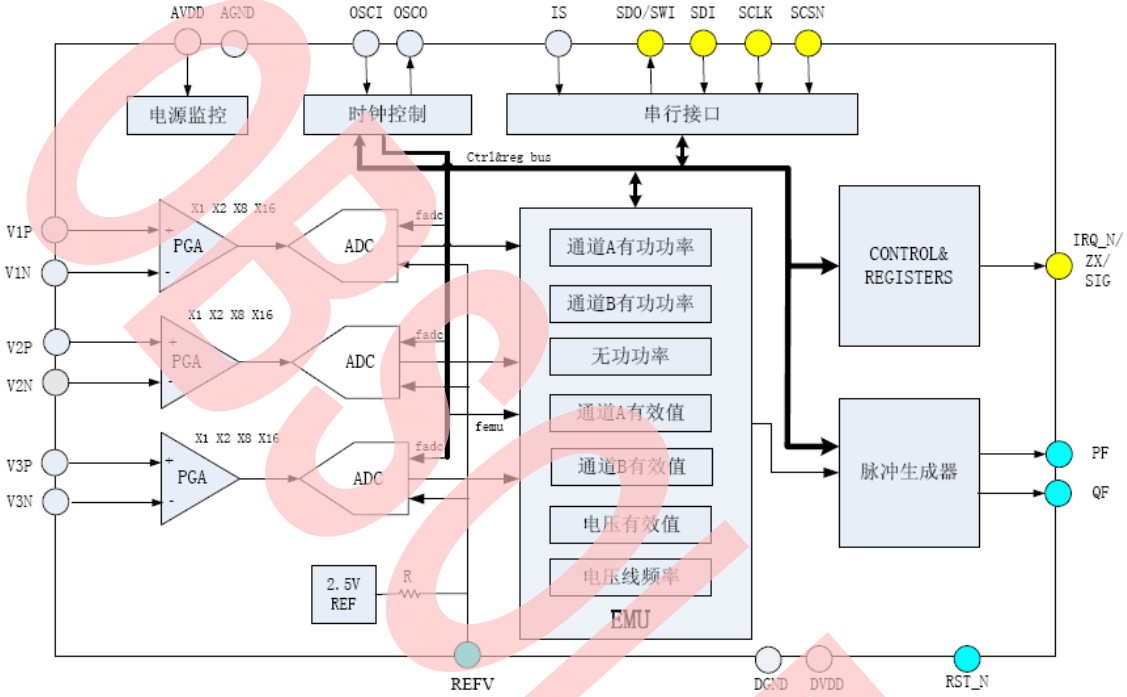

3 HW Diagram

Hardware diagram of energy measure system

3.1 The HW diagram of energy measure

Figure 2. Hardware diagram

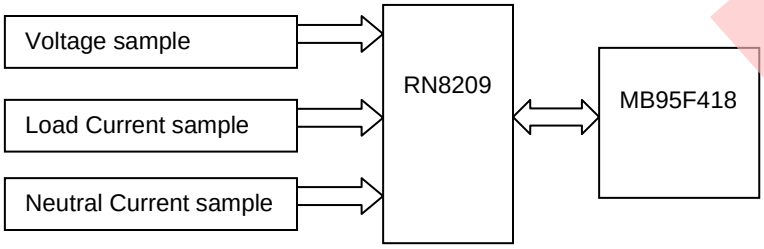

OBSOLETE

4 HW Reference SCH

Hardware reference SCH of energy measure system

Figure 3. RN8209 Periphery Diagram

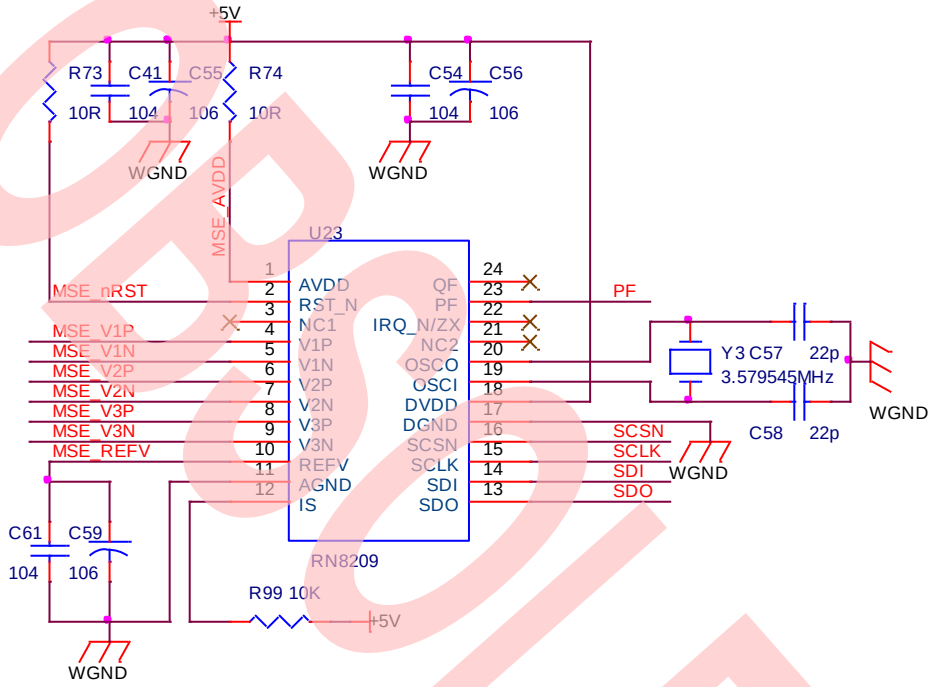

Figure 4. Load Current Sample Circuit

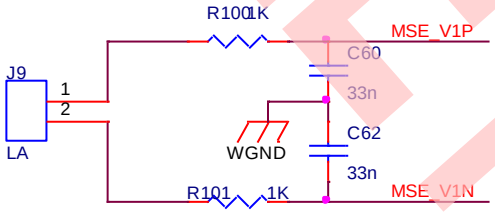

Figure 5. Neutral Current Sample Circuit

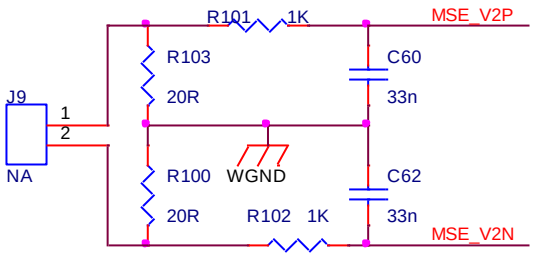

OBSOLETE

Figure 6. Voltage Sample Circuit

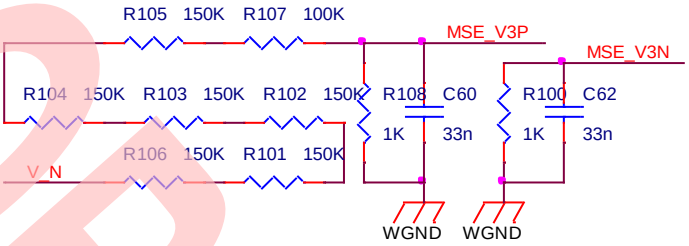

Figure 7. SPI Communication Circuit

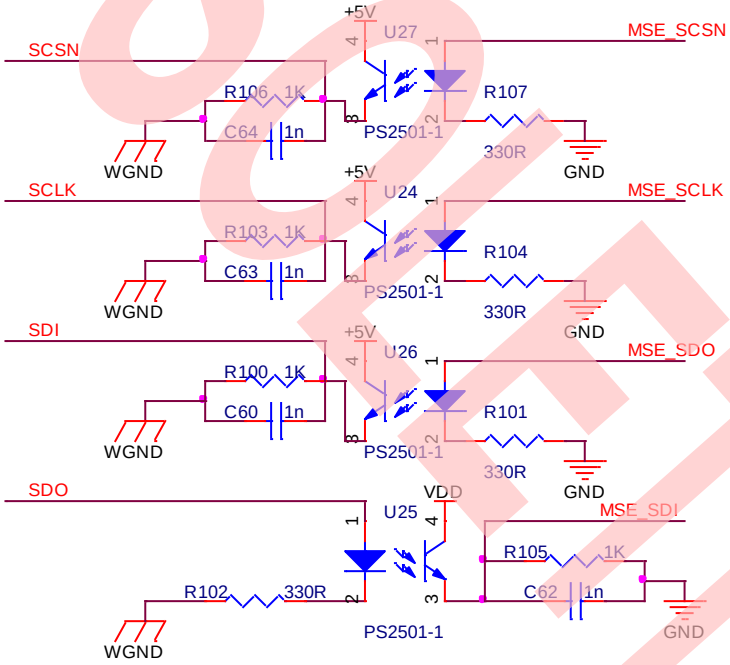

OBSOLETE

5 FW diagram

Firmware system diagram of energy measure system

5.1 SPI Frame Format

Table 1. SPI Frame Format

Command	Command Register	Data	Remark
Read Command	{0，REG_ADR[6:0]}	RDATA	
Write Command	{1，REG_ADR[6:0]}	WDATA	
Write Enable Command	0xEA	0xE5	
Write Protect Command	0xEA	0xDC	
A Channel Select Command	0xEA	0x5A	
B Channel Select Command	0xEA	0Xa5	

5.2 SPI Communication Process

Figure 8. SPI Write Process

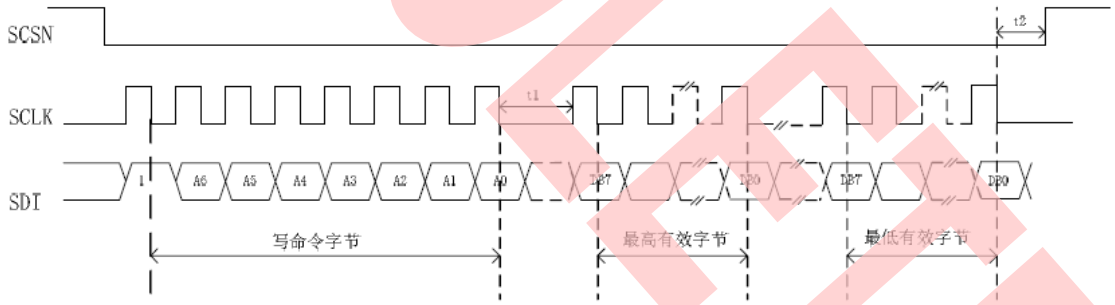

Figure 9. SPI Read Process

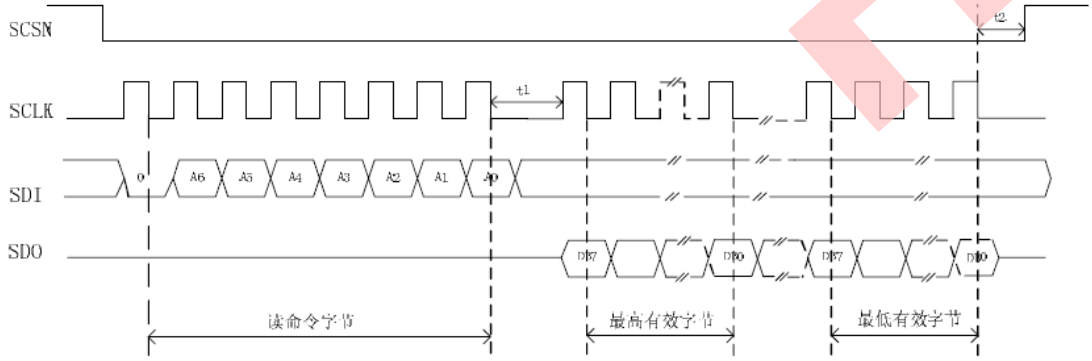

OBSOLETE

5.3 Firmware System Diagram

Figure 10. Firmware System Diagram

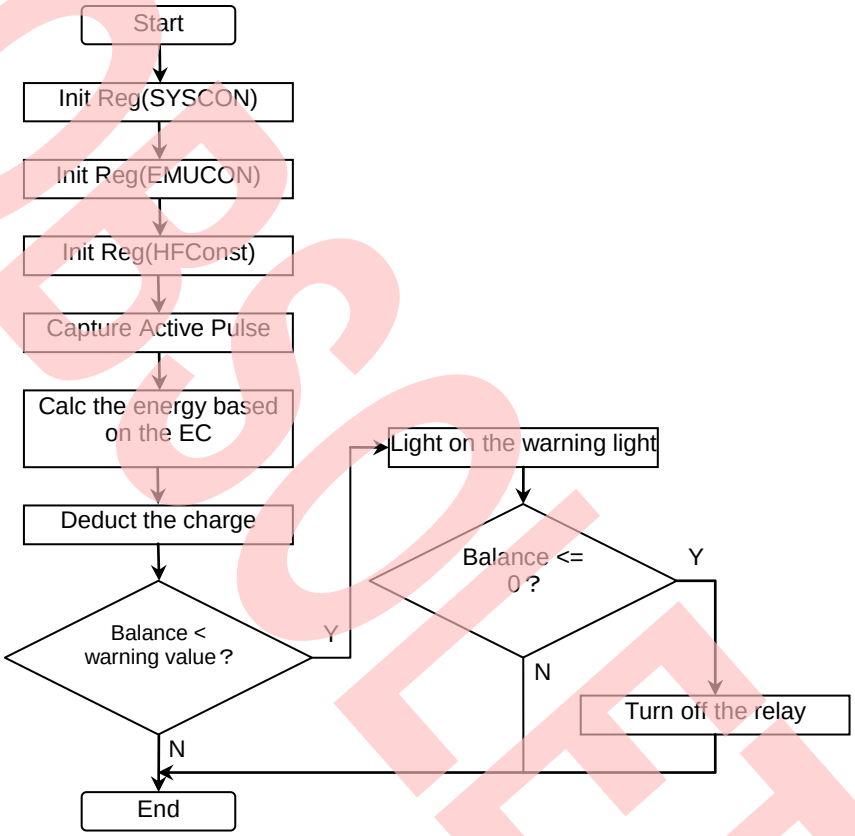

OBSOLETE

6 FW Function List

6.1 API

Table 2. FW API List 1

Function Prototype	Description
void RN8209_Reg_Init(void)	Initialize RN8209 register
void EnergyCount_Init(void)	Initialize for energy counting
void EnergyCount_Reset(void)	Reset all meter energy data
void CurEnergyCount_Reset(void)	Reset current meter energy data
void MeterKwhInc(void)	Accumulate meter KWH with each pulse received
void PowerEnergy(void)	Accumulate energy pulses & output calibration pulses
void GetMeterCurFwdEnergySum(INT8U *sumBuff)	Retrieve current sum of meter forward energy data
void GetMeterCurRevEnergySum(INT8U *sumBuff)	Retrieve current sum of meter reverse energy data
void GetMeterCurAllEnergySum(INT8U *sumBuff)	Retrieve current sum of meter total energy data
void ReadMeterRuntimeData(void)	Read meter energy data saved in EEPROM
void SaveMeterRuntimeData(void)	Save meter energy data to EEPROM
void ReadMeterConst(void)	Read meter constant from EEPROM
void ReadMeterClibData(void)	Read meter clibration data from EEPROM
void SaveMeterClibData(void)	Write meter calibration data to EEPROM
void LoadTimeSegInfo(void)	Load or reset time-seg parameter in EEPROM
void UpdateTimeSegTable(INT8U tableId, INT8U segCount, INT8U *segData)	Update time-seg table
INT8U FindTimeZoneSegTableSeriesId(INT8U idType)	Find a time-zone series ID base on current calendar
INT8U FindTimeZoneSegTableId(INT8U idType)	Find a time-zone-ID and time-seg-table-ID base on current calendar
INT8U FindTimeSegTariffId(INT8U hh, INT8U mm)	Find a time-seg tariff ID base on given time value hh(hour) & mm(minute)
void ValidateTimeZoneId(void)	Validate time-zone ID base on current calendar
void ValidateTimeSegTableId(void)	Validate time-seg table ID base on current calendar

OBSOLETE

Table 3. FW API List 2

Function Prototype	Description
void SaveLastMonthAllEnergyCounter(void)	Save last month's all energy counter value to EEPROM
void SaveLastMonthFwdEnergyCounter(void)	Save last month's forward energy counter value to EEPROM
void SaveLastMonthRevEnergyCounter(void)	Save last month's reverse energy counter value to EEPROM
void SaveCurrentEnergyCounter(void)	Save current energy counter value base on tariff ID
void LoadEnergyCounter(void)	Load meter energy counter base on energy direction state
void EnergyDirValidate(void)	Validate energy direction/state
void GetTimeSegFwdEnergySum(INT8U *sum, INT8U monthId, INT8U segId)	Get forward energy sum for a specific time segment
void GetTimeSegRevEnergySum(INT8U *sum, INT8U monthId, INT8U segId)	Get reverse energy sum for a specific time segment
void GetTimeSegAllEnergySum(INT8U *sum, INT8U monthId, INT8U segId)	Get energy forward+reversed sum for a specific time segment
void UpdateTimeSegTariffId(void)	Update tariff ID based on current time segment
INT32U GetVoltageRmsValue(void)	Get scaled voltage reading
INT32U GetLoadCurRmsValue(void)	Get scaled load current reading
INT32U GetNeutralCurRmsValue(void)	Get scaled neutral current reading
INT32U GetActivePowerValue(void)	Get scaled active power reading
INT32U GetPowerFactorValue(void)	Get scaled power factor reading

6.2 HAL

Table 4. FW HAL List

Function Prototype	Description
void SPIPortInit(void)	Initialize SPI port
void BcdEnergySumIntInc(INT8U *bcd)	Increment a 4 byte BCD energy number by 1 from integer part(bcd[2])
void BcdEnergySumDecimalAcc(INT8U *bcd, INT8U accVal)	Accumulate a 4 byte BCD energy number
void RN8209_ReadRegister(INT8U regAddr, INT8U *buff, INT8U total)	Read RN8209 register value
INT8U SPI_ReadByte(void)	Byte in through SPI port
void RN8209_WriteRegister(INT8U regAddr, INT8U *buff, INT8U total)	Write RN8209 register value
void SPI_SendByte(INT8U outDat)	Byte out through SPI port

OBSOLETE

7 Additional Information

For more Information on Cypress Semiconductor products, visit the following websites:

English version address:

www.cypress.com/cypress-microcontrollers

Chinese version address:

www.cypress.com/cypress-microcontrollers-cn

OBSOLETE

8 Document History

Document Title: AN205175 - F²MC-8FX Family, MB95410H/470H Series One Phase Power Meter energy measure chip-RN8209

Document Number: 002-05175

Revision	ECN	Orig. of Change	Submission Date	Description of Change
**	-	HUAL	05/31/2011	Initial release
*A	5247905	HUAL	06/17/2016	Migrated Spansion Application Note MCU-AN-500115-E-10 to Cypress format There is no information on how/where to acquire the RN8209 source code, so this AN is for obsolete.

OBSOLETE

Worldwide Sales and Design Support

Cypress maintains a worldwide network of offices, solution centers, manufacturer's representatives, and distributors. To find the office closest to you, visit us at Cypress Locations.

Products

ARM® Cortex® Microcontrollers	cypress.com/arm
Automotive	cypress.com/automotive
Clocks & Buffers	cypress.com/clocks
Interface	cypress.com/interface
Lighting & Power Control	cypress.com/powerpsoc
Memory	cypress.com/memory
PSoC	cypress.com/psoc
Touch Sensing	cypress.com/touch
USB Controllers	cypress.com/usb
Wireless/RF	cypress.com/wireless

PSoC® Solutions

PSoC 1 | PSoC 3 | PSoC 4 | PSoC 5LP

Cypress Developer Community

Forums | Projects | Videos | Blogs | Training | Components

Technical Support

cypress.com/support

PSoC is a registered trademark and PSoC Creator is a trademark of Cypress Semiconductor Corporation. All other trademarks or registered trademarks referenced herein are the property of their respective owners.

Cypress Semiconductor
198 Champion Court
San Jose, CA 95134-1709

Phone : 408-943-2600
Fax : 408-943-4730
Website : www.cypress.com

© Cypress Semiconductor Corporation, 2011-2016. This document is the property of Cypress Semiconductor Corporation and its subsidiaries, including Spansion LLC ("Cypress"). This document, including any software or firmware included or referenced in this document ("Software"), is owned by Cypress under the intellectual property laws and treaties of the United States and other countries worldwide. Cypress reserves all rights under such laws and treaties and does not, except as specifically stated in this paragraph, grant any license under its patents, copyrights, trademarks, or other intellectual property rights. If the Software is not accompanied by a license agreement and you do not otherwise have a written agreement with Cypress governing the use of the Software, then Cypress hereby grants you a personal, non-exclusive, nontransferable license (without the right to sublicense) (1) under its copyright rights in the Software (a) for Software provided in source code form, to modify and reproduce the Software solely for use with Cypress hardware products, only internally within your organization, and (b) to distribute the Software in binary code form externally to end users (either directly or indirectly through resellers and distributors), solely for use on Cypress hardware product units, and (2) under those claims of Cypress's patents that are infringed by the Software (as provided by Cypress, unmodified) to make, use, distribute, and import the Software solely for use with Cypress hardware products. Any other use, reproduction, modification, translation, or compilation of the Software is prohibited.

TO THE EXTENT PERMITTED BY APPLICABLE LAW, CYPRESS MAKES NO WARRANTY OF ANY KIND, EXPRESS OR IMPLIED, WITH REGARD TO THIS DOCUMENT OR ANY SOFTWARE OR ACCOMPANYING HARDWARE, INCLUDING, BUT NOT LIMITED TO, THE IMPLIED WARRANTIES OF MERCHANTABILITY AND FITNESS FOR A PARTICULAR PURPOSE. To the extent permitted by applicable law, Cypress reserves the right to make changes to this document without further notice. Cypress does not assume any liability arising out of the application or use of any product or circuit described in this document. Any information provided in this document, including any sample design information or programming code, is provided only for reference purposes. It is the responsibility of the user of this document to properly design, program, and test the functionality and safety of any application made of this information and any resulting product. Cypress products are not designed, intended, or authorized for use as critical components in systems designed or intended for the operation of weapons, weapons systems, nuclear installations, life-support devices or systems, other medical devices or systems (including resuscitation equipment and surgical implants), pollution control or hazardous substances management, or other uses where the failure of the device or system could cause personal injury, death, or property damage ("Unintended Uses"). A critical component is any component of a device or system whose failure to perform can be reasonably expected to cause the failure of the device or system, or to affect its safety or effectiveness. Cypress is not liable, in whole or in part, and you shall and hereby do release Cypress from any claim, damage, or other liability arising from or related to all Unintended Uses of Cypress products. You shall indemnify and hold Cypress harmless from and against all claims, costs, damages, and other liabilities, including claims for personal injury or death, arising from or related to any Unintended Uses of Cypress products.

Cypress, the Cypress logo, Spansion, the Spansion logo, and combinations thereof, PSoC, CapSense, EZ-USB, F-RAM, and Traveo are trademarks or registered trademarks of Cypress in the United States and other countries. For a more complete list of Cypress trademarks, visit cypress.com. Other names and brands may be claimed as property of their respective owners.

OBSOLETE