Please note that Cypress is an Infineon Technologies Company.
The document following this cover page is marked as “Cypress” document as this is the company that originally developed the product. Please note that Infineon will continue to offer the product to new and existing customers as part of the Infineon product portfolio.

Continuity of document content
The fact that Infineon offers the following product as part of the Infineon product portfolio does not lead to any changes to this document. Future revisions will occur when appropriate, and any changes will be set out on the document history page.

Continuity of ordering part numbers
Infineon continues to support existing part numbers. Please continue to use the ordering part numbers listed in the datasheet for ordering.

The following document contains information on Cypress products. The document has the series name, product name, and ordering part numbering with the prefix “MB”. However, Cypress will offer these products to new and existing customers with the series name, product name, and ordering part number with the prefix “CY”.

How to Check the Ordering Part Number

1. Go to www.cypress.com/pcn.
2. Enter the keyword (for example, ordering part number) in the **SEARCH PCNS** field and click **Apply**.
3. Click the corresponding title from the search results.
4. Download the Affected Parts List file, which has details of all changes

For More Information

Please contact your local sales office for additional information about Cypress products and solutions.

About Cypress

Cypress is the leader in advanced embedded system solutions for the world's most innovative automotive, industrial, smart home appliances, consumer electronics and medical products. Cypress' microcontrollers, analog ICs, wireless and USB-based connectivity solutions and reliable, high-performance memories help engineers design differentiated products and get them to market first. Cypress is committed to providing customers with the best support and development resources on the planet enabling them to disrupt markets by creating new product categories in record time. To learn more, go to www.cypress.com.

AN204876

F²MC-16FX Family, MB96600 Series Hardware Set Up

This application note describes how to set up a hardware environment for Cypress 16FX MCUs

Contents

1 Introduction....1
2 Minimal System....1
2.1 Schematic....2
2.2 Serial Interface....2
2.3 Power supply....2
2.4 Analog Digital Converter Supply Pins....2
2.5 Analog Input Pins....2
2.6 Reset Pin (RSTX)....3
2.7 C Pin....3
2.8 Clock Source....3
2.9 Mode Pins....3
2.10 NC Pins....3
2.11 Debug Interface connection....3
3 Layout and Electromagnetic Compatibility....4
3.1 General....4
3.2 Power Line Routing....5
3.3 C Pin Decoupling....5
3.4 Power Supply Decoupling....6
3.5 Quartz Crystal Placement and Signal Routing....8
3.6 MCU Pin Summary....9
4 Port Input / Unused Pins / Latch-up....10
4.1 Port Input / Unused Pins....10
4.2 Latch-up consideration (switch)....11
5 Minimum Flash Programming Connection....14
5.1 Run mode and Programming Mode....14
5.2 Programming Pins....15
5.3 Asynchronous Programming....16
5.4 Synchronous Programming....17
5.5 External Watchdog during Flash Programming....18
A Appendix....20
A.1 Documentation References....20
Document History....21
Worldwide Sales and Design Support....22
Products....22
PSoC® Solutions....22
Cypress Developer Community....22
Technical Support....22

1 Introduction

This application note describes how to set up a hardware environment for Cypress 16FX MCUs. As an example the MB96F34x MCU is used.

2 Minimal System

This Chapter Gives an Example of a Minimum Hardware System

2.1 Schematic

The following graphic shows a schematic of a minimum hardware system. Note that for other MCU families a different pinning is needed.

Figure 1. Small ECU System

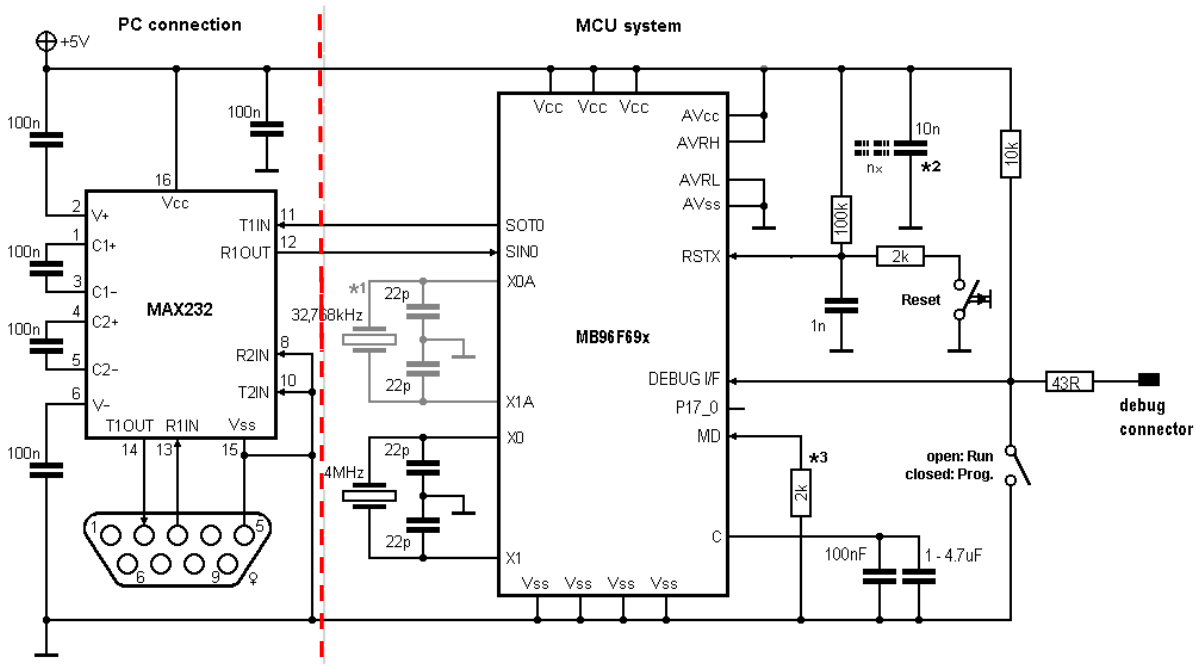

*1 only needed for dual clock devices.
*2 please refer to chapter 3
*3 If PCB has good EMI routing, resistors can be 0Ω for mode pins

2.2 Serial Interface

The “PC connection” section is only needed, if no 5V external serial data lines for programming exist. The MAX232 is a standard level shifter, which converts the 5V levels of the MCU to ±12V RS232V24 levels and vice versa.

If you use a 3.3V system a MAX3232 is recommended.

Please consider, that the internal charge pumps of the level shifter can produce noise on the +5 Volts line, which can influence the ADC, if AVcc and AVRH are directly (unfiltered) connected to it.

2.3 Power supply

The power supply should be from 2.7 Volts to 5.5 Volts for normal usage. If a different supply voltage is used please refer to the corresponding data sheet.

2.4 Analog Digital Converter Supply Pins

The analog converter supply pins (AVcc, AVss, AVRH, AVRL) should be connected even if the ADC of the MCU is not used. Please refer to our application note *mcu-an-300215-e-16fx_adc* for using the ADC and pin connection.

2.5 Analog Input Pins

Because the ADC works with an internal sample capacitor the input impedance and external capacity must be low. Cypress recommends an input impedance maximum 15k Ohm. Choose the external capacity as low as possible (about 1 nF for EMI protection).

2.6 Reset Pin (RSTX)

To reset the MCU a switch connects this pin to Vss (Ground). As there is no internal pull-up resistor, an external pull-up resistor with 100k is required. Additionally a capacitor has to be connected between Vss and the reset pin for debouncing the switch and for EMI protection. From experience Cypress recommend a capacity of not more than 1 nF. This capacity covers the most common frequency protection in a wide range. Higher capacities and high impedance may cause latch-up effects together with an RSTX-Switch and low EMI protection.

For further information please refer to the general application note *mcu-an-300219-e-16fx_reset*.

2.7 C Pin

A 1 µF – 4.7 µF ceramic capacitor (dielectric X7R, e. g. 4,7 µF) *must* be connected close to the C pin of the MCU. Furthermore a 100nF (dielectric X7R) for higher noise frequencies is recommended. Otherwise the MCU may not operate correct or will be damaged in worst case (see chapter 3).

2.8 Clock Source

A clock source must be provided to the MCU. Therefore crystals or external clock signals can be used. For external source pin X0 (X0A) is used whereby pin X1 (X1A) is not connected.

The sub clock can be enabled via by software. If sub clock X0A pin is neither used as GPIO nor as clock input, the pin can be left open.

Please also refer to the chapter *Outline/Precautions for Device Handling* in the corresponding hardware manual for details.

2.9 Mode Pins

The mode pins signalize the MCU the current operation mode. For a minimal system only two modes are necessary: Flash-Asynchronous-Serial-Programming-Mode and Run Mode. The MD-pin ought to be assembled with 2k pull-up resistor. The common mode and debug pin ‘DEBUG I/F’ must be 10k pull-up due to debug purposes.

They should be pulled-up with 2k resistors. If the PCB routing is protected ESD and EMI influence, the mode pins can be connected directly to Vss and GND, but please see chapter 4.

The following settings are used for the both modes mentioned above:

Table 1. Mode Pin Settings

Mode	DEBUG I/F	P17_0	MD
Serial Programming Mode	0	x	0
Run (Internal Vector Mode)	1	x	0

x: do not care

2.10 NC Pins

In default state after power-on reset usually the GPIO pins are in high-z state. So in this normal use case pins can be left open. But do not leave input pins open, when input pin functionality is enabled (`PIERxy_IEz = 1`). Concerning special use cases it is referred to chapter 4 for how to proceed with unused (not connected) pins.

2.11 Debug Interface connection

Debugging is only supported only by the 50 Ohm single-wire debug system, which is shared with mode pin ‘DEBUG I/F’. As the ‘DEBUG I/F’ is required for switching into programming mode, there is a proposal how to connect debug connector and programming connector with the pin (see Figure 2). Concerning current limitation by an external resistor on programming tool side and maximum clamping current/structure at the ‘DEBUG I/F’ pin specified values must be taken out of data sheet

Figure 2. How to Connect Debug System with Programming Connector

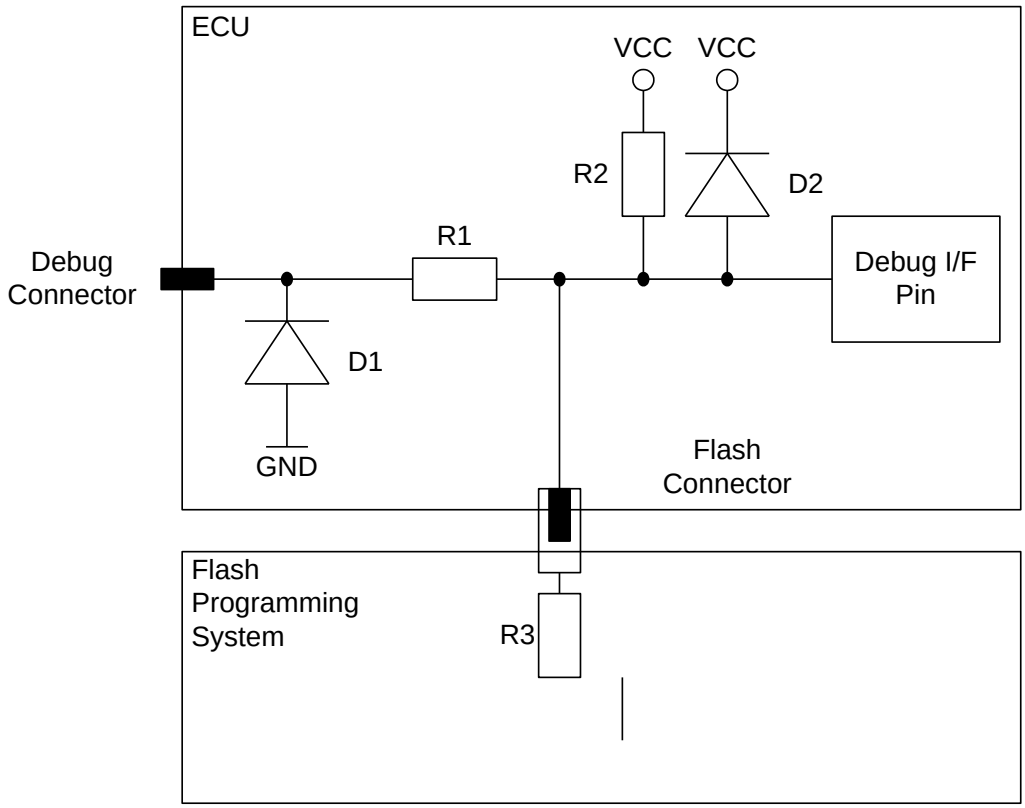

R1= 43 R, R2 = 10 k, R3 = tbd, D1 = HZM6.2Z4MFA-E, D2 = tbd

Please check for detailed OCDS layout design rules the MB2100-01-E (see chapter A) manual and the chapter ‘OCD’ of the hardware manual.

3 Layout and Electromagnetic Compatibility

This Chapter Gives Some Tips for Layout Design

3.1 General

To avoid ESD problems and noise emission of the system some rules for the layout design have to be observed.

The most critical point is the C pin because this is the connection to the internal 1.8 V supply for the MCU core. Thus the two decoupling capacitors have to be placed very near to this pin.

Also the ground and Vcc routing has to be done carefully. Vcc lines should be routed in star shape. We recommend a Vss ground plane *on the mounting side* just under the MCU. For both Vcc and Vss only *one* connection to the rest of the circuit should be done, otherwise noise is carried-over from and to the MCU. Decoupling capacitors (DeCaps) have to be placed as near as possible to the related pins. If they are placed too far away, their functionality becomes useless.

If crystals are used, they have to be placed as near as possible to the Xn(A) pins.

If possible all decoupling capacitors should be placed on the same mounting side as the MCU.

3.2 Power Line Routing

In general the Vcc and Vss lines should not be routed in “chains”, but in “star shape”. For Vss a ground plane is recommended which covers the chip package, and is connected in *one* point to Vss of the whole circuit.

Below is a example of a bad and a good power line routing:

Figure 3. Power Line Routing

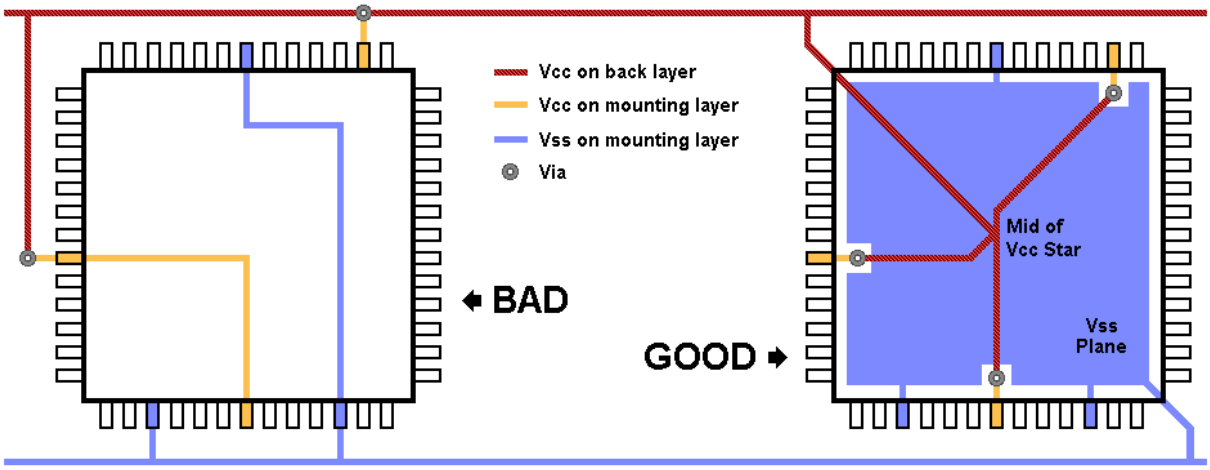

3.3 C Pin Decoupling

The following routing and placement for single sided metal layer is recommended (Note, that in all following illustrations the mounting metal layer is drawn in black and the back side metal layer in gray):

Figure 4. C Pin Decoupling with Single Sided Metal Layer

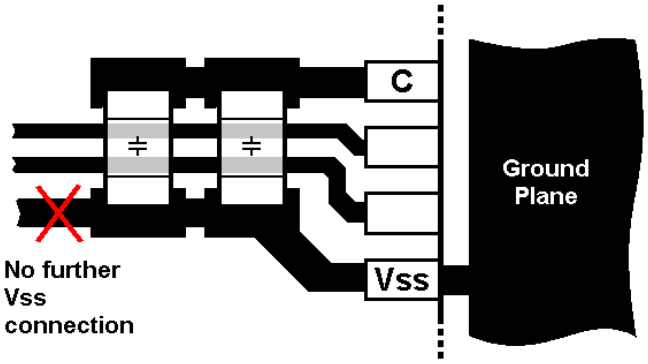

The following routing and placement for double sided metal layer is recommended. Note, that despite the capacitors are placed on the opposite side as the MCU, this solution is the best.

Figure 5. C Pin Decoupling with Double Sided Metal Layer

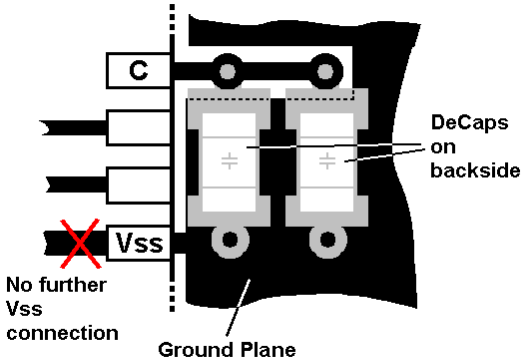

3.4 Power Supply Decoupling

DeCaps for power supply have to be placed within the “current flow”. Otherwise they are senseless, because then their function become inoperable. The following graphic illustrates this:

Figure 6. Power Supply Decoupling

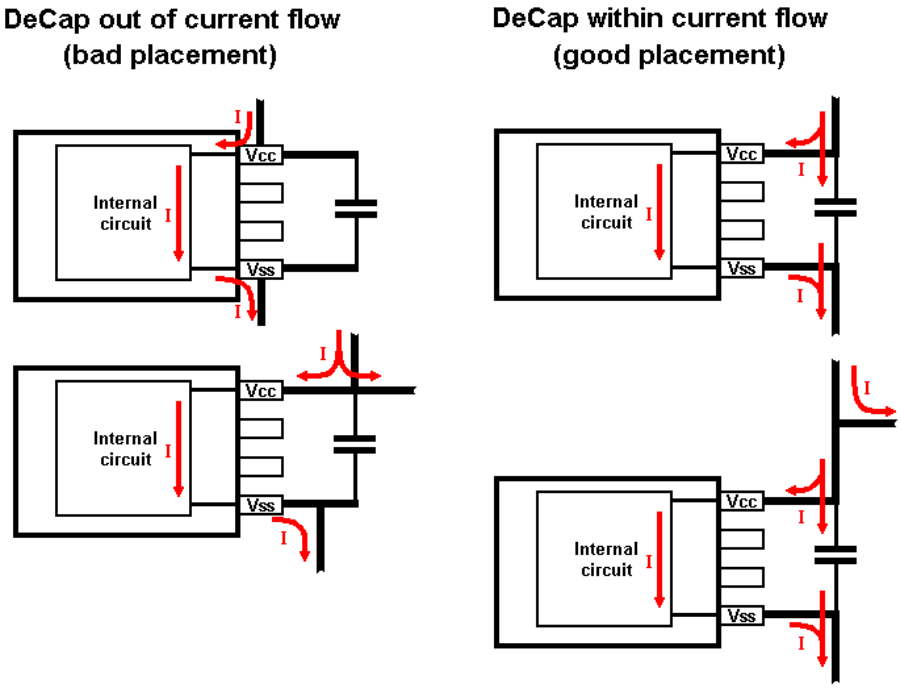

For EMI reasons all decoupling capacitors should have the same capacitance, so that all have a common resonance frequency. Cypress recommends 10nF (~100 MHz resonance) to 100nF (~10 MHz resonance) depending on application.

The following routing and placement for single sided metal layer is recommended:

Figure 7. Power Supply Decoupling Recommendation for Single Sided Metal Layer

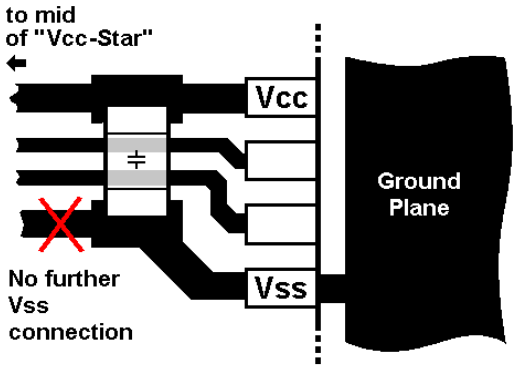

The following routing and placement for double sided metal layer is recommended. Note, that despite the capacitor is placed on the opposite side as the MCU, this solution is the best like for the C pin.

Figure 8. Power Supply Decoupling Recommendation for Double Sided Metal Layer (2)

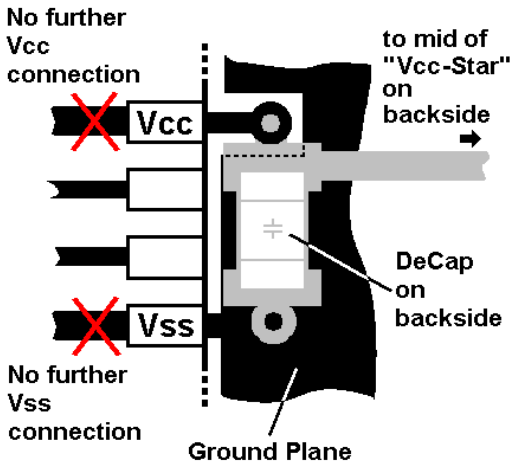

If mounting on both sides is not possible the following placement and routing is recommended:

Figure 9. Power Supply Decoupling Recommendation for Double Sided Metal Layer (1)

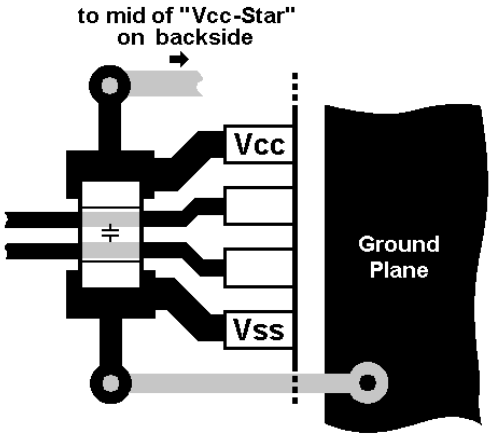

3.5 Quartz Crystal Placement and Signal Routing

The crystal has to be placed as nearest as possible to the MCU. Therefore the oscillator capacitors have to be placed “behind” the crystal.

For single metal layer circuit board the following placement and signal routing is recommended in Figure 10

Figure 10. Quartz Oscillator Layout Design Single Sided Metal Layer Layout

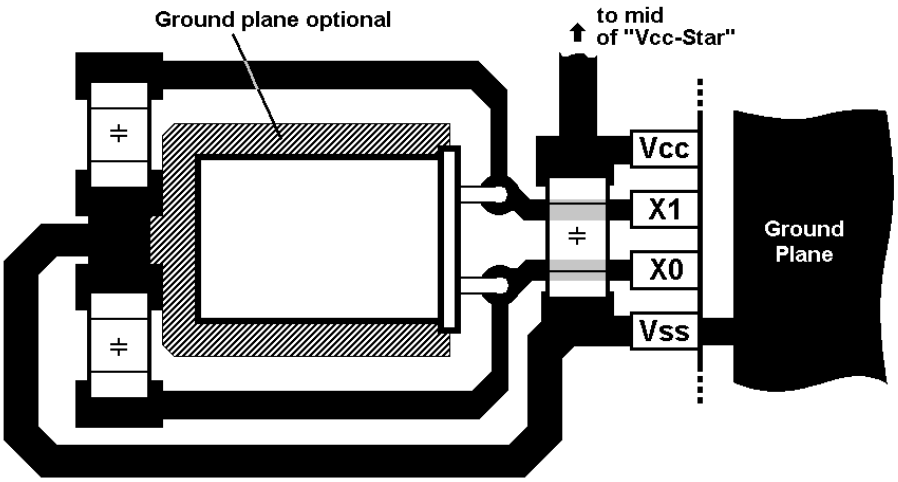

For double sided metal layer layout the following is recommended in Figure 11:

Figure 11. Quartz Oscillator Layout Design Double Sided Metal Layer Layout

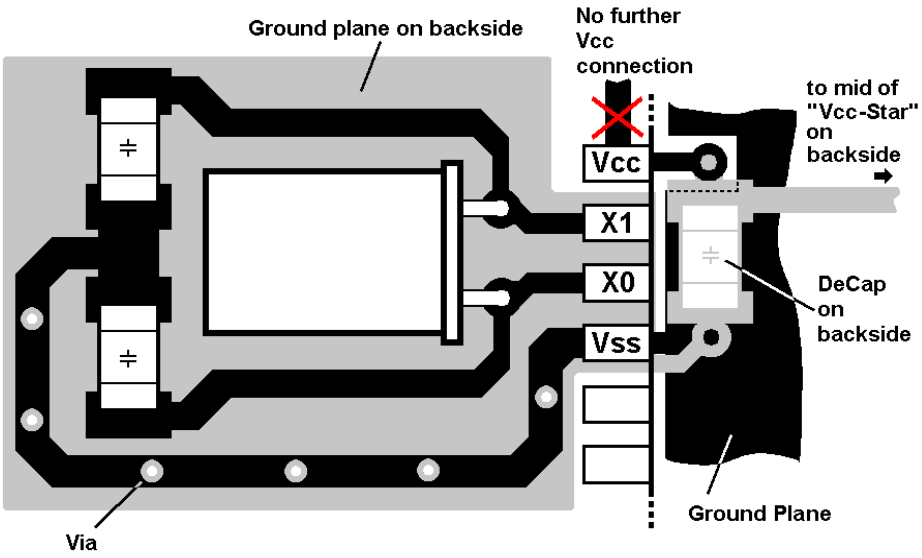

3.6 MCU Pin Summary

The following table shows the EMC critical pins and gives short information about how to connect them.

Pin name	Function
VCC	Main supply for IO buffer MCU core, close to input the internal 3.3V regulator, close to crystal oscillator
VSS	Main supply for IO buffer and MCU core, close to the internal 3.3V regulator, close to crystal oscillator
C	External 1..10µF ceramic capacitor (dielectric X7R) as smooth capacitors for internal 1.8V regulator output, it is used for supply of the MCU core. Note, that this pin leads the most of noise. Please refer to the DS of used MCU series for selection of capacitance value.
AVCC*	Power supply for the A/D converter
AVSS*	Power supply for the A/D converter
AVRL*	Reference voltage input for the A/D converter
AVRH*	Reference voltage input for the A/D converter
DVCC*, HVCC*	Power supply for the PWM (high current) outputs, it is not connected to VCC, should be connected to extra power supply
DVSS*, HVSS*	Power supply for the PWM (high current) outputs, it is not connected to VSS, should be connected to extra power supply
X0	Oscillator input: if not used so shall be connected with pull-up or pull-down resistor (see please DS)
X1	Oscillator output: the crystal and bypass capacitor must be connected via shortest distance with X1 pin, if not used so shall be open.
X0A, X1A	shared oscillator and GPIO pins. If pins are unused, pins must be configured as input (see chapter 4.1).

*only if supported by device

4 Port Input / Unused Pins / Latch-up

How to connect Input Port Pins and how to proceed with unused Pins

4.1 Port Input / Unused Pins

It is strongly recommended to not keep pins unconnected, while they are switched to input. In this case those pins can enter a so-called *floating state*. This can cause a high I_{CC} current, which is adverse to low power modes. Also damage of the MCU can happen.

Use the internal pull-up resistors in this case. If not, use external pull-up or pull-down resistors to define the input-level.

Rule 1: The recommended way is to set the port input enable to "0", if a port pin is unconnected.

Rule 2: Never connect a potential divider with almost same resistor values.

Figure 12. Do's and Don't Do's for Input Pins

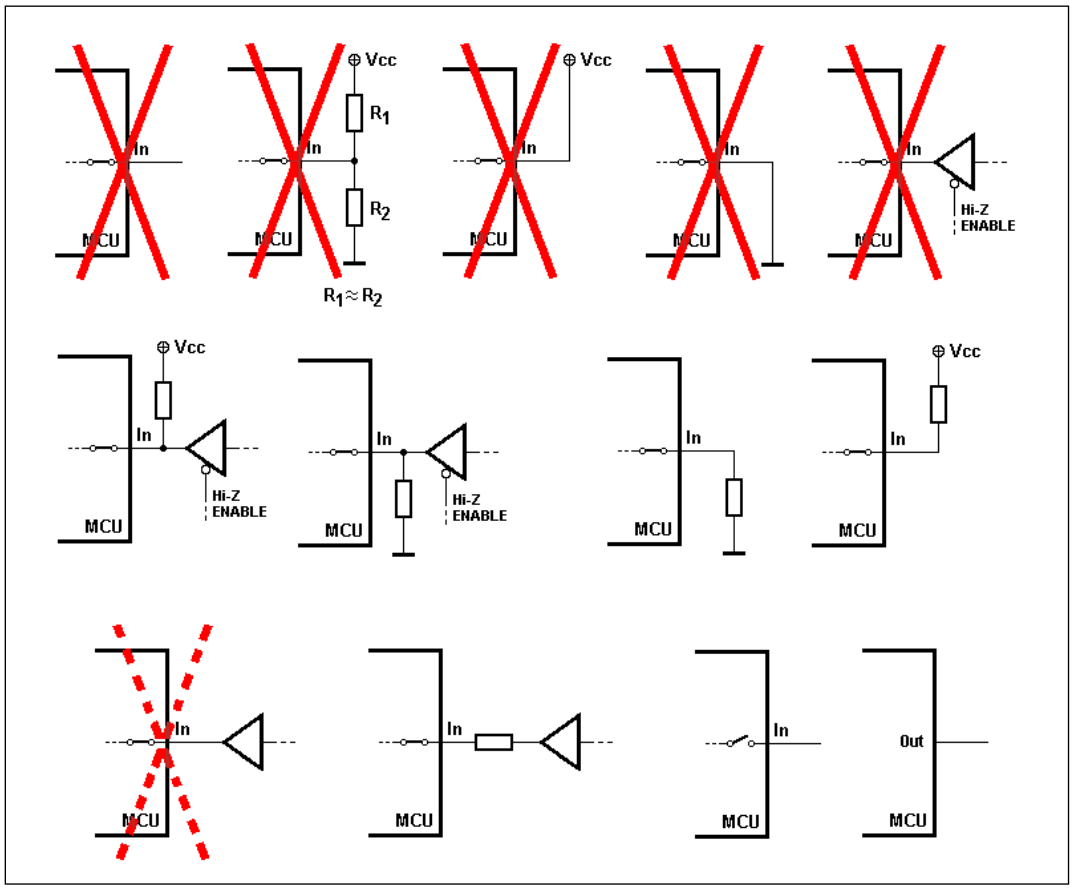

Be careful with connection of input pins to other devices, which can go into High-Z states. Always use internal pull-up or external pull-up or pull-down resistors in this case.

Outputs from external circuits should always be connected via a serial resistor to a MCU input pin to prevent latch-up effects caused by under- or overshoots (4.2).

Debouncing and decoupling capacitors should always be chosen as smallest as possible. Please refer to chapter 4.2.

All pins are set to input disabled after its power-on default.

Rule 3: Do not connect any input ports directly to VCC or VSS (GND)! Always use pull up or down resistors (2k … 4k Ohms).

4.2 Latch-up consideration (switch)

Be careful with external switches to V_{CC} or ground together with debouncing capacitors connected to port pins.

A usual configuration is shown in the following schematic:

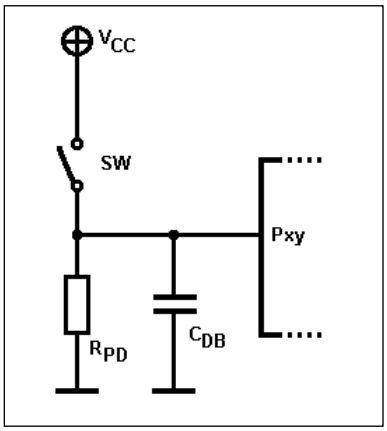

R_{PD} is a pull-down resistor and C_{BD} a debouncing capacitor. If the switch SW is open, a “0” is read from the port pin Pxy. If the switch is closed the input changes to “1”.

From the physical aspect, it has to be considered, that the switch is often placed in distance to the MCU by cable, wire, or circuit path. The longer the circuit path is the higher will be its inductivity L_X (and capacity C_X).

An equivalent circuit diagram looks like the following illustration:

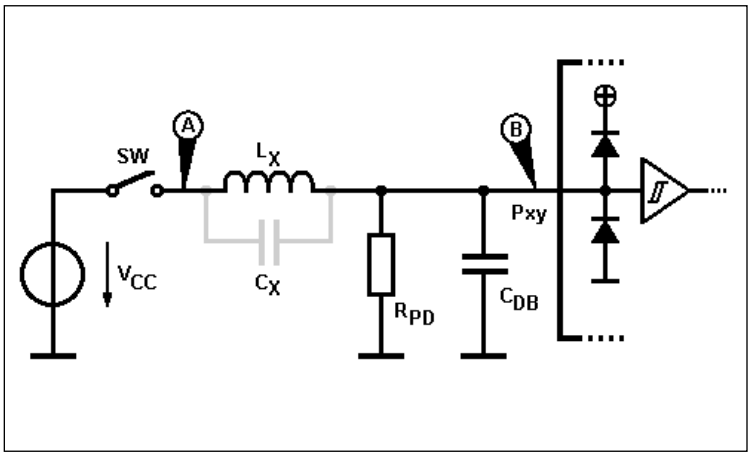

By closing the switch SW at time t_0 the following voltage can be measured at point (A):

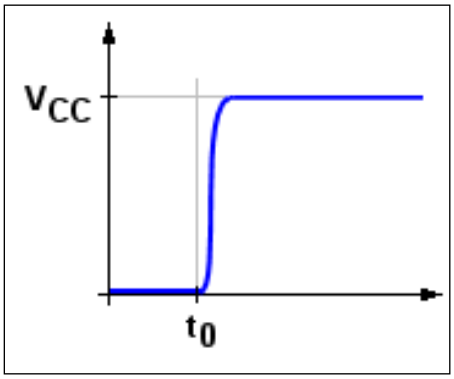

But at the port pin Pxy on point (B) the following voltage can be measured:

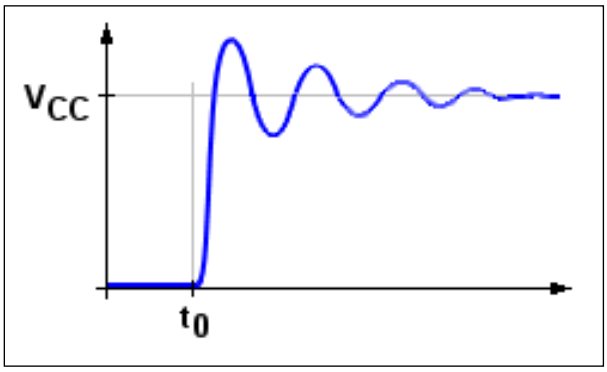

By closing the switch SW the circuit becomes a parallel oscillator with the wire-inductivity L_X, the debouncing capacity C_X and the damping R_{PD} of the pull-down resistor (Assume the power supply to be ideal, i. e. it has no internal resistance):

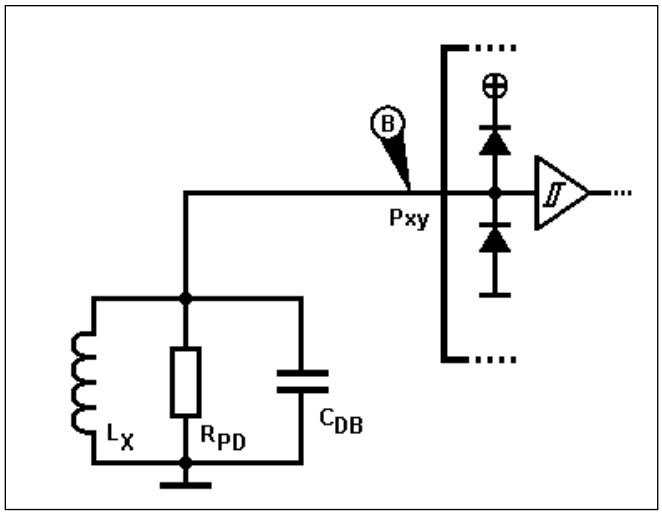

Because R_{PD} is often chosen high (> 50 K Ohms), its damping effect is weak.

This (weakly) attenuated oscillator causes voltage overshoots on the port pin, drawn in red in the illustration below:

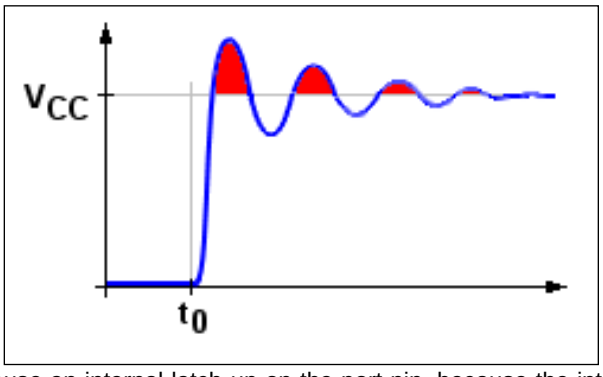

These overshoots may cause an internal latch-up on the port pin, because the internal clamping diode connected to V_{CC} becomes conductive. Similar is the effect, if the switch SW is opened. In this case there are under shoots on the port pin.

The frequency of the oscillation can be calculated by

$$f_{OSC} = \frac{1}{2\pi\sqrt{L_X C_{DB}}} .$$

The inductivity L_X is the unknown value and depends on the PCB, its routing, and the wire lengths.

There are two counter measurements to prevent from latch-up.

One solution is to decrease the capacity of the debouncing capacitor. This increases the oscillation frequency, and the over-all energy of the overshoots is smaller.

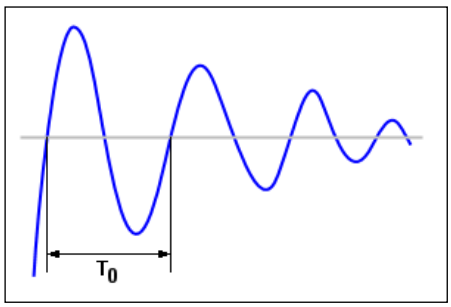

"big" capacity

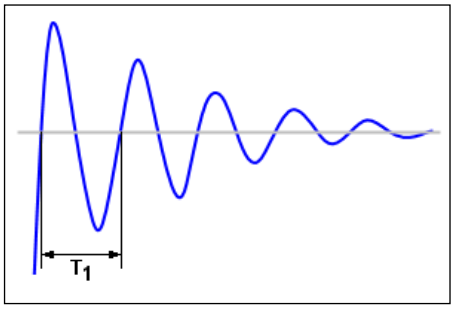

"small" capacity

This solution has two disadvantages: First the debouncing effect decreases and second, there is no guarantee, that the latch-up condition is eliminated.

A better solution is to use a series resistor at the port pin like in the following schematic:

Figure 13. Recommended External Switch Circuit with Pull Down

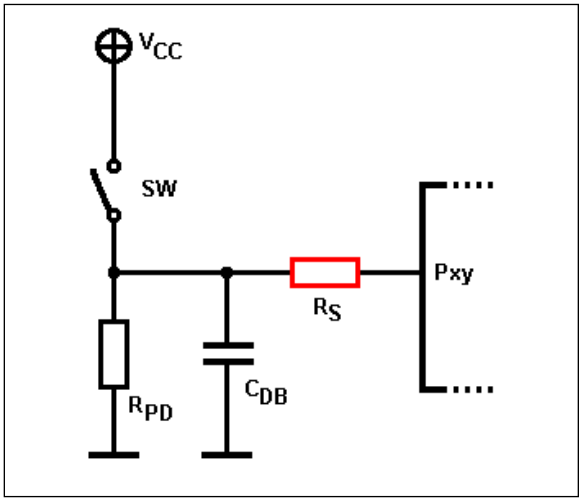

The series resistor R_S reduces the amplitude of the oscillation and decreases the voltage offset at first. The resistor must not be chosen too high, so that the port pin input voltage V_P is within the positive CMOS/TTL/Automotive level.

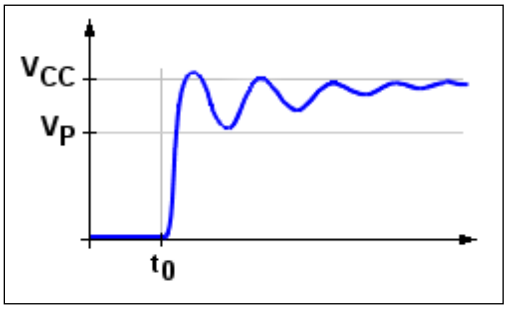

5 Minimum Flash Programming Connection

This Chapter Shows Which Connections are needed for Programming

5.1 Run mode and Programming Mode

When using a target board, which normally operates in run mode, the mode pins of the MCU has to be set to DEBUG I/F = 1, and MD = 0. It is possible to switch to serial programming mode via a connector. A programming device has to provide then certain voltage levels for the mode pins and port pins.

Additionally it is possible to enable USART scanning in run mode by setting the magic word at address `0xDF0034`. In this case the mode pins do not needed to be changed for programming and run mode. Programming is possible after Reset. If no communication is present after Reset, the application is started.

5.2 Programming Pins

For serial programming the following pins are affected:

1. DEBUG I/F
2. P17_0 (only for parallel Flash programming mode required)
3. MD0
4. SINn
5. SOTn
6. SCKn (If synchronous programming is used)
7. RSTX

The electrical levels of the mode pins MD and DEBUG I/F are mandatory. These pins select the overall mode of the MCU after Reset (RSTX). The other pins are the communication pins of the USART (SINn, SCKn, SOTn).

Rule 4: Which USART instance can be applied for the programming mode must be taken from the data sheet chapter "SERIAL PROGRAMMING COMMUNICATION INTERFACE".

In the examples below USART0 is used. Please refer to the Application Note *mcu-an-300224-e-16fx_mcu_flash_prog_bi_rom* for which USARTS can be used for programming.

5.3 Asynchronous Programming

The following schematic shows a possible configuration:

Figure 14. Connection Proposal for Asynchronous Programming

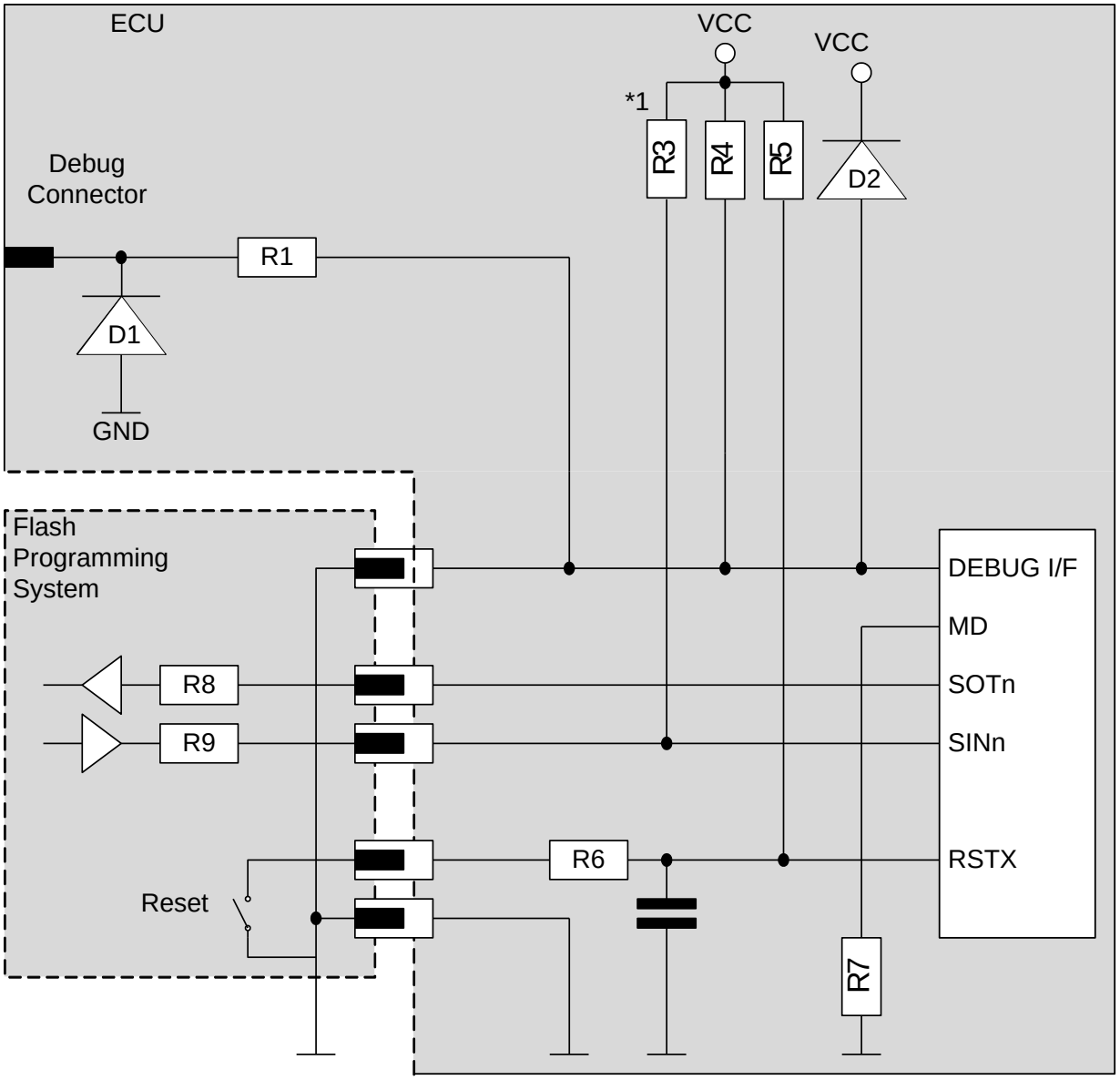

*1 only required, if floating level expected

R1 = 43R, R3/R4/R6/R7 >= 2k2, R8/R9 = 10k, R5 = 100k, D1= HZM6.2Z4MFA-E, D2 = tbd, C1 = 1nF

MD1 and MD2 can be directly connected to Vcc1 and ground, if these lines are short. If ESD pulses are to expect, minimum two 2k pull-up and –down resistors have to be used, as shown in the schematic above.

When the programmer is connected, MD0 is connected to ground. This configuration with MD1 = 1 and MD2 = 0 the MCU is in serial programming mode then.

If USART scanning is enabled, the programmer connection to DEBUG I/F can be removed.

5.4 Synchronous Programming

The following schematic shows a possible configuration:

Figure 15. Connection Proposal for Synchronous Programming

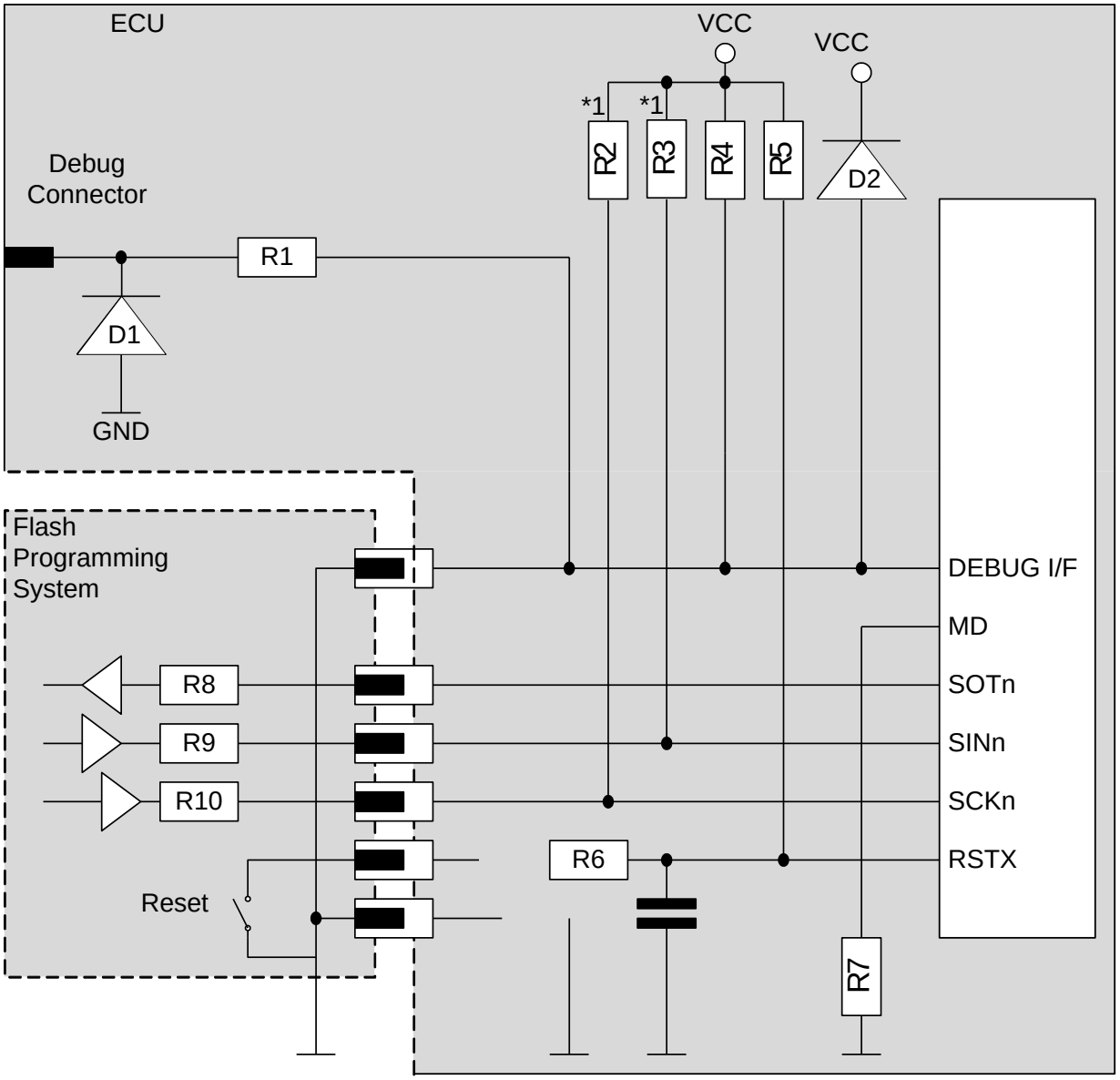

*1 only required, if floating level expected

R1 = 43R, R3/R4/R6/R7 >= 2k2, R8/R9/R10 = 10k, R5 = 100k, D1= HZM6.2Z4MFA-E, D2 = tbd, C1 = 1nF

The recommendations for the port pin of SIN0 are the same as in the example above (5.3). Note, that SCK0 has to be threatened electrically equal to SIN0.

If USART scanning is enabled, the programmer connection to MD0 can be removed.

5.5 External Watchdog during Flash Programming

Assume an external watchdog is used, which is contained in many 5V Voltage regulators (e. g. TLE 4271). During flash programming the internal Burn-in-ROM code does not toggle the watchdog input and a reset would be performed. To prevent this, an additional circuit at the discharge capacitor can be used during programming mode. In this case the capacitor will not discharge and the watchdog itself will not perform a reset.

The following schematic shows a possible solution:

Figure 16. Connection Proposal for Flash Programming with External Watchdog

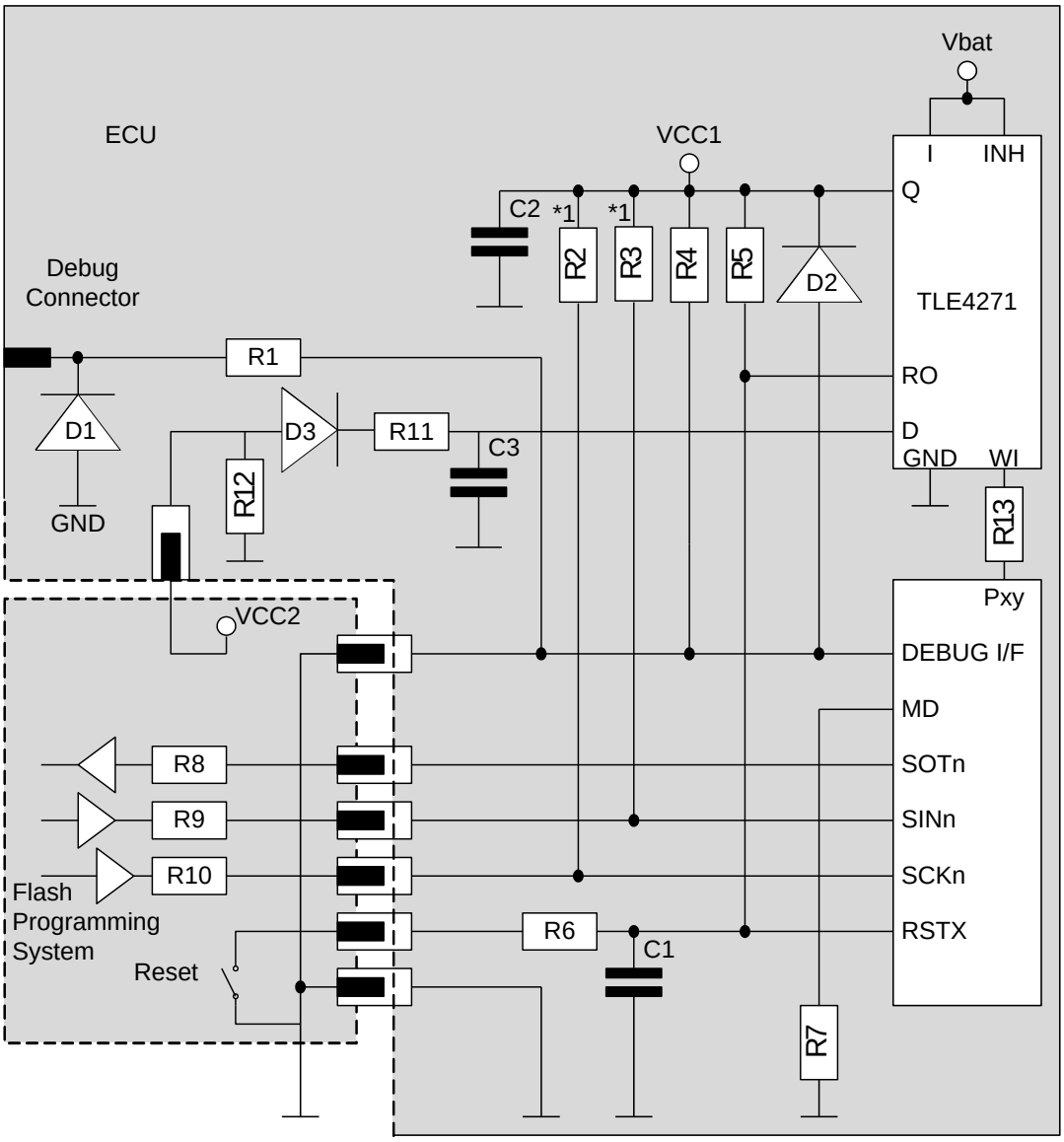

*1 only required, if floating level expected for details
R1 = 43R, R3/R4/R6/R7 >= 2k2, R8/R9/R10/R13 = 10k, R11/R12 = 10k, R5 = 100k,
D1= HZM6.2Z4MFA-E, D2 = tbd,D3 = 1N 4148, C1 = 1nF, C2 = 220uF, C3 = 100nF

Assume the power of the MCUs circuits is off. Then the programmer is connected and the power is switched on – the reset phase begins. The “high level” from the Vcc2 connector of the programmer is used via a diode and a 100 k resistor to prevent the 100nF capacitor from discharging.

In normal run mode, the programmer is disconnected. The diode is insulating and even pulled-down, so that the capacitor for the watchdog is able to discharge again.

Connector at *2 can be removed with the connector chassis, if the ground levels of MCU board and programmer do not have a voltage pitch or shift. Additionally the DEBUG I/F-ground connection can be removed, if USART scanning is enabled.

5.5.1 Timing Diagram of Run Mode

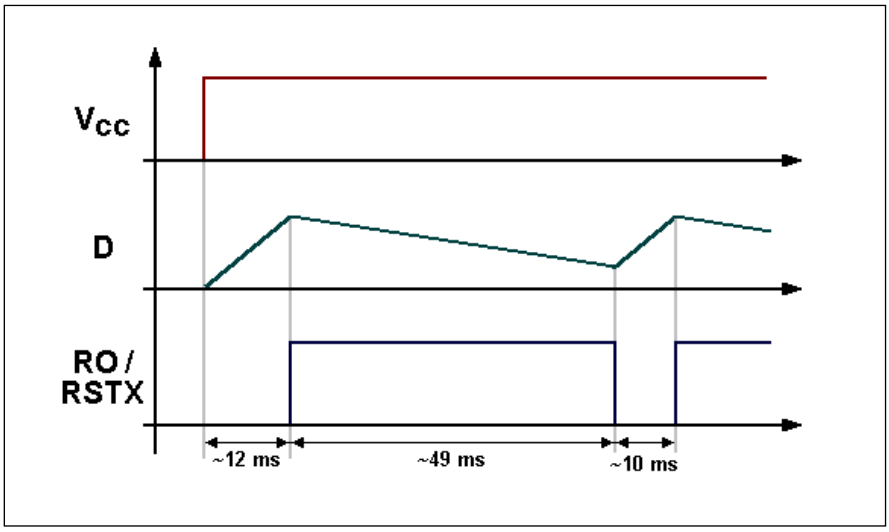

Note: In this case the watch dog is not retriggered, so that the first watchdog reset occurs about 49 ms after the first power on reset.

5.5.2 Timing Diagram of Programming Mode

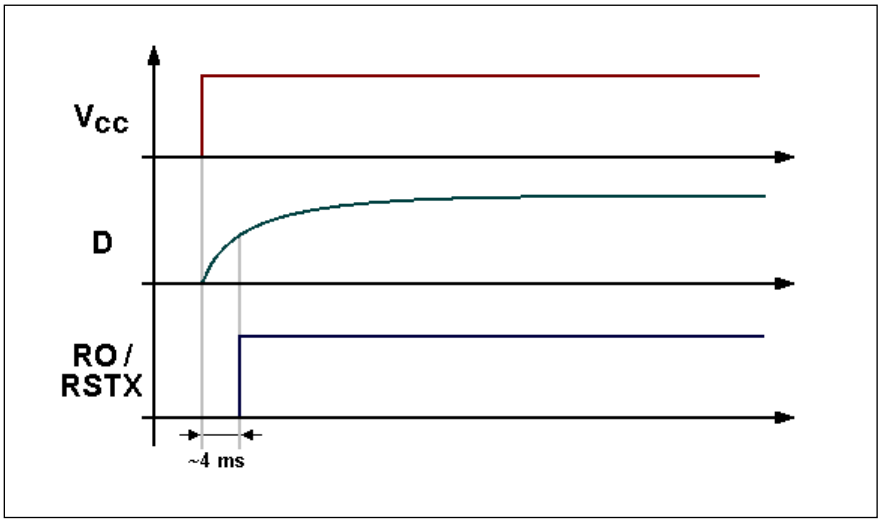

Note: The capacitor on the D-pin now is completely charged to 5 Volts, so that the power on reset time becomes shorter.

A Appendix

Information about Cypress Microcontrollers can be found on the following Internet page:

http://www.cypress.com/cypress-microcontrollers

A.1 Documentation References

Table 2. Documentation References

Ref. #	Document file name	Description
1	FR_Family_FR81S_Series_Emulation_System	MB2100-01-E debug hardware manual (layout design rules included)

Document History

Document Title: AN204876 - F²MC-16FX Family, MB96600 Series Hardware Set Up

Document Number: 002-04876

Revision	ECN	Orig. of Change	Submission Date	Description of Change
**	-	MKEA	01/29/2014	Initial Release
*A	5062257	MKEA	12/24/2015	Migrated Spansion Application Note from MCU-AN-300258-E-V10 to Cypress format
*B	5833873	AESATP12	07/27/2017	Updated logo and copyright.
*C	6038357	NOFL	01/19/2018	Updated logo and links. Updated Sales page and Copyright year.

Worldwide Sales and Design Support

Cypress maintains a worldwide network of offices, solution centers, manufacturer's representatives, and distributors. To find the office closest to you, visit us at Cypress Locations.

Products

Arm® Cortex® Microcontrollers	cypress.com/arm
Automotive	cypress.com/automotive
Clocks & Buffers	cypress.com/clocks
Interface	cypress.com/interface
Internet of Things	cypress.com/iot
Memory	cypress.com/memory
Microcontrollers	cypress.com/mcu
PSoC	cypress.com/psoc
Power Management ICs	cypress.com/pmic
Touch Sensing	cypress.com/touch
USB Controllers	cypress.com/usb
Wireless Connectivity	cypress.com/wireless

PSoC® Solutions

PSoC 1 | PSoC 3 | PSoC 4 | PSoC 5LP | PSoC 6 MCU

Cypress Developer Community

Community | Projects | Videos | Blogs | Training | Components

Technical Support

cypress.com/support

All other trademarks or registered trademarks referenced herein are the property of their respective owners.

Cypress Semiconductor
198 Champion Court
San Jose, CA 95134-1709

© Cypress Semiconductor Corporation, 2014-2018. This document is the property of Cypress Semiconductor Corporation and its subsidiaries, including Spansion LLC ("Cypress"). This document, including any software or firmware included or referenced in this document ("Software"), is owned by Cypress under the intellectual property laws and treaties of the United States and other countries worldwide. Cypress reserves all rights under such laws and treaties and does not, except as specifically stated in this paragraph, grant any license under its patents, copyrights, trademarks, or other intellectual property rights. If the Software is not accompanied by a license agreement and you do not otherwise have a written agreement with Cypress governing the use of the Software, then Cypress hereby grants you a personal, non-exclusive, nontransferable license (without the right to sublicense) (1) under its copyright rights in the Software (a) for Software provided in source code form, to modify and reproduce the Software solely for use with Cypress hardware products, only internally within your organization, and (b) to distribute the Software in binary code form externally to end users (either directly or indirectly through resellers and distributors), solely for use on Cypress hardware product units, and (2) under those claims of Cypress's patents that are infringed by the Software (as provided by Cypress, unmodified) to make, use, distribute, and import the Software solely for use with Cypress hardware products. Any other use, reproduction, modification, translation, or compilation of the Software is prohibited.

TO THE EXTENT PERMITTED BY APPLICABLE LAW, CYPRESS MAKES NO WARRANTY OF ANY KIND, EXPRESS OR IMPLIED, WITH REGARD TO THIS DOCUMENT OR ANY SOFTWARE OR ACCOMPANYING HARDWARE, INCLUDING, BUT NOT LIMITED TO, THE IMPLIED WARRANTIES OF MERCHANTABILITY AND FITNESS FOR A PARTICULAR PURPOSE. No computing device can be absolutely secure. Therefore, despite security measures implemented in Cypress hardware or software products, Cypress does not assume any liability arising out of any security breach, such as unauthorized access to or use of a Cypress product. In addition, the products described in these materials may contain design defects or errors known as errata which may cause the product to deviate from published specifications. To the extent permitted by applicable law, Cypress reserves the right to make changes to this document without further notice. Cypress does not assume any liability arising out of the application or use of any product or circuit described in this document. Any information provided in this document, including any sample design information or programming code, is provided only for reference purposes. It is the responsibility of the user of this document to properly design, program, and test the functionality and safety of any application made of this information and any resulting product. Cypress products are not designed, intended, or authorized for use as critical components in systems designed or intended for the operation of weapons, weapons systems, nuclear installations, life-support devices or systems, other medical devices or systems (including resuscitation equipment and surgical implants), pollution control or hazardous substances management, or other uses where the failure of the device or system could cause personal injury, death, or property damage ("Unintended Uses"). A critical component is any component of a device or system whose failure to perform can be reasonably expected to cause the failure of the device or system, or to affect its safety or effectiveness. Cypress is not liable, in whole or in part, and you shall and hereby do release Cypress from any claim, damage, or other liability arising from or related to all Unintended Uses of Cypress products. You shall indemnify and hold Cypress harmless from and against all claims, costs, damages, and other liabilities, including claims for personal injury or death, arising from or related to any Unintended Uses of Cypress products.

Cypress, the Cypress logo, Spansion, the Spansion logo, and combinations thereof, WICED, PSoC, CapSense, EZ-USB, F-RAM, and Traveo are trademarks or registered trademarks of Cypress in the United States and other countries. For a more complete list of Cypress trademarks, visit cypress.com. Other names and brands may be claimed as property of their respective owners.