AN204778

F²MC-16FX Family, Clock Calibration

This application note describes the functionality of the Clock Calibration function and gives an example

Contents

1 Introduction....1
1.1 Key Features....1
2 Clock Calibration....1
2.1 Functionality....1
2.2 Block Diagram....2
2.3 Timing Diagram....2
2.4 Registers....3
3 Calibration and Measurement....3
3.1 Interpreting Measurement Results....3
3.2 Calibration of the Real Time Clock....3
4 Clock Calibration Examples....4
4.1 Calibration Measurement of the RC or Sub Clock....4
4.2 Calibrating the Real Time Clock....6
4.3 Calibrating the USART....10
5 Additional Information....12
6 Document History....13
Worldwide Sales and Design Support....14
Products....14
PSoC® Solutions....14
Cypress Developer Community....14
Technical Support....14

1 Introduction

This application note describes the functionality of the Clock Calibration function and gives an example.

1.1 Key Features

- Measurement of the following clocks against the Main Clock (CLKMC)
- RC Clock (CLKRC) (100 kHz, 2 MHz)
- Sub Clock (CLKSC)

2 Clock Calibration

The Basic Functionality of the Clock Calibration Function

2.1 Functionality

With the Clock Calibration the RC or Sub Clock oscillation clocks a counter for a given duration value. In this duration time the calibration timer counter is clocked by the Main Clock (CLKMC).

This allows to trim other resources, which have reload counter prescalers (Real Time Clock, USART, etc.).

2.2 Block Diagram

Figure 1. Clock Calibration Block Diagram

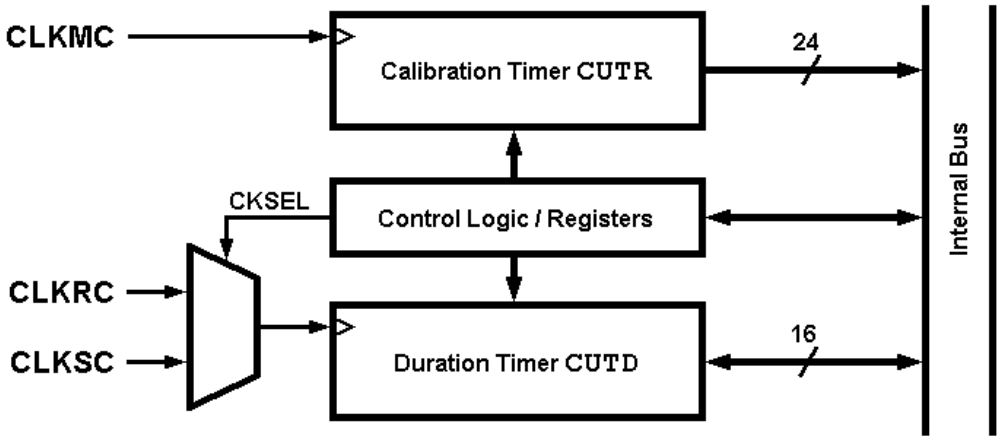

2.3 Timing Diagram

The following timing diagram shows the functionality of the Clock Calibration unit:

Figure 2. Timing Diagram Clock Calibration Unit

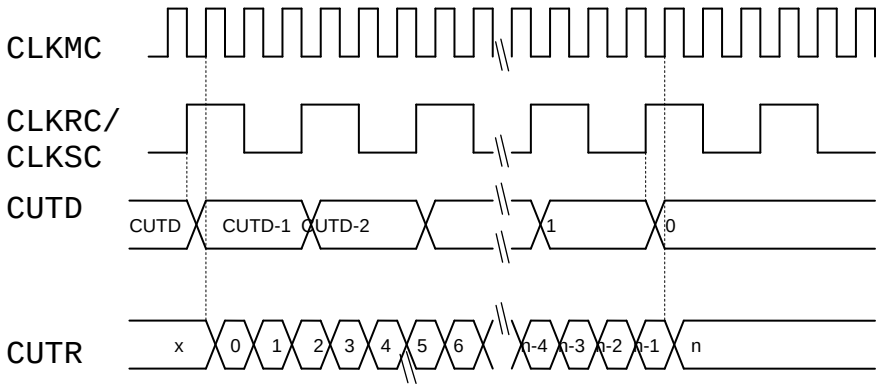

Please note, that the length of the clock pulses are not drawn in a proportional manner.

2.4 Registers

2.4.1 Clock Calibration Unit Control Register (CUCR)

The CUCR consists of the following bits:

Bit No.	Bit Name	Initial Value	Value	Description
7	*Reserved*	X	0	Always write “0” to this bit
6, 5	-	0	-	*Unused bits*
4	STRT	0	0	No Calibration
			1	Start Calibration
3	-	0	-	*Unused bit*
2	CKSEL	0	0	Sub Clock (CLKSC) selected for calibration
			1	RC Clock (CLKRC) selected for calibration
1	INT	0	0	No calibration / Calibration ongoing Write: Clear bit
			1	Calibration finished
0	INTEN	0	0	Interrupt disabled
			1	Interrupt enabled

2.4.2 Clock Calibration Duration Timer Data Register (CUTD)

This 16-bit register contains the duration interval for the duration timer. This timer is clocked by the RC or Sub Clock as selected by CUCR: CKSEL

2.4.3 Clock Calibration Timer Data Register (CUTR)

This 24-bit register is clocked by the Main Clock (CLKMC). Its counting is gated by the duration of the clock to be calibrated.

3 Calibration and Measurement

This Chapter Shows How to Calculate Calibration Data

3.1 Interpreting Measurement Results

Assume the 32.768 kHz sub clock should be measured with an ideal Main Clock of 4MHz. The duration in CUTD was set to a value of 0x2000 = 8192, which should represent 0.25s at an ideal sub clock oscillation.

After measurement, the value of CUTR is e. g. 0x0F4002. What does this mean?

The Calibration Timer has counted to 0x0F4002 = 999426 in the duration time given by the sub clock. This represents (at ideal 4 MHz Main Clock reference) a duration time of 999426 / 4000000 = 0.24986s. Thus the sub clock oscillation is a bit to fast.

3.2 Calibration of the Real Time Clock

Assume the Real Time Clock is clocked by the Sub Clock oscillator with the same frequency deviation given in 3.1.

At an ideal Sub Clock of 32.768 kHz the Sub Second Register (WTBR) would have the reload value 8192 (= 0x2000). Because the oscillation was measured as too fast, the new value can be calculated as:

$$WTBR_{CALIBRATED} = \frac{f_{RTC} \cdot f_{MAIN} \cdot t_{INTERVAL}}{4s^{-1} \cdot CUTR}$$

f_{RTC}: Clock source of Real Time Clock
f_{MAIN}: Main Clock (CLKMC)
$t_{INTERVAL}$: Interval time given by CUTD

With the example values above the calculation is:

$$WTBR_{CALIBRATED} = \frac{32768s^{-1} \cdot 4000000s^{-1} \cdot 0.25s}{4s^{-1} \cdot 999426} = 8196.70$$

The new calibrated Sub Second Register value is then: 8197

4 Clock Calibration Examples

Examples for the Clock Calibration Usage

4.1 Calibration Measurement of the RC or Sub Clock

The following example shows, how to measure the RC or sub clock. No interrupts are used.

Figure 3. Flowchart for Calibration Measurement

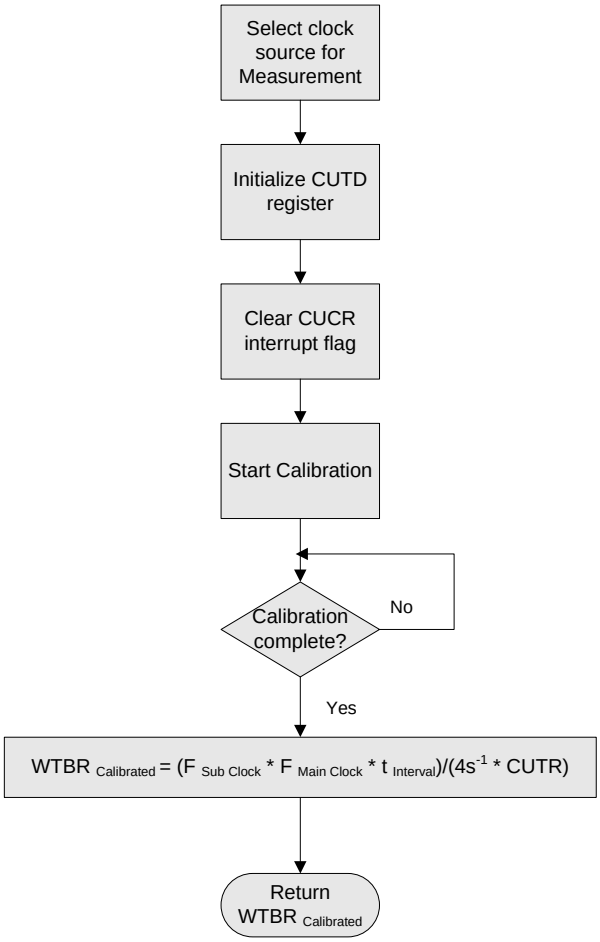

```
/* THIS SAMPLE CODE IS PROVIDED AS IS AND IS SUBJECT TO ALTERATIONS.          */
/* MICROELECTRONICS ACCEPTS NO RESPONSIBILITY OR LIABILITY FOR ANY ERRORS OR */
/* ELIGIBILITY FOR ANY PURPOSES.                                              */
/*----------------------------------------------------------------------------*/

#include "mb96347rw.h"

#define MAIN_CLOCK 4000000              // Main Clock in Hz
#defineSUB_CLOCK 32768                  // Sub Clock in Hz
#define RC_CLOCK 100000                 // RC clock in Hz
#define INTERVAL 0.5                    // Measurement duration in s
#define CUTD_VALUE (INTERVAL * SUB_CLOCK)

unsigned long ClockMeasure(unsigned int duration)
{
   float calibrate;
   unsigned long wtbr_cal2;
      CUCR = 0x00;       // measure sub clock, no interrupts
   //CUCR = 0x04;// measure RC clock, no interrupts

   CUTD =CUTD_VALUE;
   CUCR_INT = 0;
   CUCR_STRT = 1;// start calibration measurement
   while (!CUCR_INT);// wait for end of measurement

   CUCR_INT = 0;     // clear INT flag (is set even if no interrupts used)

   calibrate = 0.5 + (((float) SUB_CLOCK * (float) MAIN_CLOCK
                  * (float) INTERVAL) / ((float) 4 * (float) CUTR));
   wtbr_cal2 = (unsignedlong) calibrate;//0.5 is added for rounding

   return wtbr_cal2;// return measurement value
}
```

4.2 Calibrating the Real Time Clock

The following example shows how to calibrate the Real Time Clock clocked by the 32 kHz Sub Clock.

Figure 4. Flowchart for RTC Calibration

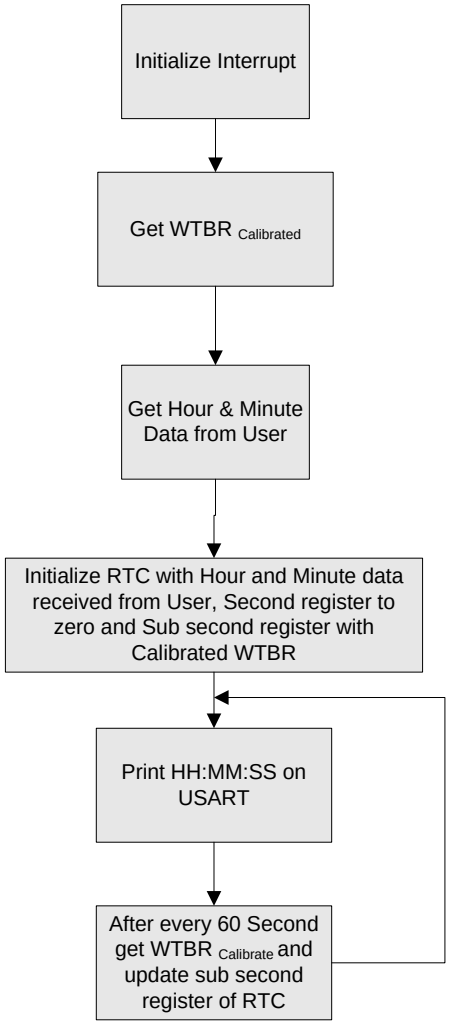

```
/* THIS SAMPLE CODE IS PROVIDED AS IS AND IS SUBJECT TO ALTERATIONS.         */
/* MICROELECTRONICS ACCEPTS NO RESPONSIBILITY OR LIABILITY FOR ANY ERRORS OR */
/* ELIGIBILITY FOR ANY PURPOSES.                                             */
/*---------------------------------------------------------------------------*/

#include "mb96347rw.h"

#define MAIN_CLOCK 4000000           // Main Clock in Hz
#define SUB_CLOCK 32768              // Sub clock in Hz
#define INTERVAL 0.5          // Measurement duration in s
#define CUTD_VALUE (INTERVAL * SUB_CLOCK)
#define CUTR_IDEAL (unsignedlong) (INTERVAL * MAIN_CLOCK)

#define SCT 0x47   // irq all 4s

#define UPDATE_INTERVAL 15 // 4s * 15 = 60s
#define WEIGHT (float)100
#define T_INTERVAL 60

char update_count;
unsignedlong cal;
double dt, w;


void InitRTC(unsignedchar hour, unsignedchar minute, unsignedlong subsecond)
{
    WTCR_ST = 0;       // Stop RTC
    WTCR_INTE0 = 0;    // No Interrupts
    WTCR_INTE1 = 0;
    WTCR_INTE2 = 0;
    WTCR_INTE3 = 0;
    //WTCER_INTE4 = 0;
    WTCR_OE = 1;       // Output

    WTBR0 = (0xFFFF & subsecond);     // Set calibrated prescaler value
    WTBR1 = (subsecond >> 16);
    WTHR = hour;
    WTMR = minute;
    WTSR = 0;
    WTCR_UPDT = 1;     // Update RTC

    while(!SSR0_RDRF); // wait for "RETURN"

    WTCR_ST = 1;       // Start RTC

    (volatile) RDR0;   // Flush RDR0
}

unsignedlong ClockMeasure(unsignedint duration)
{
    float calibrate;
    unsigned long wtbr_cal2;

    CUTD = duration;
    CUCR_INT = 0;
    CUCR_STRT = 1;
    while (!CUCR_INT);

    CUCR_INT = 0;
```

```
        calibrate = 0.5 + (((float) SUB_CLOCK * (float) MAIN_CLOCK
                    * (float) INTERVAL) / ((float) 4 * (float) CUTR));
    wtbr_cal2 = (unsignedlong) calibrate;

    return wtbr_cal2;
}

void InitSCT(void)
{
    SCTCR = SCT;
}

void wait(long a)
{
    long i;

    for (i = 0; i < a; i++)
        __wait_nop();
}

void printdigits(unsignedchar val)
{
    unsignedint val2;

    val2 = val / 10;
    Putch0(val2 + 0x30);

    val = val - (val2 * 10);
    Putch0(val + 0x30);
}

void printtime(void)
{
    printdigits(WTHR);
    Putch0(':');
    printdigits(WTMR);
    Putch0(':');
    printdigits(WTSR);
    Puts0("\n");
}

void main(void)
{
    unsignedchar hh, hl, mh, ml, hour, minute;

    DDR00 = 0xFF;
    PDR00 = 0x01;                           // indicate start

    InitIrqLevels();
    set_il(7);                          // allow all levels
    EI();                               // globally enable interrupts

    w = WEIGHT;
    dt = 0;

    WTCKSR = 0x01;            // Sub clock
    CUCR_CKSEL = 1;           // Sub clock for calibration unit
        cal = ClockMeasure(CUTD_VALUE);

    PDR00 = 0x02;

    InitUart0(416);    // 19200 bps @ 8 MHz

    PDR00 = 0x03;

        Puts0("\nRTC/RC clock self calibration\n");
    Puts0("============================\n");
    Puts0("CUTR: 0x");
```

```
    printlong(CUTR);
    Puts0("\nCUTR: ");
    printdeclong(CUTR);
        Puts0("\nSub Second: 0x");
    printlong(cal);
    Puts0("\nSub Second: ");
    printdeclong(cal);
    Puts0("\n\nEnter Time (HHMM) <RETURN>: ");

    (volatile) RDR0;                          // Flush RDR0
    hh = Getch0();
    Putch0(hh);
    hl = Getch0();
    Putch0(hl);
    mh = Getch0();
    Putch0(mh);
    ml = Getch0();
    Putch0(ml);

    hour = (hl & 0x0F) + 10 * (hh & 0x0F);
    minute = (ml & 0x0F) + 10 * (mh & 0x0F);


        hour = (hl & 0x0F) + 10 * (hh & 0x0F);
    minute = (ml & 0x0F) + 10 * (mh & 0x0F);

    InitRTC(hour, minute, cal);

    InitSCT();

    Puts0("\n");


    while(1)
    {
        printtime();
    }
}
// Recalibration of RTC
__interrupt void ISR_SC(void)
{
    SCTCR = SCT;   // clear irq

    if (update_count >= UPDATE_INTERVAL)
    {
        update_count = 0;

        dt += (((double)CUTR / (MAIN_CLOCK / 2)) * SUB_CLOCK / cal
               / 4 * (double)T_INTERVAL) - (double)T_INTERVAL;

        cal = ClockMeasure(CUTD_VALUE);
        cal += dt * WEIGHT;

        WTCR_INT0 = 0;
        while(!WTCR_INT0);     // wait for second

        WTBR0 = (0xFFFF & cal);       // Set calibrated prescaler value
        WTBR1 = (cal >> 16);
    }

    update_count++;
}
```

4.3 Calibrating the USART

As per RS232 standard, the maximum variance allowed for baud rate is 5%.

As per data sheet, for chip to chip, value of internal RC oscillator may vary from 1 MHz to 4 MHz for CLKRC of 2 MHz or it may vary from 50 kHz to 200 kHz for CLKRC of 100 kHz.

If we assume that CLKRC is operating at typical frequency of 2 MHz and CLKRC is selected as clock source for CLKS1 and intern to CLKP1 than BGRn register value is calculated as follows:

$$BGRn = \left[\frac{CLKRC}{9600} - 1\right]$$

$$\therefore BGRn = \left[\frac{2000000}{9600} - 1\right]$$

$$\therefore BGRn_{Typ} = 207$$

If we set the BGRn equal to 207 and if the actual frequency of CLKRC is 2.5 MHz, then resulting baud rate will be:

$$BaudRate = \left[\frac{CLKRC}{BGRn + 1}\right]$$

$$\therefore BaudRate = \left[\frac{2500000}{207 + 1}\right]$$

$$\therefore BaudRate = 12019$$

This is far beyond the acceptable variance by RS232 standard.

Considering above facts, when CLKRC is selected as clock source for CLKS1 and intern to CLKP1, one can use clock calibration unit to find the actual frequency of CLKRC and can set BGRn register value to match the required baud rate.

Let us consider an example; here we will assume that clock source CLKMC which is input to calibration timer is stable and its frequency is exactly 4 MHz.

Now we know that when we initialize CUTD to 0x0000 and start measurement, and when an underflow occurs, the measurement will take (0xFFFF + 1) *T_{CLKRC} seconds.

Let us assume that for the above measurement CUTR counts up to 0x0019999.

From this information, we can find out value of CLKRC as follows:

$$\frac{CUTD}{CLKRC} = \frac{CUTR}{CLKMC}$$

$$\therefore \frac{65536}{CLKRC} = \frac{104857}{4\ MHz}$$

$$\therefore CLKRC = \frac{65536 * 4\ MHz}{104857}$$

$$\therefore CLKRC = 2.500014\ MHz$$

One point of interest over here is, consider that when CUTD reaches to zero and when STRT is reset indicating end of calibration process, it may happen that Main Clock cycle is already finished 90% of its time and was about to increment CUTR, so CUTR instead of counting 104858 has counted 104857 cycles. (CUTR count is incremented at the end of Main clock cycle).

If we recalculate, using above formula we will get CLKRC as follows:

$$\frac{CUTD}{CLKRC} = \frac{CUTR}{CLKMC}$$
$$\therefore \frac{65536}{CLKRC} = \frac{104858}{4\,MHz}$$
$$\therefore CLKRC = \frac{65536 * 4\,MHz}{104858}$$
$$\therefore CLKRC = 2.499990\,MHz$$

Now from above calculation, as we know the RC clock frequency, let us find out the BGRn register value for baud rate of 9600:

$$BGRn = \left[\frac{CLKRC}{9600} - 1\right]$$
$$\therefore BGRn = \left[\frac{2500014}{9600} - 1\right] \text{ or } BGRn = \left[\frac{2499990}{9600} - 1\right]$$
$$\therefore BGRn = 259 \text{ or } BGRn = 259$$

Let us also do reverse calculation to find out what is exact baud rate if we select BGRn value to 259.

$$BaudRate = \left[\frac{CLKRC}{BGRn + 1}\right]$$
$$\therefore BaudRate = \left[\frac{2500014}{259 + 1}\right] \text{ or } BaudRate = \left[\frac{2499990}{259 + 1}\right]$$
$$\therefore BaudRate = 9615 \text{ or } BaudRate = 9615$$

Here actual baud rate is 0.15% more than the required one, which is within acceptable limits of RS232 Standards.

Also from the above calculation, the error due to one cycle count miss of CUTR will not affect the final baud rate, so one can safely ignore it.

Considering CLKRC may vary from 1 MHz to 4 MHz and the fact that for asynchronous serial communication BGRn must be set equal to or more than four; Maximum and minimum baud rate that can be set is calculated as follows:

$$BaudRate = \left[\frac{CLKRC}{BGRn + 1}\right]$$
$$\therefore BaudRate = \left[\frac{100000}{4 + 1}\right] \text{ or } BaudRate = \left[\frac{4000000}{4 + 1}\right]$$
$$\therefore BaudRate = 200\text{kbps or } BaudRate = 800\text{kbps}$$

So for all practical purpose where CLKRC is not known in advance one can still start with baud rate of 200kbps.

One more fact to be considered while calibrating USART is that CLKRC frequency is a temperature dependent.

5 Additional Information

Information about Cypress Microcontrollers can be found on the following Internet page:

http://www.cypress.com/cypress-microcontrollers

The software examples related to this application note is:

96340_rtc_clkcal_sc_autocorr-v10

It can be found on the following Internet page:

http://www.cypress.com/products/16fx

6 Document History

Document Title: AN204778 - F²MC-16FX Family, Clock Calibration

Document Number: 002-04778

Revision	ECN	Orig. of Change	Submission Date	Description of Change
**	-	MKEA	12/11/2006	Initial Release
			07/22/2007	Updated example software
			09/24/2007	Added USART calibration
			09/27/2007	Updated USART calibration chapter
*A	5060876	MKEA	12/22/2015	Migrated Spansion Application Note from MCU-AN-300229-E-V13 to Cypress format
*B	5836244	AESATMP8	07/28/2017	Updated logo and Copyright.
*C	6036665	NOFL	01/18/2018	Updated logo. Updated links. Updated Sales page and Copyright year.

Worldwide Sales and Design Support

Cypress maintains a worldwide network of offices, solution centers, manufacturer's representatives, and distributors. To find the office closest to you, visit us at Cypress Locations.

Products

Arm® Cortex® Microcontrollers	cypress.com/arm
Automotive	cypress.com/automotive
Clocks & Buffers	cypress.com/clocks
Interface	cypress.com/interface
Internet of Things	cypress.com/iot
Memory	cypress.com/memory
Microcontrollers	cypress.com/mcu
PSoC	cypress.com/psoc
Power Management ICs	cypress.com/pmic
Touch Sensing	cypress.com/touch
USB Controllers	cypress.com/usb
Wireless Connectivity	cypress.com/wireless

PSoC® Solutions

PSoC 1 | PSoC 3 | PSoC 4 | PSoC 5LP | PSoC 6 MCU

Cypress Developer Community

Community | Projects | Videos | Blogs | Training | Components

Technical Support

cypress.com/support

All other trademarks or registered trademarks referenced herein are the property of their respective owners.

Cypress Semiconductor
198 Champion Court
San Jose, CA 95134-1709

© Cypress Semiconductor Corporation, 2006-2018. This document is the property of Cypress Semiconductor Corporation and its subsidiaries, including Spansion LLC ("Cypress"). This document, including any software or firmware included or referenced in this document ("Software"), is owned by Cypress under the intellectual property laws and treaties of the United States and other countries worldwide. Cypress reserves all rights under such laws and treaties and does not, except as specifically stated in this paragraph, grant any license under its patents, copyrights, trademarks, or other intellectual property rights. If the Software is not accompanied by a license agreement and you do not otherwise have a written agreement with Cypress governing the use of the Software, then Cypress hereby grants you a personal, non-exclusive, nontransferable license (without the right to sublicense) (1) under its copyright rights in the Software (a) for Software provided in source code form, to modify and reproduce the Software solely for use with Cypress hardware products, only internally within your organization, and (b) to distribute the Software in binary code form externally to end users (either directly or indirectly through resellers and distributors), solely for use on Cypress hardware product units, and (2) under those claims of Cypress's patents that are infringed by the Software (as provided by Cypress, unmodified) to make, use, distribute, and import the Software solely for use with Cypress hardware products. Any other use, reproduction, modification, translation, or compilation of the Software is prohibited.

TO THE EXTENT PERMITTED BY APPLICABLE LAW, CYPRESS MAKES NO WARRANTY OF ANY KIND, EXPRESS OR IMPLIED, WITH REGARD TO THIS DOCUMENT OR ANY SOFTWARE OR ACCOMPANYING HARDWARE, INCLUDING, BUT NOT LIMITED TO, THE IMPLIED WARRANTIES OF MERCHANTABILITY AND FITNESS FOR A PARTICULAR PURPOSE. No computing device can be absolutely secure. Therefore, despite security measures implemented in Cypress hardware or software products, Cypress does not assume any liability arising out of any security breach, such as unauthorized access to or use of a Cypress product. In addition, the products described in these materials may contain design defects or errors known as errata which may cause the product to deviate from published specifications. To the extent permitted by applicable law, Cypress reserves the right to make changes to this document without further notice. Cypress does not assume any liability arising out of the application or use of any product or circuit described in this document. Any information provided in this document, including any sample design information or programming code, is provided only for reference purposes. It is the responsibility of the user of this document to properly design, program, and test the functionality and safety of any application made of this information and any resulting product. Cypress products are not designed, intended, or authorized for use as critical components in systems designed or intended for the operation of weapons, weapons systems, nuclear installations, life-support devices or systems, other medical devices or systems (including resuscitation equipment and surgical implants), pollution control or hazardous substances management, or other uses where the failure of the device or system could cause personal injury, death, or property damage ("Unintended Uses"). A critical component is any component of a device or system whose failure to perform can be reasonably expected to cause the failure of the device or system, or to affect its safety or effectiveness. Cypress is not liable, in whole or in part, and you shall and hereby do release Cypress from any claim, damage, or other liability arising from or related to all Unintended Uses of Cypress products. You shall indemnify and hold Cypress harmless from and against all claims, costs, damages, and other liabilities, including claims for personal injury or death, arising from or related to any Unintended Uses of Cypress products.

Cypress, the Cypress logo, Spansion, the Spansion logo, and combinations thereof, WICED, PSoC, CapSense, EZ-USB, F-RAM, and Traveo are trademarks or registered trademarks of Cypress in the United States and other countries. For a more complete list of Cypress trademarks, visit cypress.com. Other names and brands may be claimed as property of their respective owners.