The following document contains information on Cypress products. The document has the series name, product name, and ordering part numbering with the prefix “MB”. However, Cypress will offer these products to new and existing customers with the series name, product name, and ordering part number with the prefix “CY”.

How to Check the Ordering Part Number

1. Go to www.cypress.com/pcn.
2. Enter the keyword (for example, ordering part number) in the **SEARCH PCNS** field and click **Apply**.
3. Click the corresponding title from the search results.
4. Download the Affected Parts List file, which has details of all changes

For More Information

Please contact your local sales office for additional information about Cypress products and solutions.

About Cypress

Cypress is the leader in advanced embedded system solutions for the world's most innovative automotive, industrial, smart home appliances, consumer electronics and medical products. Cypress' microcontrollers, analog ICs, wireless and USB-based connectivity solutions and reliable, high-performance memories help engineers design differentiated products and get them to market first. Cypress is committed to providing customers with the best support and development resources on the planet enabling them to disrupt markets by creating new product categories in record time. To learn more, go to www.cypress.com.

AN204734

F²MC-8FX Family MB95200 Series 8-Bit Microcontroller Smoke Detector Demo Reference Solution

Associated Part Family: MB95200 Series

This application note describes the features of a Smoke Detector demo board.

Contents

1 Overview 1
2 Demo Platform 2
2.1 Platform 2
3 Features 3
3.1 High dB Alarm 3
3.2 Powered by Battery 3
3.3 Low Power Consumption 3
4 Functions 4
4.1 Normal State Indication 4
4.2 Self-test Function 4
4.3 Low Battery Output Warning 4
4.4 Automatic Alarm 4
5 Hardware 5
5.1 System Block Diagram 5
5.2 Schematic 6
5.3 Modules 7
6 Firmware 10
6.1 Flow Chart 10
6.2 Project 12
7 Additional Information 13
Document History 14

1 Overview

This Demo board is a smoke detector which is used to detect fire. It is a photoelectric detector that senses the infrared refracted by mote or dust caused by fire. The MCU is Cypress MB95202K from MB95200 series.

This demo set supports the following features:

- High dB alarm
- Powered by battery
- Low power consumption

2 Demo Platform

2.1 Platform

Figure 1 shows the platform of smoke detector. D1 and D2 are alarm LEDs. The key is used for self-test.

Figure 1. Demo Platform

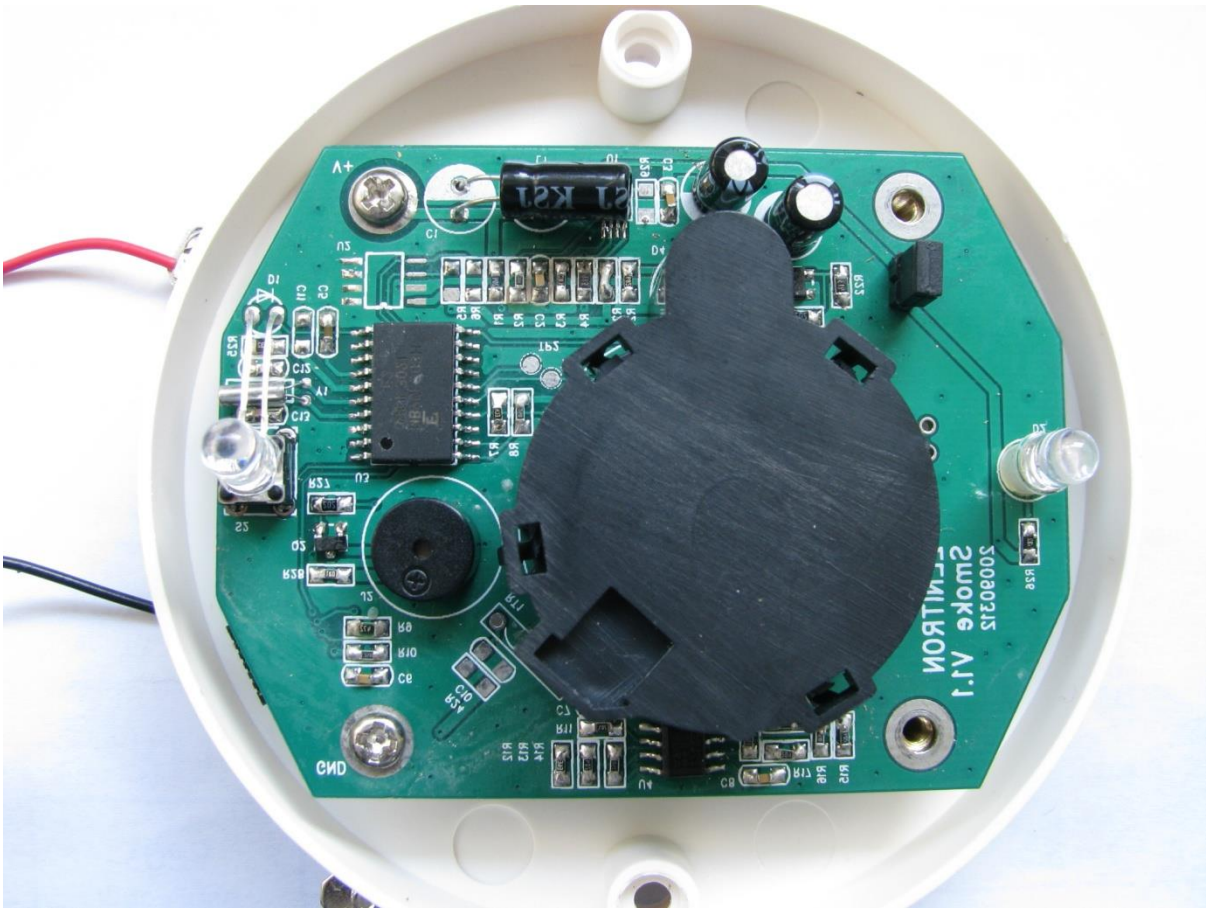

3 Features

3.1 High dB Alarm

The sound is higher than 70 dB in the field of 3 m. When the detector is fixed lower than 5 m above the floor, it can cover 60 m^2.

3.2 Powered by Battery

The detector is battery powered equipment. Two 5# batteries can drive it. It runs at 1.8 V to 3.3 V DC voltage.

3.3 Low Power Consumption

In battery powered system, the power consumption is a key parameter. There is a table below to illuminate the main current consumptions.

Table 1. Current Consumption

Test Condition	DC to DC	Amplifier	MCU	Others	Total
3 V	65 mA (EMH7600)	20 mA	10 mA	5 mA	100 mA*3 V=300 mW

In 3 V condition, the total current is 100 mA. If it is powered by two 5# batteries which have a capacity of 2300 mAh, the batteries can last 958 days which is calculated by this formula:

(2300 mAh*1000) / (100 mA*24 h) = 958,

Of course this is an ideal data. The actual time will be shorter. The designer can reduce the power consumption by using low power consumption ICs, reducing the system leak current, and using more prefect firmware and so on.

4 Functions

4.1 Normal State Indication

When power is on, D1 and D2 will flash for one time to indicate that the demo works normally.

4.2 Self-test Function

In order to test the demo, we can press the key. The buzzer will sound periodically when the key is continuously pressed. That means the detector is in normal state.

4.3 Low Battery Output Warning

In this demo set, the DC-DC converter has battery capacity monitor function which can supply a signal to the MCU to warn low battery output. When low battery output occurs, the buzzer will sound and the LEDs will flash at the same time.

4.4 Automatic Alarm

The detector senses the refracted light that reflects the thickness of mote or dust. Stronger light means more mote or dust, and also means high risk of fire. When the thickness of the mote or dust rises up to a threshold, the red fire-alarm light will flash first, then buzzer will sound for 11s later.

5 Hardware

5.1 System Block Diagram

The demo system contains the following elements as shown in Figure 2.

- MCU
- DC/DC boost converter
- IR receiver and amplifier circuit
- IR LED driver
- EEPROM
- Buzzer
- Temperature sensor

Figure 2. System Block Diagram

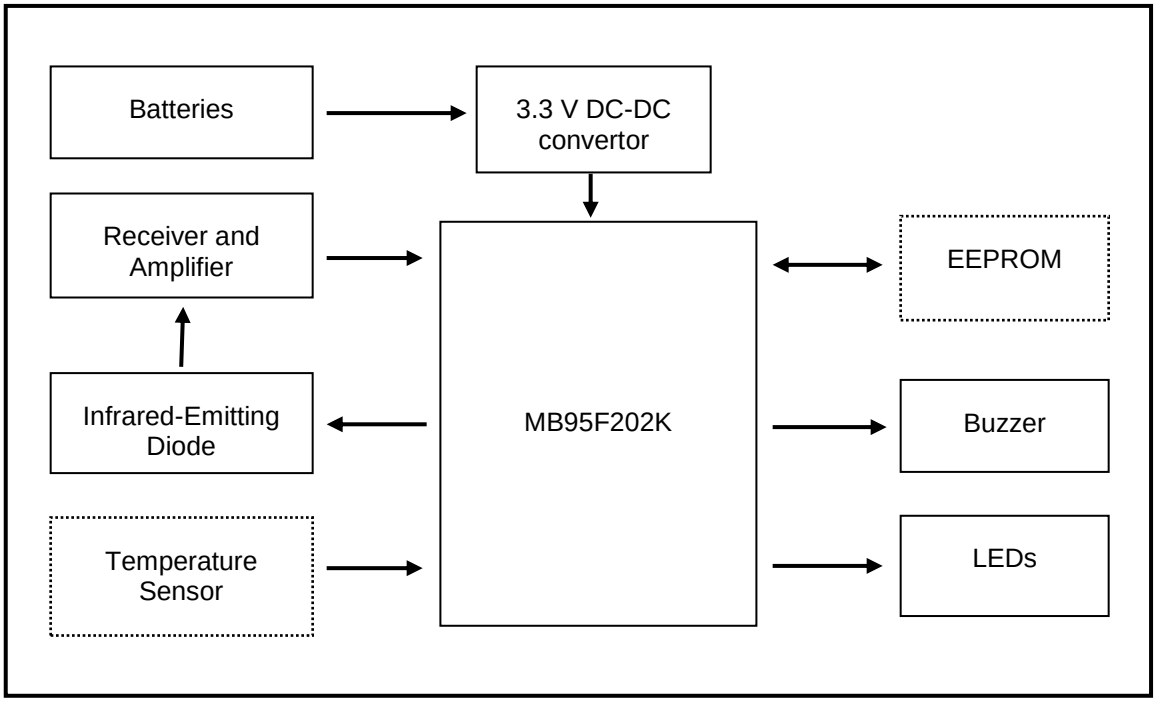

5.2 Schematic

This schematic is a full version, and the temperature and EEPROM are alterable devices.

Figure 3 shows the schematic.

Figure 3. Smoke Detector

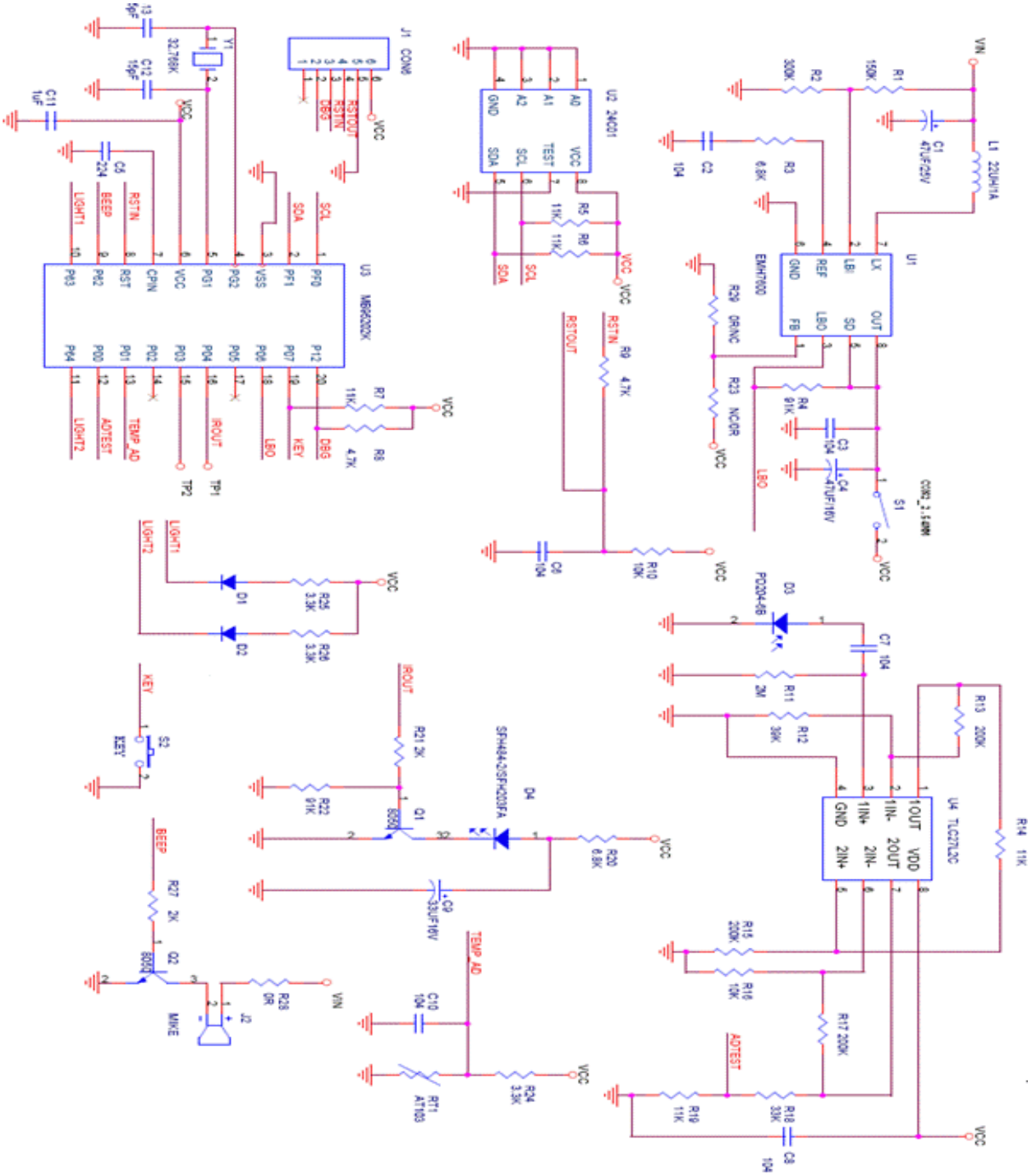

5.3 Modules

Some main modules will be introduced in this section.

■ MCU

In this demo, the MCU is MB95F202K from Cypress excellent MB95200 series. It has following main features:

- 4 KB FLASH, 240 bytes RAM
- 4 clock resources: main OSC, sub OSC, main CR, sub CR.
- 2 channels of 8/16bits timer
- LIN module supporting main and slave mode
- 6 channels for 8/10bit A/D
- LVD

So, this MCU is absolutely competent in this system. The peripheral circuit is like Figure 4.

Figure 4. MCU

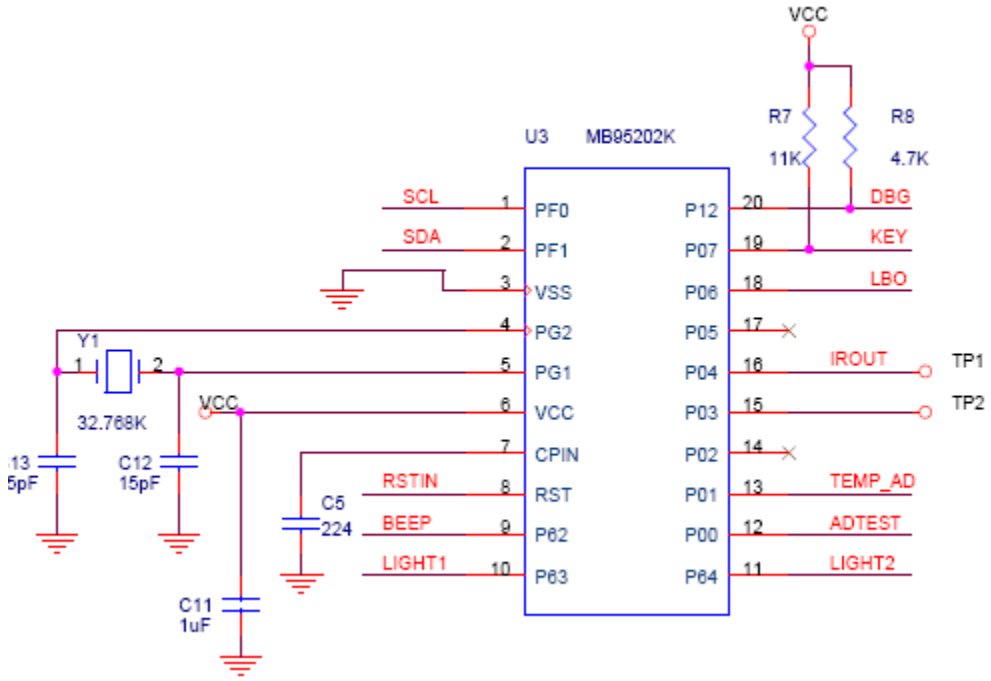

Table 2 shows the pin assignment.

Table 2. Pin Assignment

Number	Pin	Function
1	PF0	EEPROM clock
2	PF1	EEPROM data
8	RST	REST input
9	P62	Buzzer
10	P63	LED D1
11	P64	LED D2
12	P00	Voltage input transformed from reflected infrared current
13	P01	Temperature input
16	P04	Infrared output
18	P06	Monitor the battery capacity
19	P07	Key input
20	P12	One line debug

- DC-DC Boost Converter

The DC-DC boost converter is used to fix the power output at 3.3 V when the battery voltage is lower than 3V. In this design, we select EMH7600 which is a boost converter with 0.3 V – 6 V input and 3.3 V output. The output current is up to 500 mA. About this part, the efficiency has to be considered. Low efficiency will bring huge power consumption.

This IC has a battery capacity monitoring function which is useful here. The pin LBI is battery comparator input and LBO is the output. When the voltage on LBI is lower than 1.195 V, the LBO will switch to low from high level.

Figure 5 gives the DC-DC circuit.

Figure 5. DC-DC

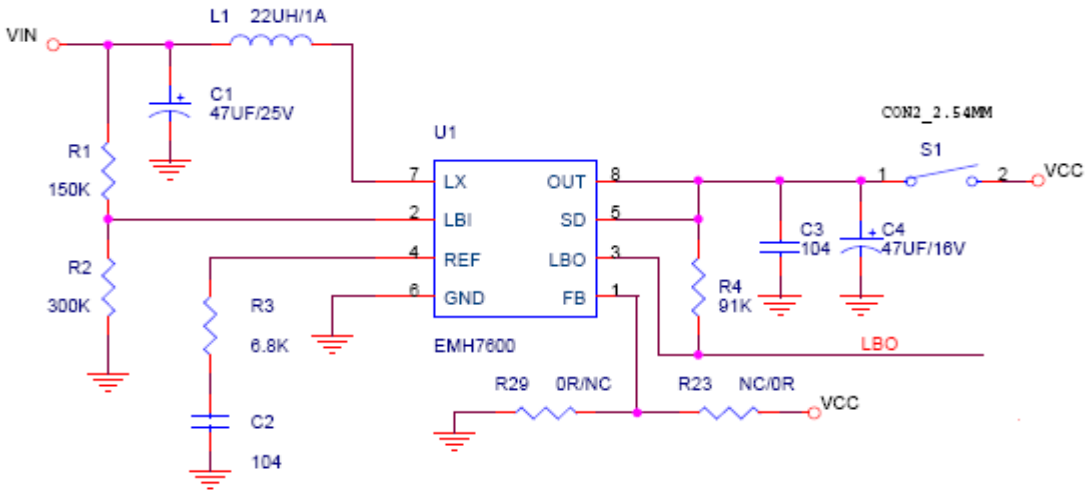

- IR Receiver and Amplifier Circuit

This demo is a photoelectric detector which contains an IR-emitted diode and an IR-received diode. The IR-received diode is fixed in a dark cavity. Amplifiers circuit is needed here to magnify the signal for the following AD stage. The current was transformed to voltage before the amplifier. The amplifier circuit contains two stage amplifiers with total plus of 50 times. PD204-6B is IR receiver.

Figure 6. Amplifier Circuit

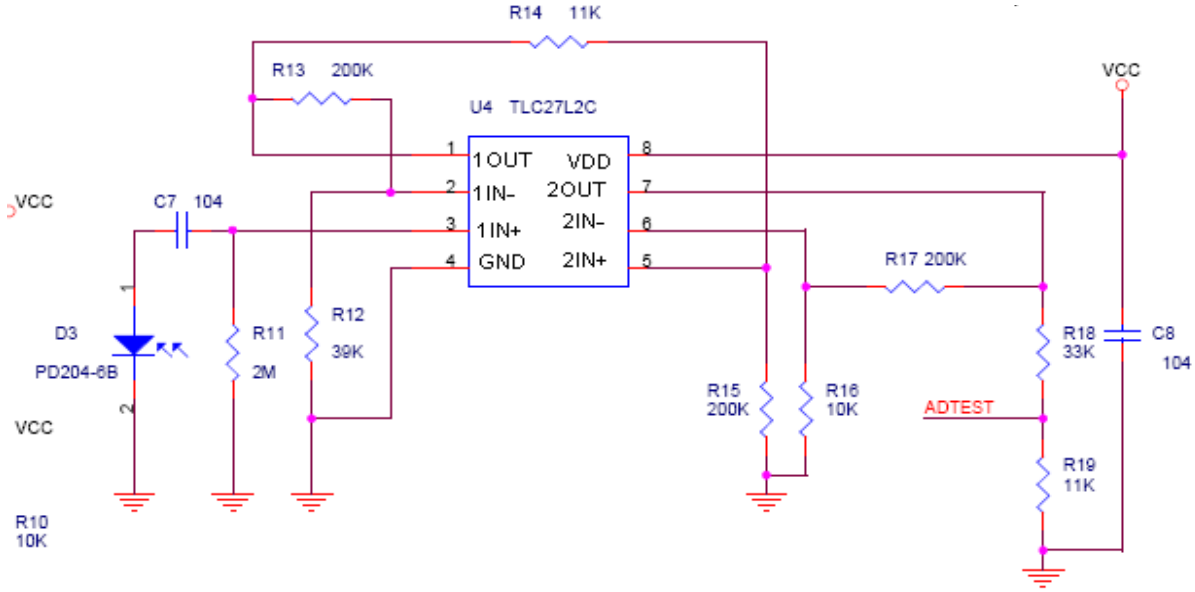

- IR Emitter Circuit

Actually IR emitter is an IR emitting diode. It is driven by a dynatron. Figure 7 shows the circuit.

Figure 7. IR Emitter

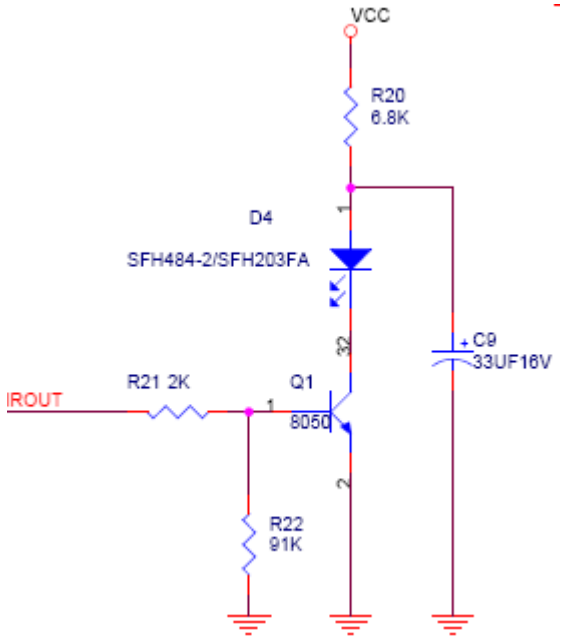

6 Firmware

As many battery powered systems, to reduce power consumption from firmware side is as important as hardware side. Sleeping with periodical wake-up is a widely used method to reduce the power consumption, so does this demo.

6.1 Flow Chart

6.1.1 Main Function

The Low power modes are set in the main function. The MCU can enter SLEEP or STOP mode according to the key and alarm state.

Figure 8 illuminates the main function.

Figure 8. Main Function

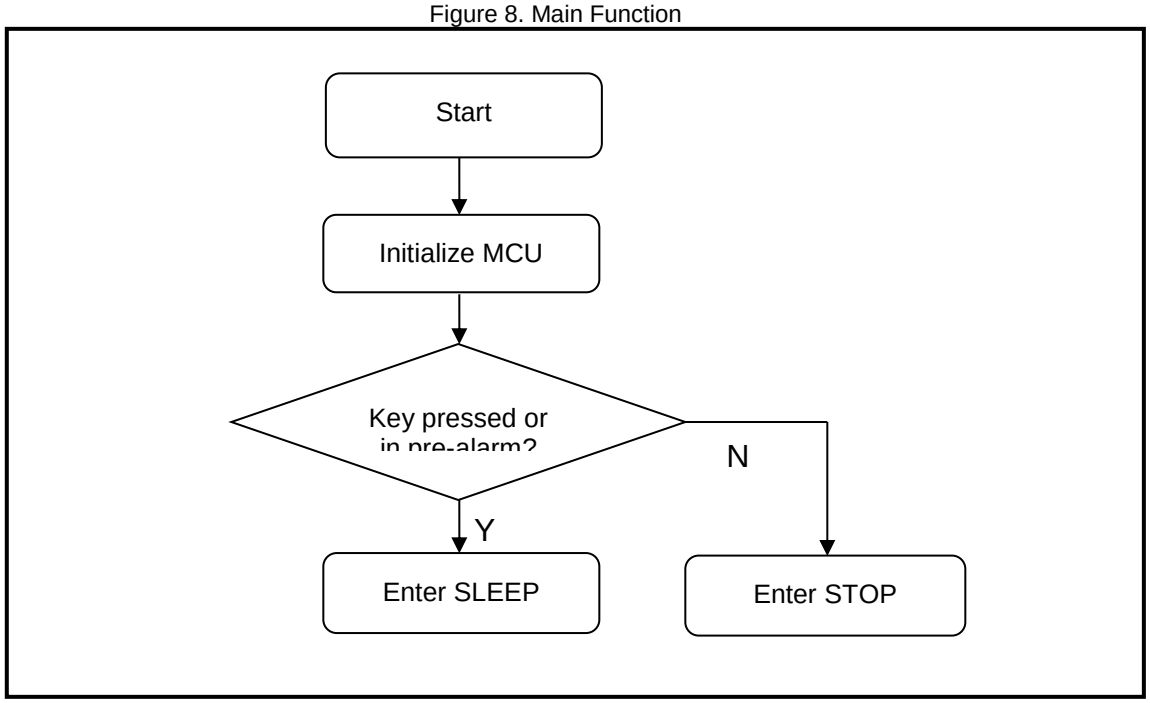

6.1.2 Watch Timer ISR

Usually, the MCU will be waked up by watch timer interrupt one time in every 4s. MCU will give a plus to the infrared LED, and samples the voltage input at the same time when it is waked up. If it is the first time that the A/D value is greater than the threshold, the wake-up interval will be set to 1s and start a counter.

Figure 9 illuminates the watch timer ISR (see next page)

Figure 9. Watch Timer ISR

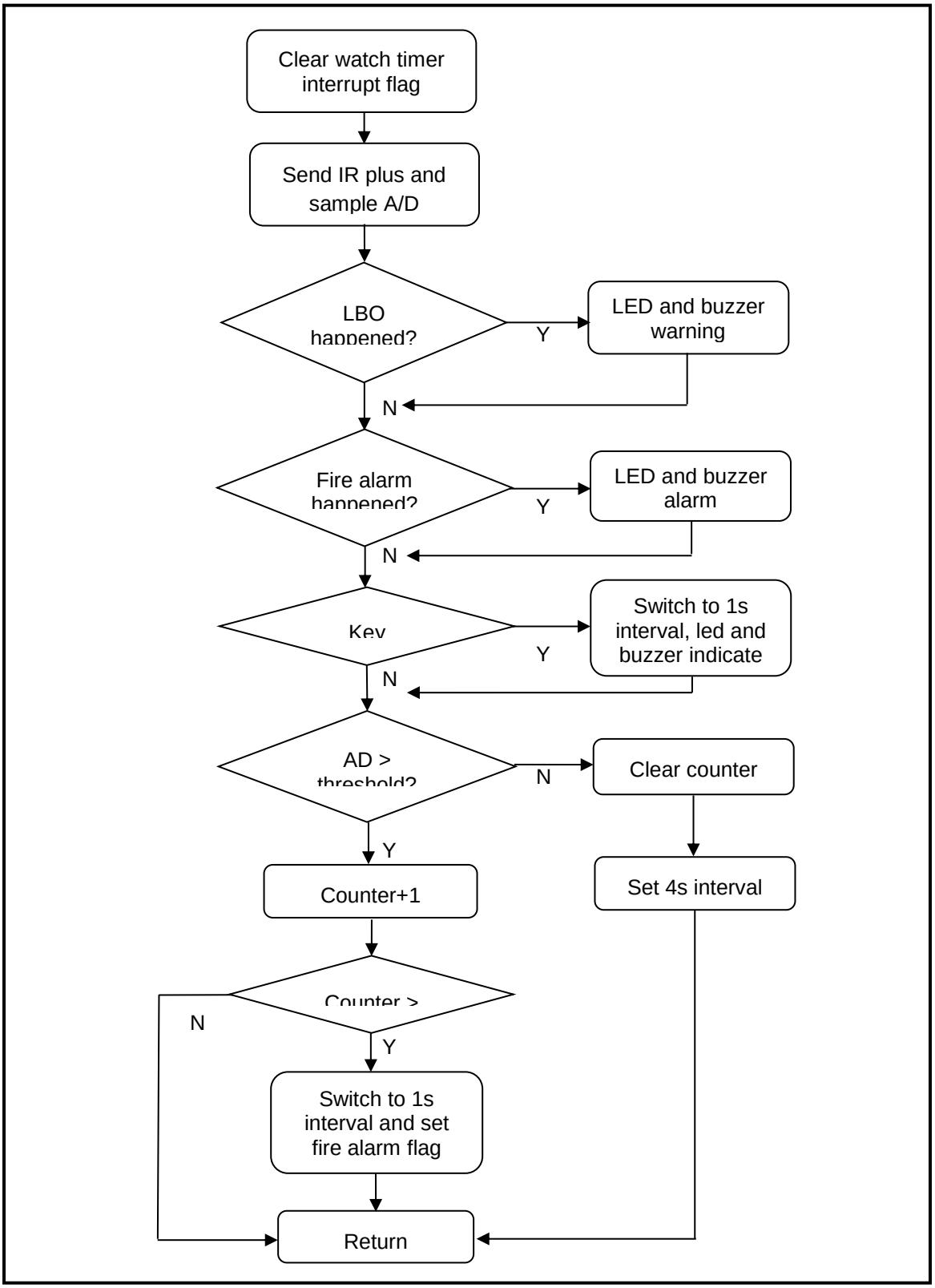

NOTE: LBO means low battery output.

6.2 Project

In this project, all functions and definitions can be found in main.c. The others are files supplied by Cypress. Mb95200.asm is a memory definition. startup.c is start file. vectors.c is a vector definition.

Figure 10. Project

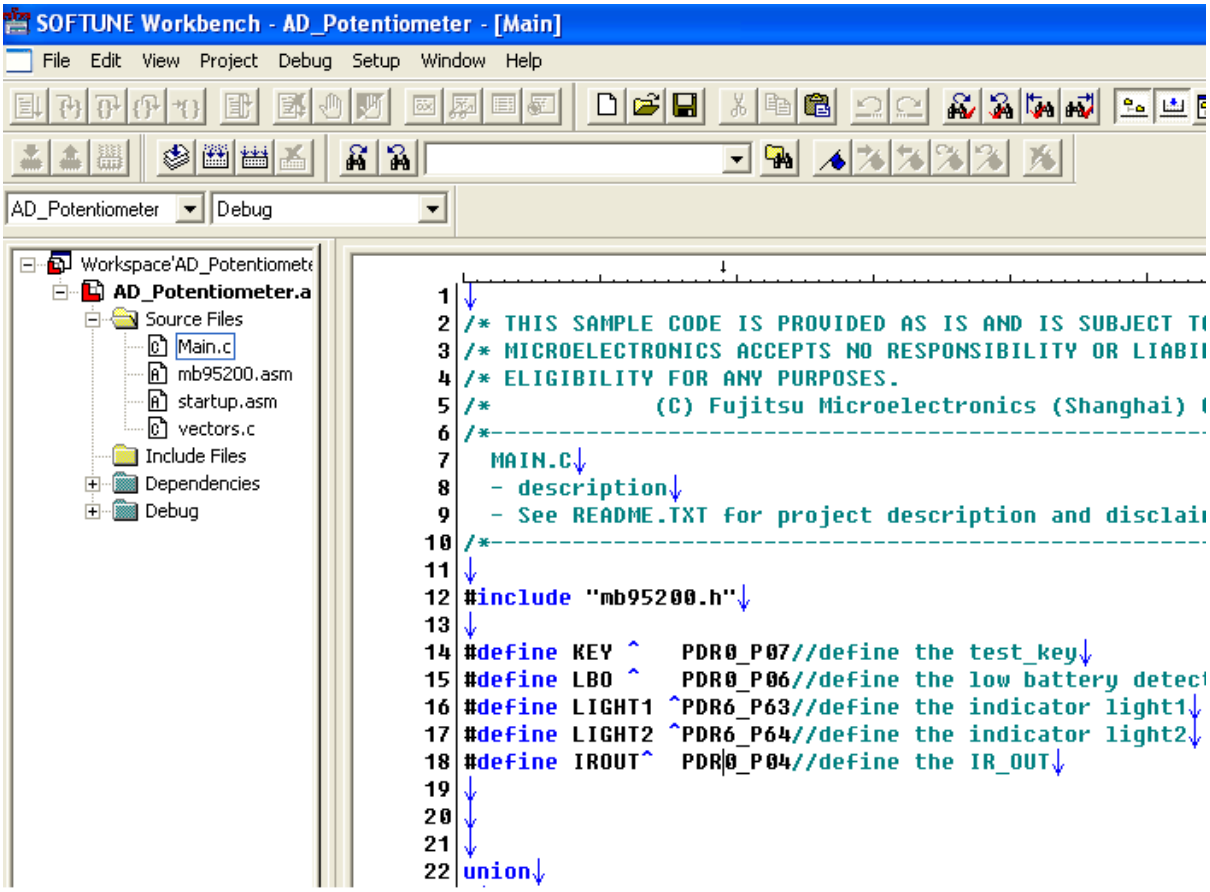

7 Additional Information

For more information on Cypress MB95200 products, please visit following website:

http://www.cypress.com/MB95200

Document History

Document Title: AN204734 – F²MC-8FX Family MB95200 Series 8-Bit Microcontroller Smoke Detector Demo Reference Solution

Document Number: 002-04734

Revision	ECN	Orig. of Change	Submission Date	Description of Change
**	-	HUAL	11/04/2009	Initial release
*A	5250250	HUAL	05/18/2016	Migrated Spansion Application Note MCU-AN- 500054-E-10 to Cypress format.
*B	5844486	MALI	08/04/2017	Updated logo and copyright

Worldwide Sales and Design Support

Cypress maintains a worldwide network of offices, solution centers, manufacturer's representatives, and distributors. To find the office closest to you, visit us at Cypress Locations.

Products

ARM® Cortex® Microcontrollers	cypress.com/arm
Automotive	cypress.com/automotive
Clocks & Buffers	cypress.com/clocks
Interface	cypress.com/interface
Internet of Things	cypress.com/iot
Memory	cypress.com/memory
Microcontrollers	cypress.com/mcu
PSoC	cypress.com/psoc
Power Management ICs	cypress.com/pmic
Touch Sensing	cypress.com/touch
USB Controllers	cypress.com/usb
Wireless Connectivity	cypress.com/wireless

PSoC® Solutions

PSoC 1 | PSoC 3 | PSoC 4 | PSoC 5LP | PSoC 6

Cypress Developer Community

Forums | WICED IOT Forums | Projects | Videos | Blogs | Training | Components

Technical Support

cypress.com/support

All other trademarks or registered trademarks referenced herein are the property of their respective owners.

Cypress Semiconductor
198 Champion Court
San Jose, CA 95134-1709

© Cypress Semiconductor Corporation, 2009-2017. This document is the property of Cypress Semiconductor Corporation and its subsidiaries, including Spansion LLC ("Cypress"). This document, including any software or firmware included or referenced in this document ("Software"), is owned by Cypress under the intellectual property laws and treaties of the United States and other countries worldwide. Cypress reserves all rights under such laws and treaties and does not, except as specifically stated in this paragraph, grant any license under its patents, copyrights, trademarks, or other intellectual property rights. If the Software is not accompanied by a license agreement and you do not otherwise have a written agreement with Cypress governing the use of the Software, then Cypress hereby grants you a personal, non-exclusive, nontransferable license (without the right to sublicense) (1) under its copyright rights in the Software (a) for Software provided in source code form, to modify and reproduce the Software solely for use with Cypress hardware products, only internally within your organization, and (b) to distribute the Software in binary code form externally to end users (either directly or indirectly through resellers and distributors), solely for use on Cypress hardware product units, and (2) under those claims of Cypress's patents that are infringed by the Software (as provided by Cypress, unmodified) to make, use, distribute, and import the Software solely for use with Cypress hardware products. Any other use, reproduction, modification, translation, or compilation of the Software is prohibited.

TO THE EXTENT PERMITTED BY APPLICABLE LAW, CYPRESS MAKES NO WARRANTY OF ANY KIND, EXPRESS OR IMPLIED, WITH REGARD TO THIS DOCUMENT OR ANY SOFTWARE OR ACCOMPANYING HARDWARE, INCLUDING, BUT NOT LIMITED TO, THE IMPLIED WARRANTIES OF MERCHANTABILITY AND FITNESS FOR A PARTICULAR PURPOSE. To the extent permitted by applicable law, Cypress reserves the right to make changes to this document without further notice. Cypress does not assume any liability arising out of the application or use of any product or circuit described in this document. Any information provided in this document, including any sample design information or programming code, is provided only for reference purposes. It is the responsibility of the user of this document to properly design, program, and test the functionality and safety of any application made of this information and any resulting product. Cypress products are not designed, intended, or authorized for use as critical components in systems designed or intended for the operation of weapons, weapons systems, nuclear installations, life-support devices or systems, other medical devices or systems (including resuscitation equipment and surgical implants), pollution control or hazardous substances management, or other uses where the failure of the device or system could cause personal injury, death, or property damage ("Unintended Uses"). A critical component is any component of a device or system whose failure to perform can be reasonably expected to cause the failure of the device or system, or to affect its safety or effectiveness. Cypress is not liable, in whole or in part, and you shall and hereby do release Cypress from any claim, damage, or other liability arising from or related to all Unintended Uses of Cypress products. You shall indemnify and hold Cypress harmless from and against all claims, costs, damages, and other liabilities, including claims for personal injury or death, arising from or related to any Unintended Uses of Cypress products.

Cypress, the Cypress logo, Spansion, the Spansion logo, and combinations thereof, WICED, PSoC, CapSense, EZ-USB, F-RAM, and Traveo are trademarks or registered trademarks of Cypress in the United States and other countries. For a more complete list of Cypress trademarks, visit cypress.com. Other names and brands may be claimed as property of their respective owners.