The following document contains information on Cypress products. The document has the series name, product name, and ordering part numbering with the prefix “MB”. However, Cypress will offer these products to new and existing customers with the series name, product name, and ordering part number with the prefix “CY”.

How to Check the Ordering Part Number

1. Go to www.cypress.com/pcn.
2. Enter the keyword (for example, ordering part number) in the **SEARCH PCNS** field and click **Apply**.
3. Click the corresponding title from the search results.
4. Download the Affected Parts List file, which has details of all changes

For More Information

Please contact your local sales office for additional information about Cypress products and solutions.

About Cypress

Cypress is the leader in advanced embedded system solutions for the world's most innovative automotive, industrial, smart home appliances, consumer electronics and medical products. Cypress' microcontrollers, analog ICs, wireless and USB-based connectivity solutions and reliable, high-performance memories help engineers design differentiated products and get them to market first. Cypress is committed to providing customers with the best support and development resources on the planet enabling them to disrupt markets by creating new product categories in record time. To learn more, go to www.cypress.com.

AN204732

F²MC-8FX Family MB95200 Series 8-Bit Microcontroller PC Fan Demo Reference Solution

Associated Part Family: MB95200 Series

This application note describes the elements and features of the PC Fan demo.

Contents

1 Overview 1
2 Demo Platform....2
2.1 Platform....2
3 Features 3
3.1 12 V and 5 V Power Supply 3
3.2 Hall Sensor Feedback....3
3.3 External PWM Input to Set Speed 3
4 Hardware....4
4.1 System Block Diagram....4
4.2 Modules 4
5 Firmware 7
5.1 Flow Chart 7
5.2 Module Initialization 8
6 Additional Information....10
Document History....11

1 Overview

This Demo set controls a one-pair-pole BLDC with one HALL sensor. This is for PC FAN application.

This demo set contains the following elements:

- Control board based on MB95F264K
- External PWM generating board
- PC FAN

This demo set supports features below:

- 12 V and 5 V power supply
- One Hall sensor feedback
- External PWM input to set speed

2 Demo Platform

2.1 Platform

As shown in Figure 1, there are three parts for this demo, and in fact part Ⅰ is used for external PWM input. It is not necessary in actual application. Part Ⅱ is a drive board which contains an H bridge and a feedback circuit.

Figure 1. Demo Platform

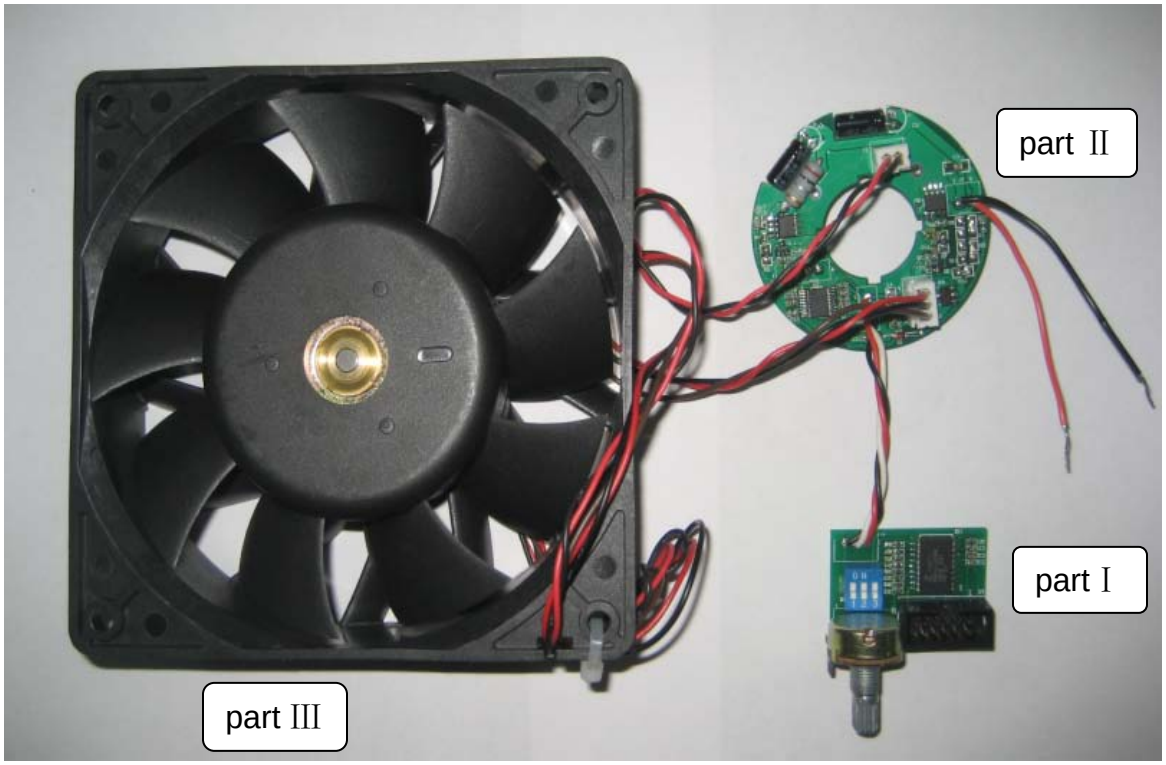

3 Features

3.1 12 V and 5 V Power Supply

In this system, the main power is 12 V and will supply to BLDC and 5 V power. The MCU and Hall sensor will work under 5 V.

3.2 Hall Sensor Feedback

The motor is a one-pair-pole motor so it is embedded only one Hall sensor to sense the phase and measure speed. When the rotor passes through the windings in the stator, the Hall sensor will produce a high-to-low or a low-to-high edge. This edge gives the controller phase information. The time between two edges gives the controller speed information.

3.3 External PWM Input to Set Speed

User can set the speed by inputting a PWM to the control board. The frequency is acceptable from 1 KHZ to 32 KHZ. The control board will measure the duty of the PWM. High duty is corresponding to a high speed, and low duty is corresponding to a low speed.

4 Hardware

4.1 System Block Diagram

Figure 2 shows the main parts of this demo set. They are:

- MCU
- External PWM Input
- H bridge
- 12 V to 5 V convertor

Figure 2. System Block Diagram

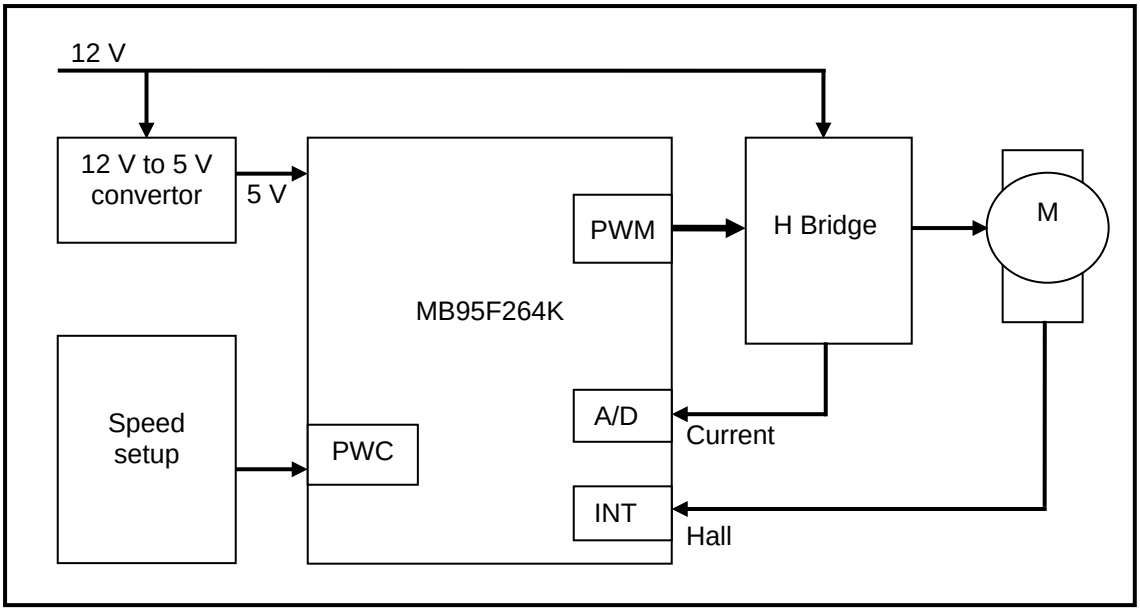

4.2 Modules

Some main modules will be introduced in this section.

- **MCU**

In this demo, the MCU is MB95F264K from Fujitsu excellent MB95200 series. It contains main features as follow:

- 4 K bytes FLASH, 240 bytes RAM
- 4 clock resources: main OSC, sub OSC, main CR, sub CR.
- 2 channels of 8/16bits timer
- LIN module supporting main and slave mode
- 6 channels for 8/10bit A/D
- LVD

The peripheral circuit is given by Figure 3 (next page).

Figure 3. MCU

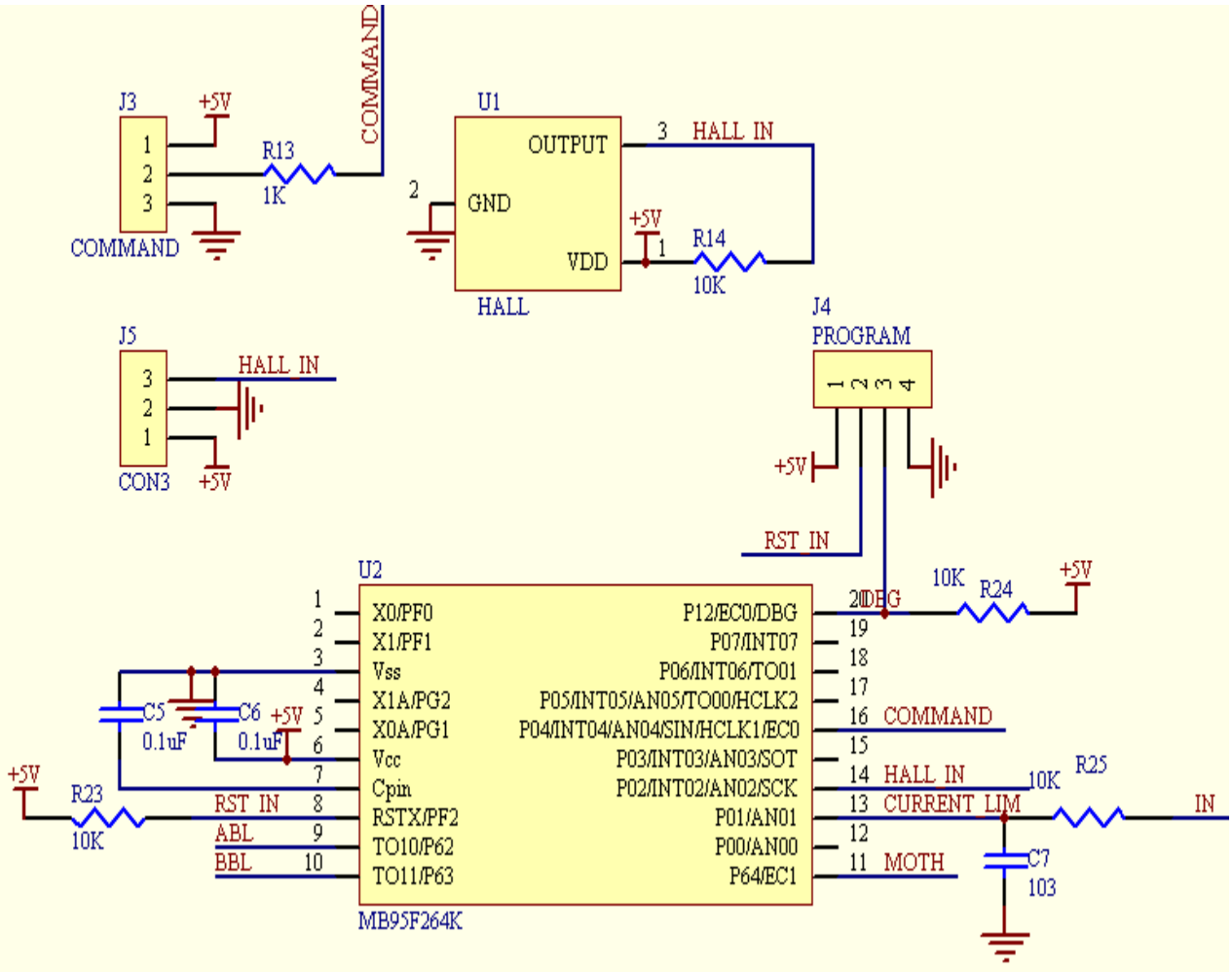

■ H Bridge

As shown in Figure 4, the power amplifier is an H bridge. The mother line voltage is 12 V which is the rated voltage of the motor. H Bridge is made up of four MOSFETs, the high side MOSFETs are P channel, and the low side MOSFETs are N channel. Two dynatrons are used to pull up the G pole voltage to shut down the P MOSFETs. The two dynatrons are controlled by only one MCU pin connected to different pin of dynatrons. When the MCU pin is set to 1, the QA_P1 will be off and the QB_P1 will be on, contrarily, the QA_P1 will be on, the QB_P1 will be off. Two different MCU pins control the N MOSFETs. Current protection is implemented via monitoring the voltage on R18.

Figure 4. H Bridge

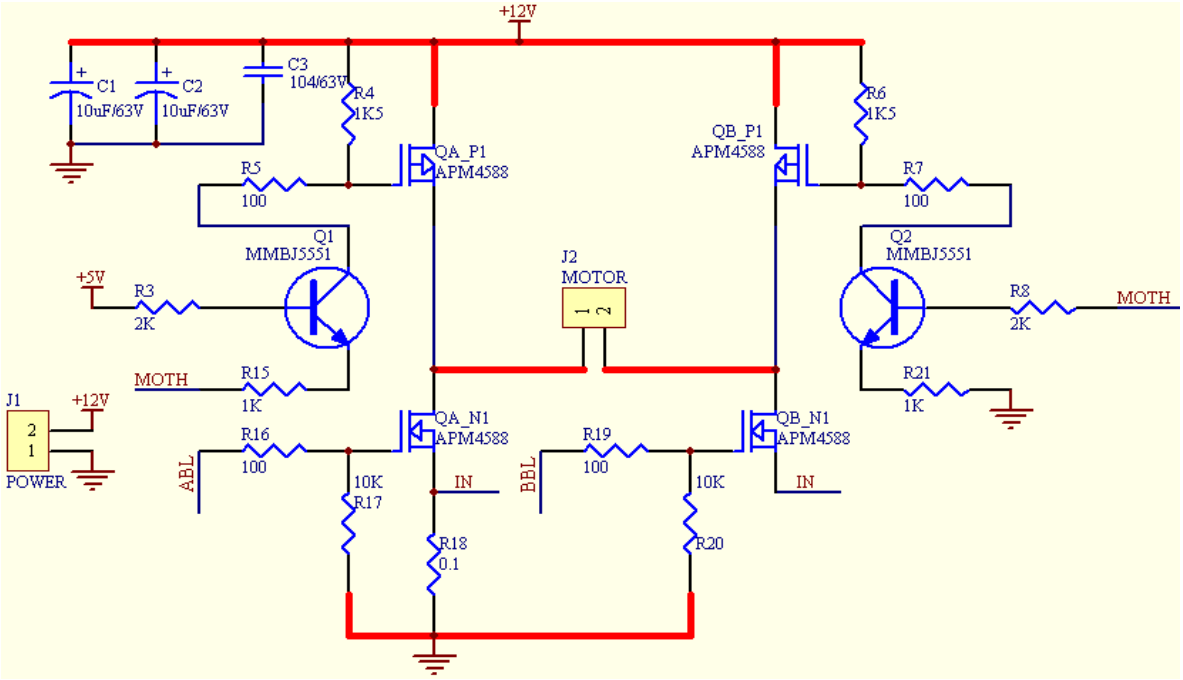

■ 12 V to 5 V converter

The power input on this demo is 12 V. But the MCU and Hall sensor work under 5 V. This circuit can convert 12 V to 5 V for MCU and Hall sensor. The D1 supplies a stable voltage to the base pole of Q3. The connecting pole will output a stable voltage at about 4.3 V (5 V - 0.7 V).

Figure 5. 12 V to 5 V Converter

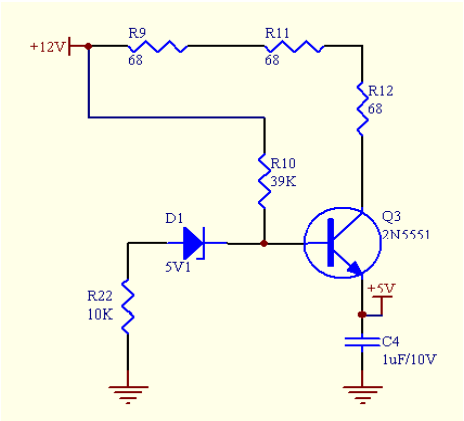

5 Firmware

5.1 Flow Chart

This firmware will mainly implement 4 functions: set speed, produce PWM, get and deal with Hall signal, monitor current. When power on, the speed is not measured at the beginning, so the firmware will check the logic level of the PWM input pin to decide the start speed till the given speed was measured. The total current passing through the motor will be detected all the time.

Figure 6. Flow Chart

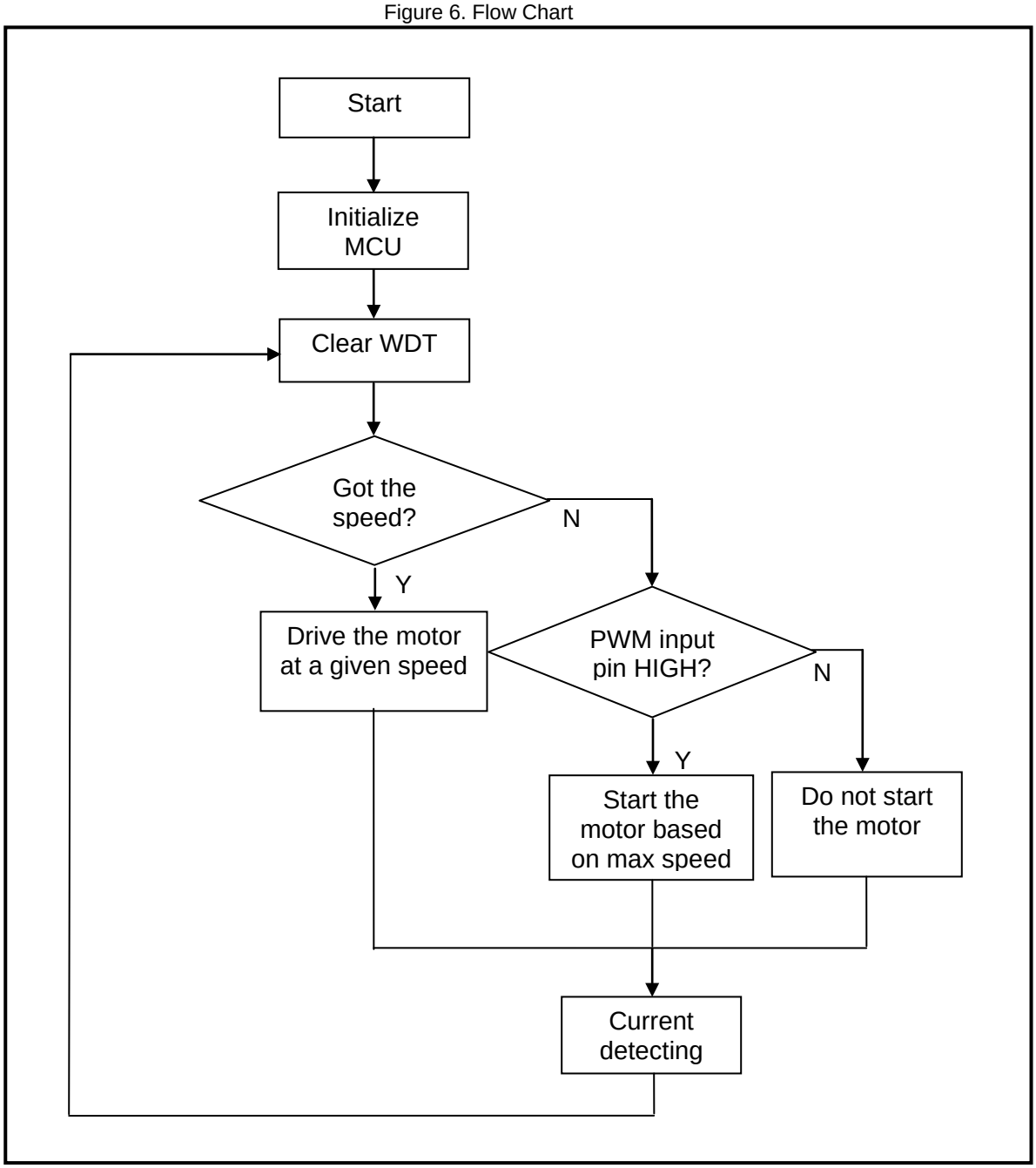

5.2 Module Initialization

The MB95F264K have four 8 bit timers. The timer T00 is used to measure the PWM input signal and get the speed setup. The timer T10 and T11 work at PWM mode to produce PWM to drive the low side mosfets. The timer T01 is used for Hall sensor detecting.

- Set Speed

The fan speed setup is implemented by external PWM input. The frequency is acceptable from 1 KHZ to 32 KHZ. The duty of the PWM is giving speed information. High duty means a high speed, while low duty means low speed. Here, PWC module is used to get external PWM and measure the frequency and duty.

Following is the sample code for PWC.

```
T00CR0 = 10100101B;

TMCR0 = 00000000B;

T00CR1 = 10100000B;
```

- Produce PWM

When the MCU gets given speed information, the PWM module will give PWM signals to the N mosfets according to the Hall sensor feedback. The P mosfets will act according to the Hall sensor signal too. Figure 7 illuminates the flow.

Figure 7. Drive Signals

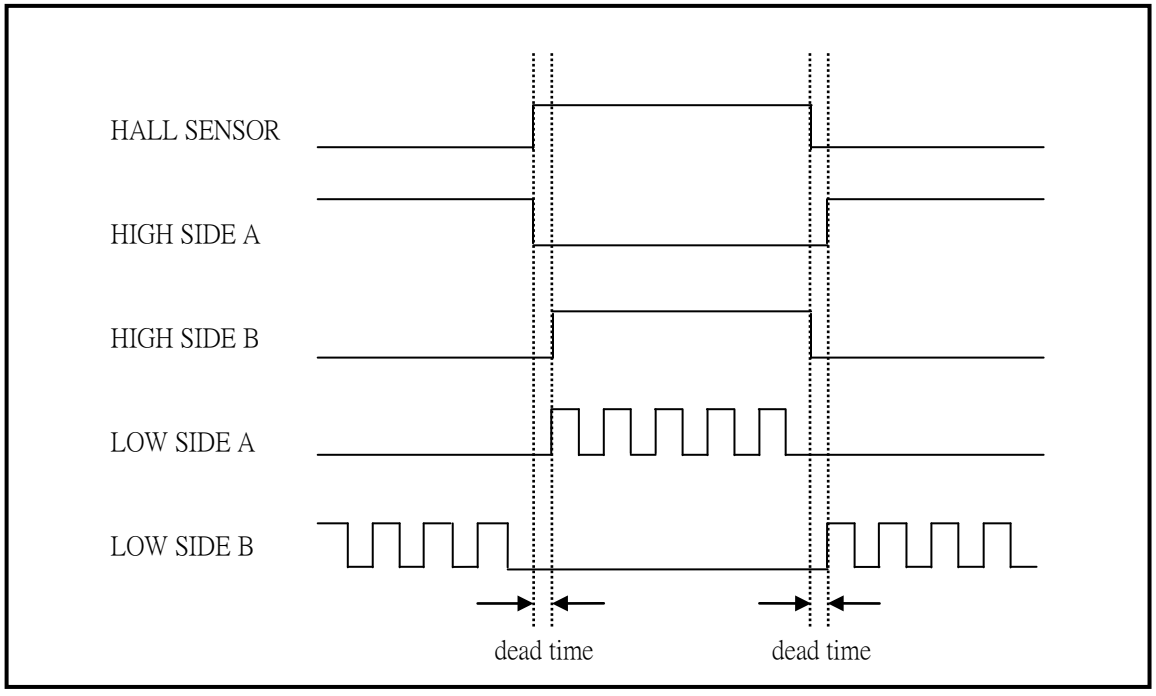

The sample setup is given below.

T10CR0 = 00010011B;

T11CR0 = 00010011B;

TMCR1 = 00100000B;

T10CR1 = 10000001B;

T11CR1 = 10000001B;

- Get and Deal with Hall Sensor Feedback

Hall sensor is a way for communication between controller and motor. The signal transmits the rotor location to the controller. Controller gives signals to drive the H bridge according to the Hall sensor feedback. Firmware arranges a free running timer to detect the Hall sensor signal status at a period of 52.1us.

This is timer setup for hall sensor.

T01CR0 = 10010010B;

TMCR0 = 00000000B;

T01CR1 = 00100000B;

- Monitor Current

In this system, an A/D channel is directly connected to the sampling resistance to sample the voltage transformed from the current. Once huge current is detected, motor will stop to avoid destroying.

AD setup for current monitoring

ADC1 = 00000011B;

ADC2 = 01100011B;

6 Additional Information

For more information on Cypress MB95200 products, please visit following website:

http://www.cypress.com/MB95200

Document History

Document Title: AN204732 – F²MC-8FX Family MB95200 Series 8-Bit Microcontroller PC Fan Demo Reference Solution

Document Number: 002-04732

Revision	ECN	Orig. of Change	Submission Date	Description of Change
**	-	HUAL	11/04/2009	Initial release
*A	5275959	HUAL	05/18/2016	Migrated Spansion Application Note MCU-AN- 500053-E-10 to Cypress format.

Worldwide Sales and Design Support

Cypress maintains a worldwide network of offices, solution centers, manufacturer's representatives, and distributors. To find the office closest to you, visit us at Cypress Locations.

Products

ARM® Cortex® Microcontrollers	cypress.com/arm
Automotive	cypress.com/automotive
Clocks & Buffers	cypress.com/clocks
Interface	cypress.com/interface
Lighting & Power Control	cypress.com/powerpsoc
Memory	cypress.com/memory
PSoC	cypress.com/psoc
Touch Sensing	cypress.com/touch
USB Controllers	cypress.com/usb
Wireless/RF	cypress.com/wireless

PSoC® Solutions

PSoC 1 | PSoC 3 | PSoC 4 | PSoC 5LP

Cypress Developer Community

Forums | Projects | Videos | Blogs | Training | Components

Technical Support

cypress.com/support

PSoC is a registered trademark and PSoC Creator is a trademark of Cypress Semiconductor Corporation. All other trademarks or registered trademarks referenced herein are the property of their respective owners.

Cypress Semiconductor
198 Champion Court
San Jose, CA 95134-1709

Phone : 408-943-2600
Fax : 408-943-4730
Website : www.cypress.com

© Cypress Semiconductor Corporation, 2009-2016. This document is the property of Cypress Semiconductor Corporation and its subsidiaries, including Spansion LLC ("Cypress"). This document, including any software or firmware included or referenced in this document ("Software"), is owned by Cypress under the intellectual property laws and treaties of the United States and other countries worldwide. Cypress reserves all rights under such laws and treaties and does not, except as specifically stated in this paragraph, grant any license under its patents, copyrights, trademarks, or other intellectual property rights. If the Software is not accompanied by a license agreement and you do not otherwise have a written agreement with Cypress governing the use of the Software, then Cypress hereby grants you a personal, non-exclusive, nontransferable license (without the right to sublicense) (1) under its copyright rights in the Software (a) for Software provided in source code form, to modify and reproduce the Software solely for use with Cypress hardware products, only internally within your organization, and (b) to distribute the Software in binary code form externally to end users (either directly or indirectly through resellers and distributors), solely for use on Cypress hardware product units, and (2) under those claims of Cypress's patents that are infringed by the Software (as provided by Cypress, unmodified) to make, use, distribute, and import the Software solely for use with Cypress hardware products. Any other use, reproduction, modification, translation, or compilation of the Software is prohibited.
TO THE EXTENT PERMITTED BY APPLICABLE LAW, CYPRESS MAKES NO WARRANTY OF ANY KIND, EXPRESS OR IMPLIED, WITH REGARD TO THIS DOCUMENT OR ANY SOFTWARE OR ACCOMPANYING HARDWARE, INCLUDING, BUT NOT LIMITED TO, THE IMPLIED WARRANTIES OF MERCHANTABILITY AND FITNESS FOR A PARTICULAR PURPOSE. To the extent permitted by applicable law, Cypress reserves the right to make changes to this document without further notice. Cypress does not assume any liability arising out of the application or use of any product or circuit described in this document. Any information provided in this document, including any sample design information or programming code, is provided only for reference purposes. It is the responsibility of the user of this document to properly design, program, and test the functionality and safety of any application made of this information and any resulting product. Cypress products are not designed, intended, or authorized for use as critical components in systems designed or intended for the operation of weapons, weapons systems, nuclear installations, life-support devices or systems, other medical devices or systems (including resuscitation equipment and surgical implants), pollution control or hazardous substances management, or other uses where the failure of the device or system could cause personal injury, death, or property damage ("Unintended Uses"). A critical component is any component of a device or system whose failure to perform can be reasonably expected to cause the failure of the device or system, or to affect its safety or effectiveness. Cypress is not liable, in whole or in part, and you shall and hereby do release Cypress from any claim, damage, or other liability arising from or related to all Unintended Uses of Cypress products. You shall indemnify and hold Cypress harmless from and against all claims, costs, damages, and other liabilities, including claims for personal injury or death, arising from or related to any Unintended Uses of Cypress products.
Cypress, the Cypress logo, Spansion, the Spansion logo, and combinations thereof, PSoC, CapSense, EZ-USB, F-RAM, and Traveo are trademarks or registered trademarks of Cypress in the United States and other countries. For a more complete list of Cypress trademarks, visit cypress.com. Other names and brands may be claimed as property of their respective owners.