AN204389

FM0+Family 3-Phase ACIM Scalar Control

Associated Part Family: FM0+Family

This document describes the scalar control of a 3-phase squirrel cage induction motor.

Contents

1 Introduction....1
1.1 Purpose....1
1.2 Definitions, Acronyms and Abbreviations....1
2 Induction Motor Theory....2
2.1 Motor Category....2
2.2 Phasor Model of an Induction Motor....2
3 Scalar Control of Induction Motor....5
3.1 Scalar Control of Induction Motor....5
3.2 Speed Open Loop V/f Control....5
3.3 Speed Close Loop Constant Slip Control....7
3.4 Field Weakening Control....9
3.5 Braking Control....10
4 Construct a Scalar Control System....11
5 Summary....11
6 Additional Information....12
7 Reference Documents....12
Document History....13

1 Introduction

1.1 Purpose

This document describes the scalar control of a 3-phase squirrel cage induction motor. Firstly, the phasor model of an induction motor is introduced. Based on the scalar model of motor, different prototypes of scalar control schemes are followed.

1.2 Definitions, Acronyms and Abbreviations

ACIM	AC Induction Motor
SVPWM	Space Vector Pulse Width Modulation
V/f	Voltage per Hertz
FOC	Field Oriented Control
DTC	Direct Torque Control
MTPA	Maximum Torque per Ampere

2 Induction Motor Theory

2.1 Motor Category

Induction motor, also known as asynchronous motor, is further divided by different stator or rotor types. According to the stator structure, there are single phase, two-phase (symmetrical or asymmetrical), and three-phase induction motors. In another hand, the rotor of an induction motor could be equipped with wounded windings or squirrel cage windings, named squirrel cage induction motor and wound rotor induction motor, respectively.

In this document, a three-phase squirrel cage induction motor is described.

Figure 1. Motor Category

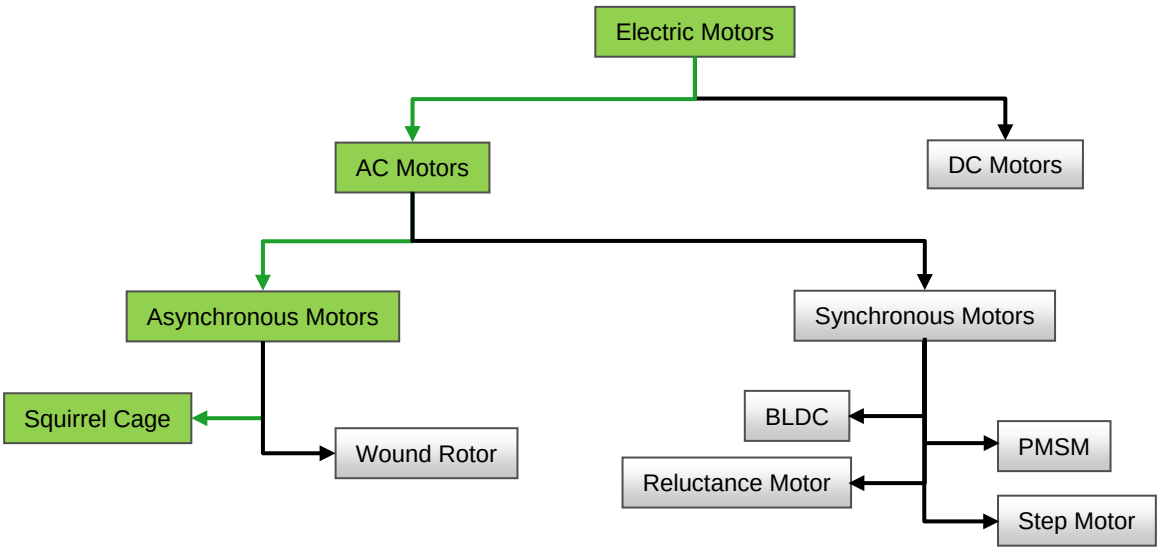

2.2 Phasor Model of an Induction Motor

The phasor model of an induction motor considering the steady state of motor variables is widely cited in *scalar control* method. Before deriving motor model, a few assumptions are made that: (a) stator windings are identical and sinusoidal distributed, (b) linear magnetic system.

The voltage equations with respect to machine variables may be expressed as

$$\boldsymbol{V_s} = R_s\boldsymbol{I_s} + j\omega_e\boldsymbol{\lambda_s} \quad (2\text{-}1)$$

$$0 = R_r\boldsymbol{I_r} + j\omega_s\boldsymbol{\lambda_r} \quad (2\text{-}2)$$

Where $\boldsymbol{V_s}$ is stator voltage phasor, $\boldsymbol{I_s}$ is stator current phasor, $\boldsymbol{\lambda_s}$ is stator flux linkage phasor, $\boldsymbol{I_r}$ is rotor current phasor, and $\boldsymbol{\lambda_r}$ is rotor flux linkage phasor. And ω_e is synchronous speed, ω_r is rotor electrical speed, and $\omega_s = \omega_e - \omega_r$ is slip speed.

For a magnetic linear system, flux linkage phasor is

$$\boldsymbol{\lambda_s} = L_s\boldsymbol{I_s} + L_M\boldsymbol{I_r} \quad (2\text{-}3)$$

$$\boldsymbol{\lambda_r} = L_M\boldsymbol{I_s} + L_r\boldsymbol{I_r} \quad (2\text{-}4)$$

In above equations, R_s is stator resistance, R_r is rotor resistance, L_M is mutual inductance, L_s is stator self-inductance, and L_r is rotor self-inductance.

Figure 2 shows the phase equivalent circuit of an induction motor. The notation $L_{ls} = L_s - L_M$ is stator leakage inductance, $L_{lr} = L_r - L_M$ is rotor leakage inductance, and $s = \omega_s/\omega_e$ is slip rate.

Figure 2. Phase Equivalent Circuit of Induction Motor

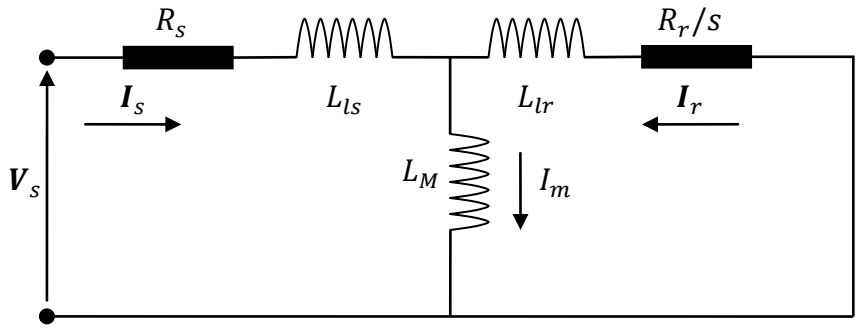

According to equation (2-1) ~ (2-4), stator voltage and current are related as

$$\boldsymbol{V_s} = \left(R_s + \frac{\omega_s \omega_e L_M^2 R_r}{R_r^2 + (\omega_s L_r)^2}\right)\boldsymbol{I_s} + j\frac{L_s R_r^2 + \omega_s^2 (L_s L_r^2 - L_r L_M^2)}{R_r^2 + (\omega_s L_r)^2}\omega_e \boldsymbol{I_s} \quad (2\text{-}5)$$

And stator flux linkage is written as

$$\boldsymbol{\lambda_s} = \frac{L_s R_r + \omega_s^2 (L_s L_r^2 - L_r L_M^2) - j\omega_s R_r L_M^2}{R_r^2 + (L_r \omega_s)^2}\boldsymbol{I_s} \quad (2\text{-}6)$$

Figure 3 depicts the phasor map of motor variables when an induction motor operates in motor modes.

Figure 3. Phasor Map of Motor Variables

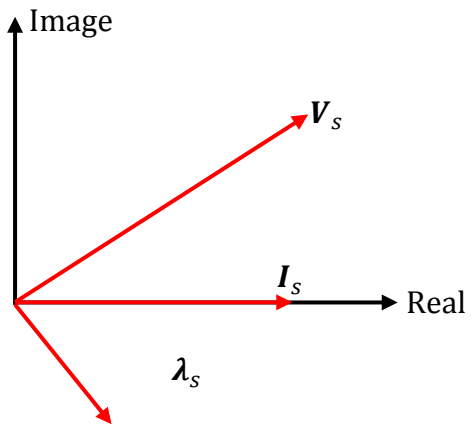

To describe a P pole-pair induction motor, the generated toque may be expressed with respect to current and voltage as equation **(2-7)** and **(2-8)** show.

$$T_e = \frac{3P}{2} \cdot \frac{L_M^2 R_r \omega_s}{R_r^2 + L_r^2 \omega_s^2} |\boldsymbol{I_s}|^2 \quad (2\text{-}7)$$

$$T_e = \frac{3P}{2} \cdot \frac{L_M^2 R_r \omega_s}{\left[R_s R_r + \omega_s \omega_e \left(L_M^2 - L_s L_r\right)\right]^2 + \left[R_r \omega_e L_s + R_s \omega_s L_r\right]^2} |\boldsymbol{V_s}|^2 \quad (2\text{-}8)$$

Where |·| indicates the magnitude of a phasor. Further ignoring the stator resistance, equation **(2-8)** is simplified as

$$T_e = \frac{3P}{2} \cdot \frac{L_M^2 R_r \omega_s}{\omega_s^2 \left(L_M^2 - L_s L_r\right)^2 + R_r^2 L_s^2} \left|\frac{\boldsymbol{V_s}}{\omega_e}\right|^2 \quad (2\text{-}9)$$

Figure 4 shows the torque-speed curve of a typical induction motor where a certain stator voltage is synchronous speed. It can be seen that the electrical torque is a function of the slip speed, and normally motor operates in the green shadowed region with small slip.

Figure 4. Torque-Speed Curve of a Typical Induction Motor

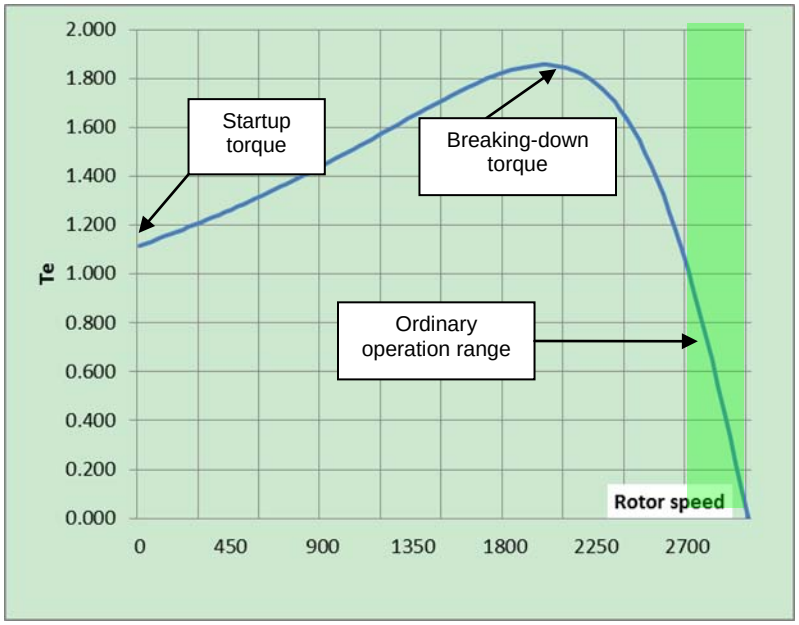

3 Scalar Control of Induction Motor

3.1 Scalar Control of Induction Motor

The controlling of an induction motor mainly consists two categories:

1. Scalar control

   Scalar control is a sort of steady state control method, which ignores electric-magnetic dynamics and assumes stationary current and voltage.

   The most widely implemented scalar control schemes are V/f control and slip control.

2. Vector control

   Different from scalar control, vector control also controls motor dynamics. Based on the state space motor model, field oriented control (FOC) and direct torque control (DTC) are widely applied. In this section, the scalar control of induction motor is introduced, and both speed open loop and close loop control are conveyed.

3.2 Speed Open Loop V/f Control

3.2.1 Constant V/f Control Theory

Constant V/f control is the simplest and least expensive scheme of driving an induction motor, and it is designed based on two observations:

1. The torque-speed characteristic is steep in normal operation region, and the rotor speed is near to the synchronous speed. Therefore, the rotor speed is approximately controlled by controlling the synchronous speed.
2. According to voltage equation **(2-1**), and ignoring voltage drop on stator resistance, flux linkage is proportional to V/f ratio. To avoid magnetic saturation and optimally utilize stator and rotor core, a constant flux level should be maintained. This suggests a constant V/f ratio should be imposed.

Figure 5. Stator Voltage versus Synchronous Speed with Constant V/f Control

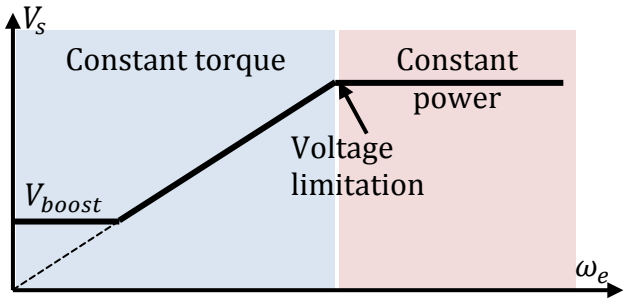

Figure 5 shows the stator voltage as function of synchronous speed in constant V/f control scheme. A boost voltage is added in low speed region when take reckon of voltage drop on resistance term. Depending on the specific system, the boost voltage could be designed differently to meet system requirement.

3.2.2 Constant V/f Control Structure

Figure 6 shows the block diagram of constant V/f control implemented in speed open loop control. The black solid lines indicates the simplest way to control an induction motor, and the auxiliary red dashed lines are optional compensation schemes for better performance.

Each block functions as below:

1. Speed limitation

   Speed limitation module limits the range of synchronous speed, as well as acceleration/deceleration rate to ensure a proper torque-speed operation point.

2. V/f curve

Figure 6. Block Diagram of Speed Open Loop Constant V/f Control

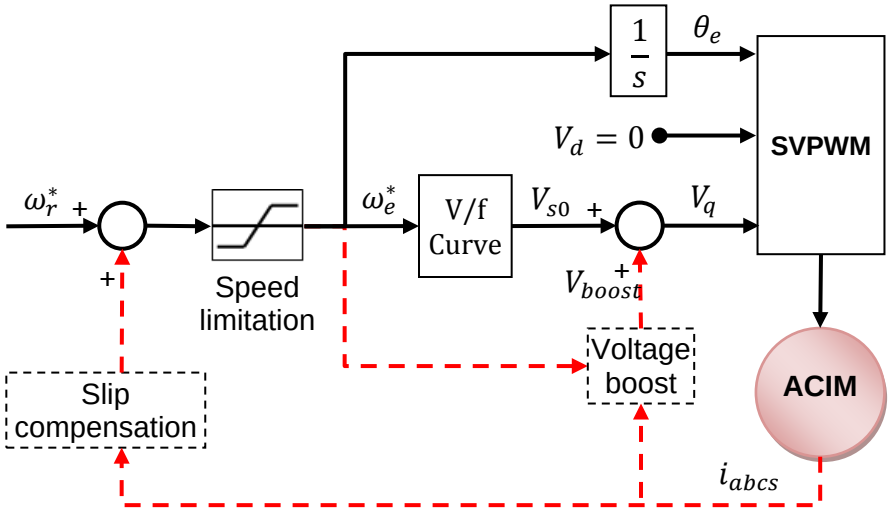

Figure 7. Speed Dependent Five-segment V/f Curve

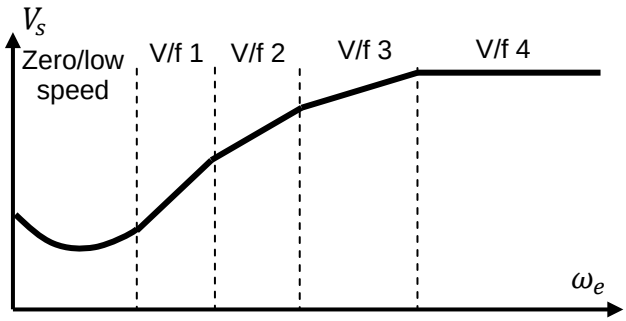

Other than single constant V/f curve, a varying V/f curve is preferred considering toque-speed characteristic.

Figure 7 shows an example of a five-segment V/f curve. The flux level varies with function of synchronous speed to meet application requirement.

3. Slip compensation

   As target speed is approximately controlled by synchronous speed, slip speed always exists, which results in speed error. To perform a higher accuracy speed control, a slip speed compensation scheme is implemented to estimate actual slip speed and super imposed on reference speed.

4. Voltage boost

   The voltage boost is performed to overcome voltage loss due to stator resistance and dead time effects at low speed region. In case stator current is available, a current based compensation could be adopted. Otherwise an offline boost curve (linear or nonlinear) can also start the motor quickly.

3.3 Speed Close Loop Constant Slip Control

When a speed sensor is equipped in a scalar control system for higher speed control accuracy, a constant slip control scheme is a good choice with consideration of control system response and power consumption.

From torque equations **(2-7)**, **(2-8),** and **(2-9)**, an electrical torque is a function of slip speed and current (or voltage). Therefore, if keeping a constant slip level, a torque control is realized by voltage or current control.

Figure 8 shows the constant slip control scheme with current sampling. In this scheme, both speed and current loop are implemented to ensure speed response. Due to current feedback, the current amplitude control is introduced. From **(2-7)**, since the slip speed is set as a constant, the electrical torque is uniquely decided by current amplitude. This indicates an independent torque control is realized by current control.

Figure 8. Constant Slip Control with Current Feedback

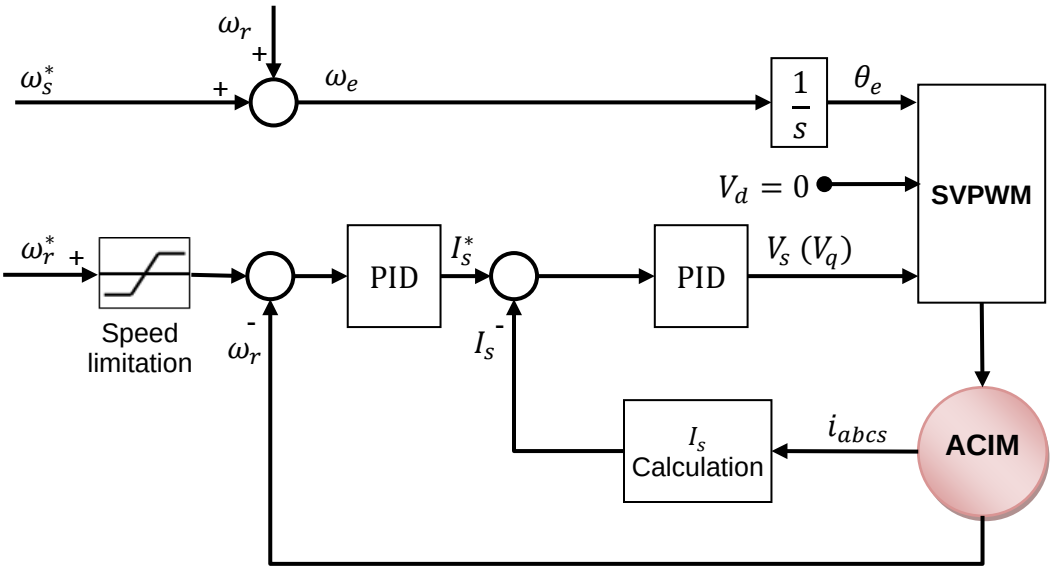

Figure 9. Constant Slip Control without Current Feedback

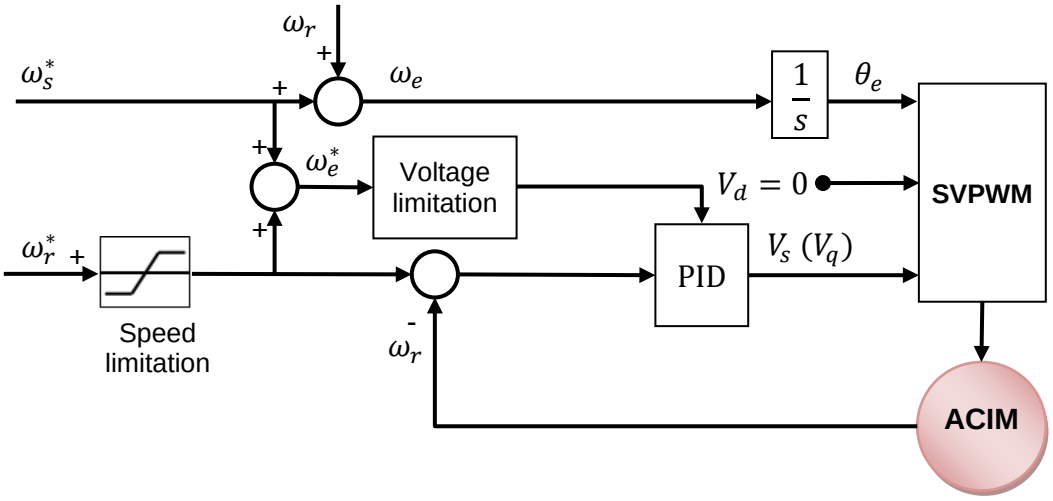

Figure 9 shows an alternative constant slip control scheme. Because current sampling is removed, a less expensive control is realized. Torque equation **(2-9)** suggests that when the slip speed is constant, the electrical torque is uniquely decided by V/f ratio. Thus the regulation target of a speed regulator could be V/f ratio or voltage, depending on the case of individual application.

3.3.1 Maximum Torque per Ampere (MTPA) Control

The MTPA control maximizes the torque to current ratio to minimize stator core loss, and its mathematical solution is derived from the following equation:

$$\frac{\partial}{\partial \omega_s}\frac{T_e}{|\boldsymbol{I_s}|^2} = 0 \qquad (3\text{-}1)$$

This resultant expression of slip speed is

$$\omega_s = \frac{R_r}{L_r} \qquad (3\text{-}2)$$

Equation **(3-2)** indicates that the MTPA control is realized by setting slip speed to equal to the reciprocal of rotor electrical time constant.

3.3.2 Maximum Efficiency Control

The maximum efficiency control minimizes the power loss on stator and rotor core. When a motor runs in balanced load condition, which means $T_{load} = T_e$, the power loss is calculated as

$$P_{loss} = P_{input} - P_{output} = 3real(\boldsymbol{V_s I_s}) - T_{load}\omega_r = \frac{2T_{load}}{P}\left[\frac{R_s R_r^2 + R_s(\omega_s L_r)^2}{\omega_s L_M^2 R_r} + \omega_s\right] \qquad (3\text{-}3)$$

And the mathematical solution of maximum efficiency control is derived from the following equation:

$$\frac{\partial}{\partial \omega_s} P_{loss} = 0 \qquad (3\text{-}4)$$

Thus slip speed is determined as below equation.

$$\omega_s = \sqrt{\frac{R_s R_r^2}{L_M^2 R_r + L_r^2 R_s}} \approx \frac{1}{\sqrt{2}}\frac{R_r}{L_r} \qquad (3\text{-}5)$$

Comparing to MTPA control, the slip speed of maximum efficiency control is approximately $1/\sqrt{2}$ of MTPA value.

3.4 Field Weakening Control

Considering stator voltage equation **(2-1)**, and ignoring the voltage drop on stator resistance, the voltage equation is simplified as

$$\boldsymbol{V_s} = j\omega_e \boldsymbol{\lambda_s} \tag{3-6}$$

The field weakening control decreases the stator flux level to increase the rotor speed with maximum available voltage. Investigating flux equation and torque equation, and assuming a constant load torque requirement, stator flux linkage may be written as the function of load torque and slip speed, as equation (**3-7**) shows:

$$|\boldsymbol{\lambda_s}| = \sqrt{\frac{2T_{load}}{3P} \cdot \frac{\left[L_s R_r^2 + \omega_s^2 \left(L_s L_r^2 - L_r L_M^2\right)\right]^2 + \left(\omega_s R_r L_M^2\right)^2}{L_M^2 R_r \omega_s [R_r^2 + (L_r \omega_s)^2]}} \tag{3-7}$$

Figure 10 shows the constant torque curve of the induction motor. With a constant load torque, the stator flux is a monotonous function of slip speed, and field weakening control is thus realized by slip speed control.

When introducing field weakening control in speed open loop V/f control system, the magnetizing flux level is determined by V/f ratio, and this V/f ratio could be designed by pre-commissioning process.

For a speed close-loop control system, since rotor speed is available, slip speed control is a more efficiency way for field weakening control, as Figure 11 shows.

Figure 10. Constant Torque Curve of Induction Motor

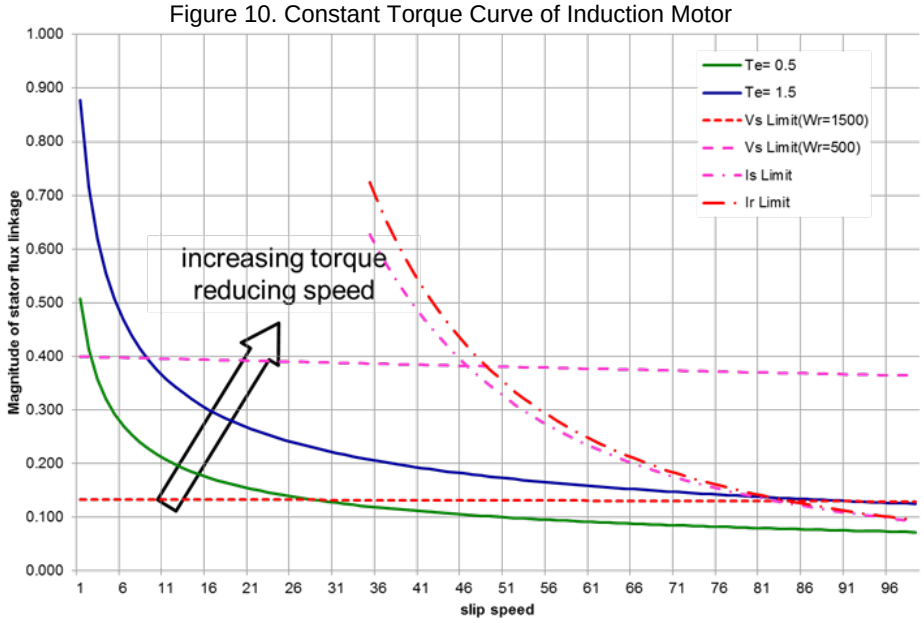

Figure 11. Block Diagram of Field Weakening Control with Speed Feedback

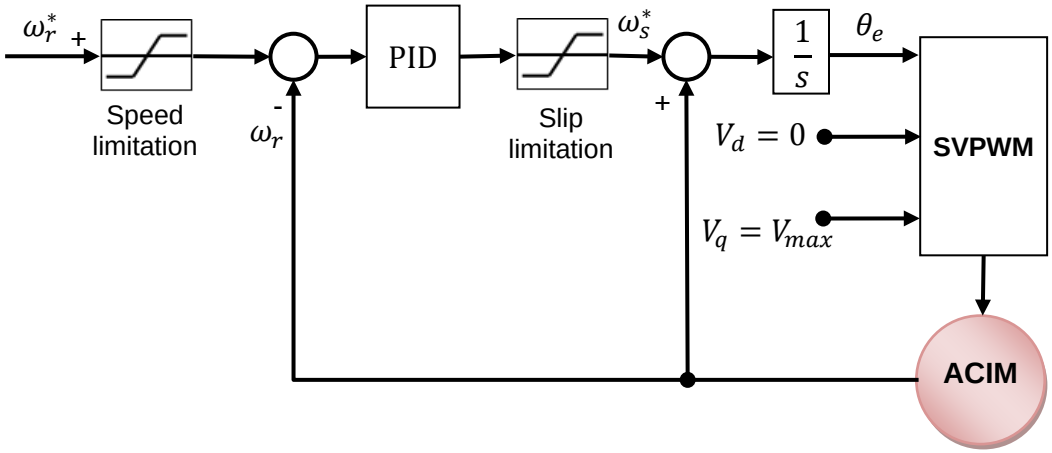

3.5 Braking Control

The braking control of an ACIM is realized by generating a negative torque. One method is to give a constant negative slip speed, which generates a constant braking torque. However, a considerable voltage boost on DC bus may damage hardware.

An alternative method of braking is possible by injecting a DC voltage into a stator. In this case, the braking torque is

$$T_e = -\frac{3P}{2} \cdot \frac{L_M^2 R_r \omega_r}{R_S^2 R_r^2 + (R_S \omega_r L_r)^2} |V_{DC}|^2 \quad (3\text{-}8)$$

And the current amplitude is determined by the DC voltage and stator resistance only, as equation **(3-9)** shows

$$|\boldsymbol{I_s}| = \frac{|\boldsymbol{V_s}|}{R_s} \quad (3\text{-}9)$$

Figure 12 shows the braking torque of the DC voltage injection, which depicts the braking torque under different DC voltage level. Particularly, as rotor speed decreases, braking torque increases.

Figure 12. Braking Torque of DC Voltage Injection

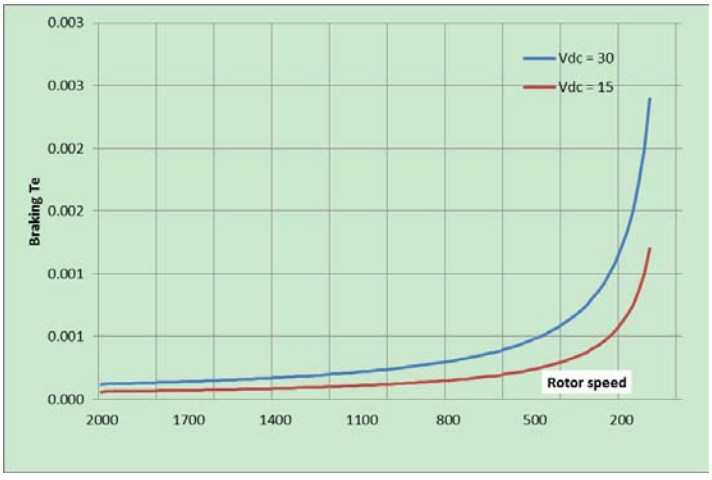

4 Construct a Scalar Control System

Figure 13 shows the selection of control schemes for different application requirements.

The easiest way to construct an induction motor driving system is forming a completely open loop control with a proper designed V/f curve and SVPWM, as block 1 shows.

In some cases, phase current or DC bus current sampling is implemented for protection or other requirements. If the phase current is available, the slip compensation is thus able to realize a more accurate speed control, as block 2 shows.

Once the rotor speed is known, the constant slip control is possible to apply. And this scheme provides a faster response, as well as power consumption saving. Furthermore, block 4 with a phase current sampling offers the best performance since the current is also controlled and torque response is further enhanced.

Figure 13. Scalar Control Schemes for Different Applications

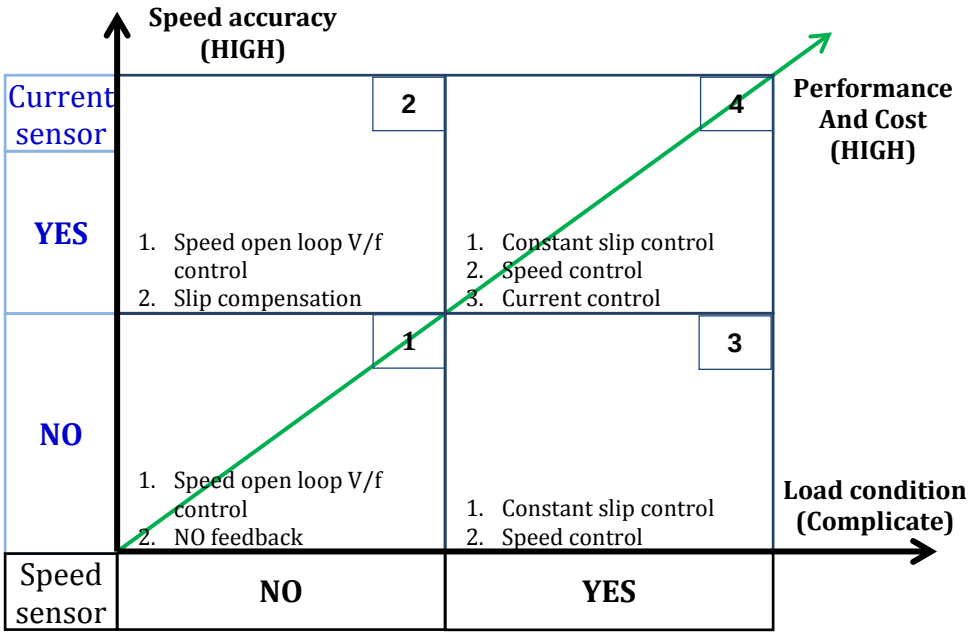

5 Summary

In this document, the scalar control of induction motor is introduced. Comparing to vector control schemes, the scalar control is less complicated and easy to construct.

Depending on application occasions, both speed open loop and close loop schemes are available to meet customer requirements. Additionally, if current sampling is available, current close loop control can be implemented for better performance.

6 Additional Information

For more Information on Cypress semiconductor products, visit the following websites:

English version address:

http://www.cypress.com/cypress-microcontrollers

Chinese version address:

http://www.cypress.com/cypress-microcontrollers-cn

Please contact your local support team for any technical question

http://www.cypress.com/cypress-solutionsnetwork

7 Reference Documents

[1]. P. C. Krause, O. Wasynczuk, and S. D. Sudhoff, *Electric Machinery and Drive Systems*. IEEE Press, 2002.

Document History

Document Title: AN204389 – FM0+Family 3-Phase ACIM Scalar Control

Document Number: 002-04389

Revision	ECN	Orig. of Change	Submission Date	Description of Change
**	-	CBZH	02/15/2015	Original version
*A	5233034	CBZH	04/26/2016	Migrated Spansion Application Note AN710-00001-1v0-E to Cypress format.

Worldwide Sales and Design Support

Cypress maintains a worldwide network of offices, solution centers, manufacturer's representatives, and distributors. To find the office closest to you, visit us at Cypress Locations.

Products

ARM® Cortex® Microcontrollers	cypress.com/arm
Automotive	cypress.com/automotive
Clocks & Buffers	cypress.com/clocks
Interface	cypress.com/interface
Lighting & Power Control	cypress.com/powerpsoc
Memory	cypress.com/memory
PSoC	cypress.com/psoc
Touch Sensing	cypress.com/touch
USB Controllers	cypress.com/usb
Wireless/RF	cypress.com/wireless

PSoC® Solutions

PSoC 1 | PSoC 3 | PSoC 4 | PSoC 5LP

Cypress Developer Community

Forums | Projects | Videos | Blogs | Training | Components

Technical Support

cypress.com/support

PSoC is a registered trademark and PSoC Creator is a trademark of Cypress Semiconductor Corporation. All other trademarks or registered trademarks referenced herein are the property of their respective owners.

Cypress Semiconductor
198 Champion Court
San Jose, CA 95134-1709

Phone : 408-943-2600
Fax : 408-943-4730
Website : www.cypress.com

© Cypress Semiconductor Corporation, 2015-2016. This document is the property of Cypress Semiconductor Corporation and its subsidiaries, including Spansion LLC ("Cypress"). This document, including any software or firmware included or referenced in this document ("Software"), is owned by Cypress under the intellectual property laws and treaties of the United States and other countries worldwide. Cypress reserves all rights under such laws and treaties and does not, except as specifically stated in this paragraph, grant any license under its patents, copyrights, trademarks, or other intellectual property rights. If the Software is not accompanied by a license agreement and you do not otherwise have a written agreement with Cypress governing the use of the Software, then Cypress hereby grants you a personal, non-exclusive, nontransferable license (without the right to sublicense) (1) under its copyright rights in the Software (a) for Software provided in source code form, to modify and reproduce the Software solely for use with Cypress hardware products, only internally within your organization, and (b) to distribute the Software in binary code form externally to end users (either directly or indirectly through resellers and distributors), solely for use on Cypress hardware product units, and (2) under those claims of Cypress's patents that are infringed by the Software (as provided by Cypress, unmodified) to make, use, distribute, and import the Software solely for use with Cypress hardware products. Any other use, reproduction, modification, translation, or compilation of the Software is prohibited.
TO THE EXTENT PERMITTED BY APPLICABLE LAW, CYPRESS MAKES NO WARRANTY OF ANY KIND, EXPRESS OR IMPLIED, WITH REGARD TO THIS DOCUMENT OR ANY SOFTWARE OR ACCOMPANYING HARDWARE, INCLUDING, BUT NOT LIMITED TO, THE IMPLIED WARRANTIES OF MERCHANTABILITY AND FITNESS FOR A PARTICULAR PURPOSE. To the extent permitted by applicable law, Cypress reserves the right to make changes to this document without further notice. Cypress does not assume any liability arising out of the application or use of any product or circuit described in this document. Any information provided in this document, including any sample design information or programming code, is provided only for reference purposes. It is the responsibility of the user of this document to properly design, program, and test the functionality and safety of any application made of this information and any resulting product. Cypress products are not designed, intended, or authorized for use as critical components in systems designed or intended for the operation of weapons, weapons systems, nuclear installations, life-support devices or systems, other medical devices or systems (including resuscitation equipment and surgical implants), pollution control or hazardous substances management, or other uses where the failure of the device or system could cause personal injury, death, or property damage ("Unintended Uses"). A critical component is any component of a device or system whose failure to perform can be reasonably expected to cause the failure of the device or system, or to affect its safety or effectiveness. Cypress is not liable, in whole or in part, and you shall and hereby do release Cypress from any claim, damage, or other liability arising from or related to all Unintended Uses of Cypress products. You shall indemnify and hold Cypress harmless from and against all claims, costs, damages, and other liabilities, including claims for personal injury or death, arising from or related to any Unintended Uses of Cypress products.
Cypress, the Cypress logo, Spansion, the Spansion logo, and combinations thereof, PSoC, CapSense, EZ-USB, F-RAM, and Traveo are trademarks or registered trademarks of Cypress in the United States and other countries. For a more complete list of Cypress trademarks, visit cypress.com. Other names and brands may be claimed as property of their respective owners.