The following document contains information on Cypress products. The document has the series name, product name, and ordering part numbering with the prefix “MB”. However, Cypress will offer these products to new and existing customers with the series name, product name, and ordering part number with the prefix “CY”.

How to Check the Ordering Part Number

1. Go to www.cypress.com/pcn.
2. Enter the keyword (for example, ordering part number) in the **SEARCH PCNS** field and click **Apply**.
3. Click the corresponding title from the search results.
4. Download the Affected Parts List file, which has details of all changes

For More Information

Please contact your local sales office for additional information about Cypress products and solutions.

About Cypress

Cypress is the leader in advanced embedded system solutions for the world's most innovative automotive, industrial, smart home appliances, consumer electronics and medical products. Cypress' microcontrollers, analog ICs, wireless and USB-based connectivity solutions and reliable, high-performance memories help engineers design differentiated products and get them to market first. Cypress is committed to providing customers with the best support and development resources on the planet enabling them to disrupt markets by creating new product categories in record time. To learn more, go to www.cypress.com.

AN204383

FM3 Microcontroller Sound Output Using PWM

Associated Part Family: Refer to Section 2

This application note is for users, who are considering using the sound output by PWM in the Cypress microcomputer FM3 family.

1 Introduction

This application note is for users, who are considering using the sound output by PWM in the Cypress microcomputer FM3 family.

2 Target products

This application note is described about below products;

(TYPE0)

Series	Product Number (not included Package suffix)
MB9B500A	MB9BF504NA,MB9BF505NA,MB9BF506NA, MB9BF504RA,MB9BF505RA,MB9BF506RA
MB9B500B	MB9BF504NB,MB9BF505NB,MB9BF506NB, MB9BF504RB,MB9BF505RB,MB9BF506RB
MB9B400A	MB9BF404NA,MB9BF405NA,MB9BF406NA, MB9BF404RA,MB9BF405RA,MB9BF406RA
MB9B300A	MB9BF304NA,MB9BF305NA,MB9BF306NA, MB9BF304RA,MB9BF305RA,MB9BF306RA
MB9B300B	MB9BF304NB,MB9BF305NB,MB9BF306NB, MB9BF304RB,MB9BF305RB,MB9BF306RB
MB9B100A	MB9BF102NA,MB9BF104NA,MB9BF105NA,MB9BF106NA, MB9BF102RA,MB9BF104RA,MB9BF105RA,MB9BF106RA

(TYPE1)

Series	Product Number (not included Package suffix)
MB9A310	MB9AF311L,MB9AF312L,MB9AF314L,MB9AF311M,MB9AF312M, MB9AF314M,MB9AF315M,MB9AF316M,MB9AF311N,MB9AF312N, MB9AF314N,MB9AF315N,MB9AF316N
MB9A310A	MB9AF311LA,MB9AF312LA,MB9AF314LA,MB9AF311MA, MB9AF312MA,MB9AF314MA,MB9AF315MA,MB9AF316MA, MB9AF311NA,MB9AF312NA,MB9AF314NA,MB9AF315NA,MB9AF316NA
MB9A110	MB9AF111L,MB9AF112L,MB9AF114L,MB9AF111M,MB9AF112M, MB9AF114M,MB9AF115M,MB9AF116M,MB9AF111N,MB9AF112N, MB9AF114N,MB9AF115N,MB9AF116N
MB9A110A	MB9AF111LA,MB9AF112LA,MB9AF114LA,MB9AF111MA,MB9AF112MA, MB9AF114MA,MB9AF115MA,MB9AF116MA,MB9AF111NA,MB9AF112NA, MB9AF114NA,MB9AF115NA,MB9AF116NA

(TYPE2)

Series	Product Number (not included Package suffix)
MB9BD10T	MB9BFD16S,MB9BFD17S,MB9BFD18S, MB9BFD16T,MB9BFD17T,MB9BFD18T
MB9B610T	MB9BF616S,MB9BF617S,MB9BF618S, MB9BF616T,MB9BF617T,MB9BF618T
MB9B510T	MB9BF516S,MB9BF517S,MB9BF518S, MB9BF516T,MB9BF517T,MB9BF518T
MB9B410T	MB9BF416S,MB9BF417S,MB9BF418S, MB9BF416T,MB9BF417T,MB9BF418T
MB9B310T	MB9BF316S,MB9BF317S,MB9BF318S, MB9BF316T,MB9BF317T,MB9BF318T
MB9B210T	MB9BF216S,MB9BF217S,MB9BF218S, MB9BF216T,MB9BF217T,MB9BF218T
MB9B110T	MB9BF116S,MB9BF117S,MB9BF118S, MB9BF116T,MB9BF117T,MB9BF118T

(TYPE3)

Series	Product Number (not included Package suffix)
MB9A130L	MB9AF131K,MB9AF132K,MB9AF131L,MB9AF132L
MB9A130LA	MB9AF131KA,MB9AF132KA,MB9AF131LA,MB9AF132LA

(TYPE4)

Series	Product Number (not included Package suffix)
MB9B510R	MB9BF512N,MB9BF514N,MB9BF515N,MB9BF516N, MB9BF512R,MB9BF514R,MB9BF515R,MB9BF516R
MB9B410R	MB9BF412N,MB9BF414N,MB9BF415N,MB9BF416N, MB9BF412R,MB9BF414R,MB9BF415R,MB9BF416R
MB9B310R	MB9BF312N,MB9BF314N,MB9BF315N,MB9BF316N, MB9BF312R,MB9BF314R,MB9BF315R,MB9BF316R
MB9B110R	MB9BF112N,MB9BF114N,MB9BF115N,MB9BF116N, MB9BF112R,MB9BF114R,MB9BF115R,MB9BF116R

(TYPE5)

Series	Product Number (not included Package suffix)
MB9A310K	MB9AF311K,MB9AF312K
MB9A110K	MB9AF111K,MB9AF112K

(TYPE6)

Series	Product Number (not included Package suffix)
MB9AB40N	MB9AFB41L,MB9AFB42L,MB9AFB44L,MB9AFB41M,MB9AFB42M, MB9AFB44M,MB9AFB41N,MB9AFB42N,MB9AFB44N
MB9AB40NA	MB9AFB41LA,MB9AFB42LA,MB9AFB44LA,MB9AFB41MA,MB9AFB42MA, MB9AFB44MA,MB9AFB41NA,MB9AFB42NA,MB9AFB44NA
MB9AA40N	MB9AFA41L,MB9AFA42L,MB9AFA44L,MB9AFA41M,MB9AFA42M, MB9AFA44M,MB9AFA41N,MB9AFA42N,MB9AFA44N
MB9AA40NA	MB9AFA41LA,MB9AFA42LA,MB9AFA44LA,MB9AFA41MA,MB9AFA42MA, MB9AFA44MA,MB9AFA41NA,MB9AFA42NA,MB9AFA44NA
MB9A340N	MB9AF341L,MB9AF342L,MB9AF344L,MB9AF341M,MB9AF342M, MB9AF344M,MB9AF341N,MB9AF342N,MB9AF344N
MB9A340NA	MB9AF341LA,MB9AF342LA,MB9AF344LA,MB9AF341MA,MB9AF342MA, MB9AF344MA,MB9AF341NA,MB9AF342NA,MB9AF344NA
MB9A140N	MB9AF141L,MB9AF142L,MB9AF144L,MB9AF141M,MB9AF142M, MB9AF144M,MB9AF141N,MB9AF142N,MB9AF144N
MB9A140NA	MB9AF141LA,MB9AF142LA,MB9AF144LA,MB9AF141MA,MB9AF142MA, MB9AF144MA,MB9AF141NA,MB9AF142NA,MB9AF144NA

(TYPE7)

Series	Product Number (not included Package suffix)
MB9AA30N	MB9AFA31L,MB9AFA32L, MB9AFA31M,MB9AFA32M, MB9AFA31N,MB9AFA32N
MB9A130N	MB9AF131M,MB9AF132M, MB9AF131N,MB9AF132N

3 Usage Example of PWM Sound Output

The contents of the PWM sound output differ in each clock frequency, which controls PWM.

The relationship between the clock frequency, sound quality, and usage example is indicated in Figure 1

Figure 1 Sampling Frequency, Sound Quality, Data Capacity, and Usage Example

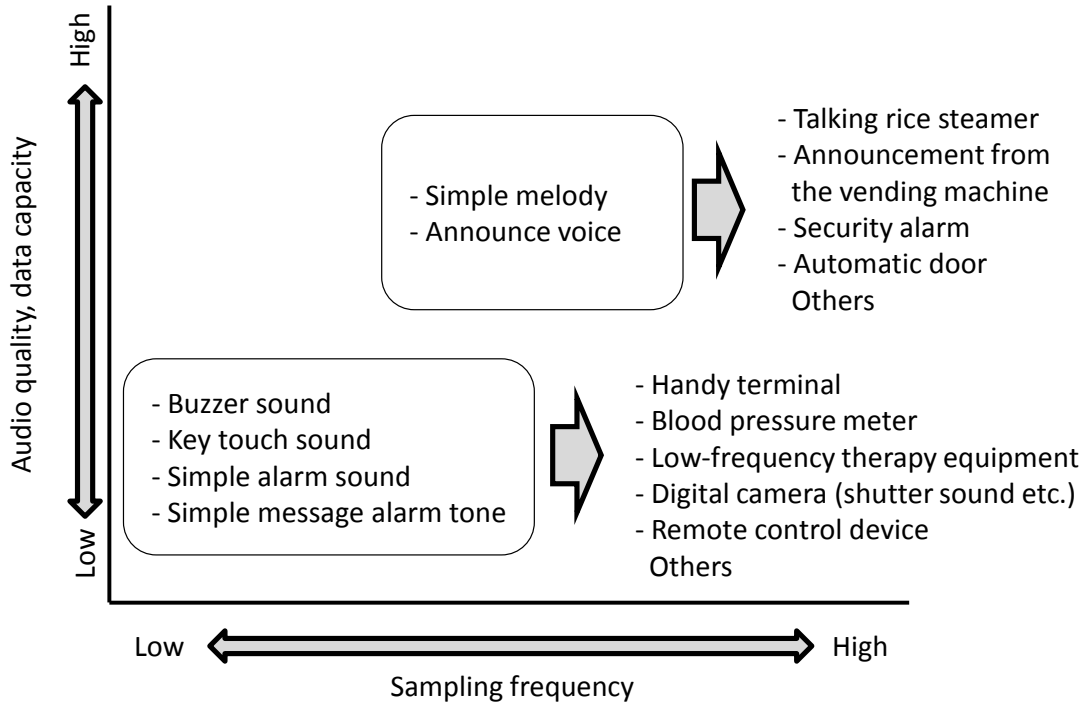

4 Principle

This section explains the principle to output PCM data in PWM and to output the sound.

The PCM data included in WAV files etc. are expressed by numeral values such as 8 bits and 16 bits.

In addition, these numeral values are generated by sampling the sound data. The frequency of executing this sampling is called a sampling frequency.

For example, if analog sound data is sampled for 8,000 times per second, the sampling frequency is 8 kHz.

In order for PWM to output the PCM data, set the PWM according to the bit number and the sampling frequency of the PCM data.

Sound files such as a WAV file consist of (A) the section in which the data information is written, and (B) the section in which actual data is written. For the bit number and the sampling frequency, see (A), and for the data itself, see (B).

For example, if the PCM data is

- Sampling frequency : 8 kHz
- Data bit number : 8 bit
- Data : 0x12, 0x34, …

acquire the PWM set values as follows

■ **How to acquire the PWM set values**

Set each set value as “a”, “b”, and “c” as indicated in Figure 2

Figure 2 Set values of PWM

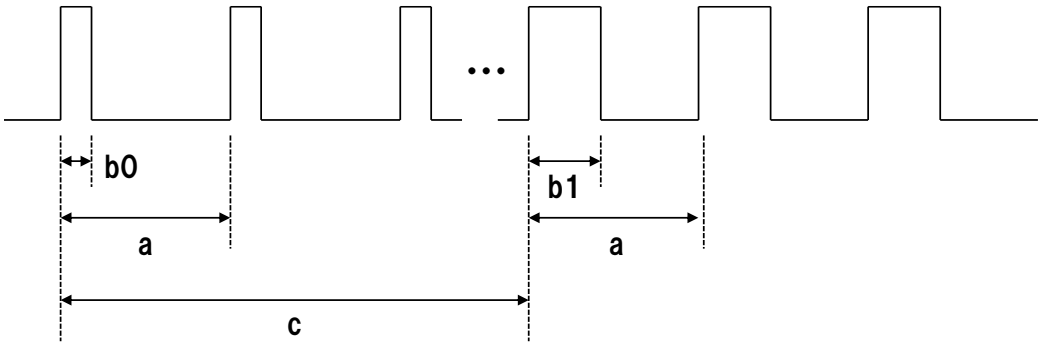

a: PWM cycle

b: PWM duty

c: Period to output each data

“a” is the PWM cycle, and as this value decreases, the sound quality increases. As one example, set a value 1/16 or less of the latter “c”.

When the sampling frequency is 8 kHz, the following expression is acquired.

- a = (1/8k)/16 = 7.81×10^{-6}

In addition, value “m” set to the FM3 PWM Cycle Set Register (PCSR) becomes

- m = (a / T) – 1

when the relationship between the PWM cycle “a” is acquired in the following expression. (For details, see the FM3 peripheral manual.)

- a = T(m+1)ms
  T: Count clock frequency
  (= Reciprocal of the peripheral clock APB1. Reciprocal of the peripheral operation frequency in Table 1)
  m: PWM Cycle Set Register (PCSR) value

“b” is the PWM duty. Acquire “b” by using the following expression and set.

- b0 = (0x12 / 0xFF) × a
  b1 = (0x34 / 0xFF) × a
  * 0x12 and 0x34 are examples of the PCM data

“c” is the period in which the same PCM data are output.

(Ex.) When the sampling frequency is 8 kHz: Set to 1/8000 sec.

By the above explanation contents, the PWM set value is determined. The waveform indicated in Figure 2 is output from FM3. The circuit overview from FM3 to the speaker is indicated in Figure 3.

Figure 3. Sound output circuit

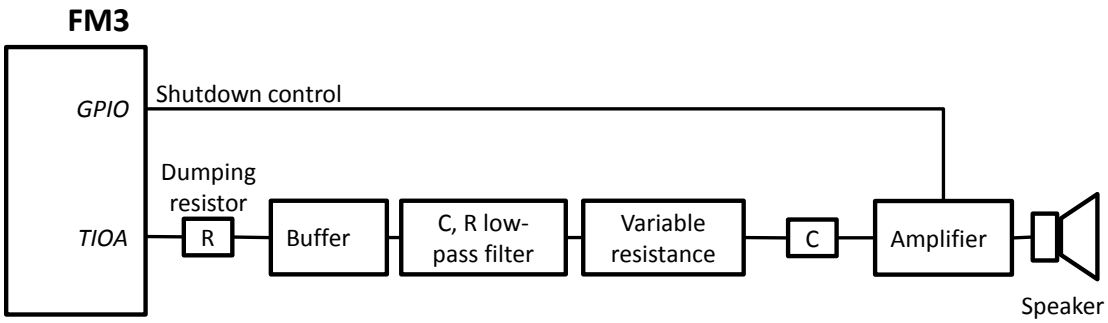

The waveform output from FM3 is the rectangular waveform of the digital signal. However, to output the sound from the speaker, this rectangular waveform has to be converted to the analog signal.

The circuit to convert the waveform to the analog signal is the low-pass filter.

The images of the rectangular waveform output from FM3 and the waveform after passing through the low-pass filter are indicated in Figure 4

The low-pass filter can be structured by the capacitor and the resistor. Review the suitable constant by the outputting sound, and then set the constant.

Figure 4. Images of the PWM Output Waveform and the Waveform after passing through the Low-Pass Filter

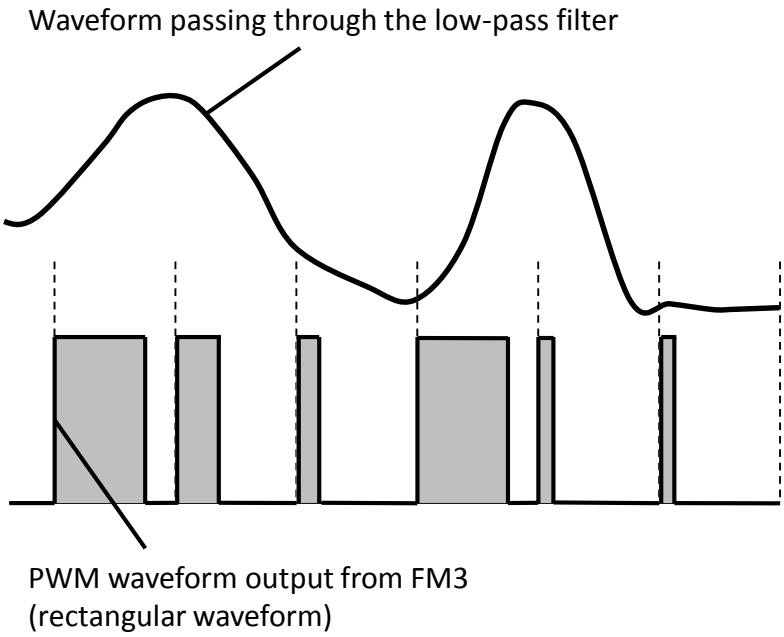

5 Operation Check Conditions

The operation check environment for the contents described in this application note is indicated in Table 1

Table 1. Operation Check Environment

No.	Item	Content	Remarks
1	Using microcontroller	MB9AF132L	
2	Operating frequency	Core: 20 MHz Peripheral: 10 MHz	
3	Operating voltage	+3.3V	
4	OS	Not used	
5	Integrated Development Environment	[IAR] IAR Embedded Workbench for ARM Ver.6.30.4	
		[KEIL] MDK-Lite Version 4.22a	
6	Compile optimization	None	

6 Explanation of Sample Program

This section explains the sample program, which outputs sound by using the PWM output of FM3.

The control flow of the sound output by the PWM output of the sample program is indicated in Figure 5.

Control flow

Figure 5. Control Flow of Sound Output by PWM Output

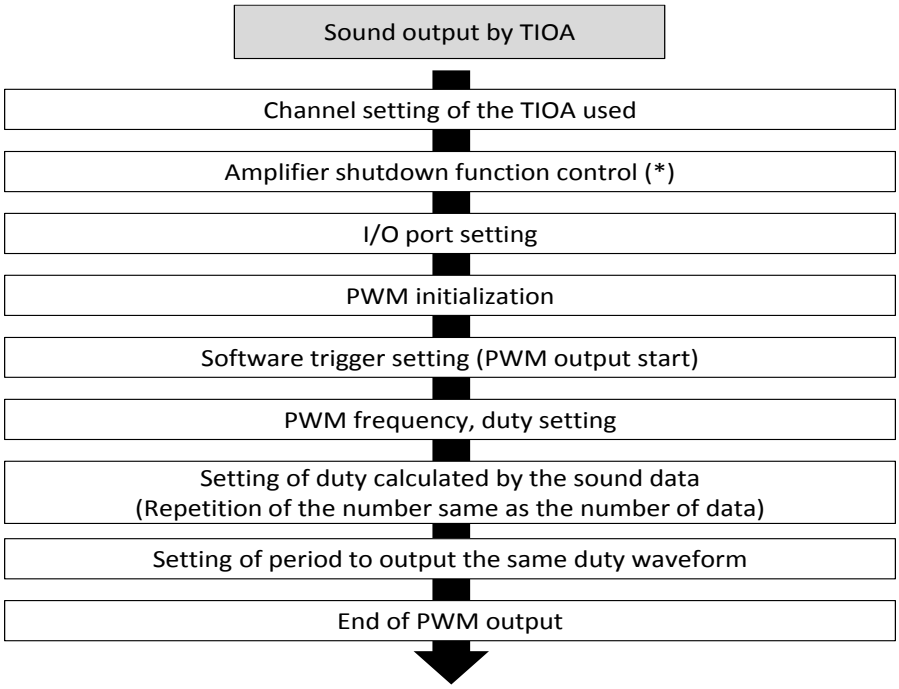

(Execute the step marked with (*) when necessary.)

Sample Program

```
void sample_pwm(void)
{
   PwmDev_IOB *pwm;
   int32_t i;
   uint16_t j;
   pwm = &PwmDev[PWM_CH];
   /* Set AMP Enable Port4B Output_L */
   FM3_GPIO->PFR4 = FM3_GPIO->PFR4 | 0x0000;
   FM3_GPIO->PDOR4 = FM3_GPIO->PDOR4 | 0x0000;
   FM3_GPIO->DDR4 = FM3_GPIO->DDR4 | 0x0800;
   /* Set I/O port */
   FM3_GPIO->PFR3 = FM3_GPIO->PFR3 | 0x00001000;  /* Use P3C */
   FM3_GPIO->EPFR04 = FM3_GPIO->EPFR04 | 0x00080000;  /* Use TIOA2_1 */

   /* Initialized */
         pwm->Init();

   /* Start */
   pwm->SetSWTrigger();
   /* Set Period */
   pwm->SetPeriodAndDuty(PWM_PERIOD,PWM_DUTY);
   /* Set Duty */
      for(j=0;j<5724;j++)
      {
         pwm->SetDuty(data[j]);

         for(i=0;i<384;i++)
           {
              ;
           }
      }
   /* Uninitialized */
   pwm->UnInit();
```

Set the PWM channel used. In this sample program, it is set in the header file.

Example where the sound output circuit amplifier has the shutdown function and where GPIO is used for controlling. It is used to reduce power while no sound is output or to prevent the output of the unintended sound (noise).

Set the I/O port used in PWM. In this example, TIOA2_1 is used.

Set the PWM frequency and the duty. Input a value calculated in “How to acquire the PWM set values.” Set the duty here if the constant sound such as 1 kHz is to be always output. If the sound, which is not constant, such as an announcement is output, set 0.

The duty is changed for the number of sound data. Therefore, repeat with a “for” sentence. In this example, repetition for 5724 times is executed.

data[ ] is an array of the sound data. In this sample program, 5724 data are stored.

Outputs PWM of the set duty for the “c” value calculated in “How to acquire the PWM set values.”

7 Reference Documents

1. FM3 Family PERIPHERAL MANUAL Timer Part MN706-00022-1v0-E

(Please refer to the latest document.)

8 Document History

Document Title: AN204383 - FM3 Microcontroller Sound Output Using PWM

Document Number: 002-04383

Revision	ECN	Orig. of Change	Submission Date	Description of Change
**	-	YUIS	07/02/2012	Initial Release
			01/31/2014	Company name and layout design change
*A	5034185	YUIS	12/02/2015	Migrated Spansion Application Note from AN706-00051-1v1-E to Cypress format
*B	5888521	NNAK	09/19/2017	Adapted new Cypress logo

Worldwide Sales and Design Support

Cypress maintains a worldwide network of offices, solution centers, manufacturer's representatives, and distributors. To find the office closest to you, visit us at Cypress Locations.

Products

ARM® Cortex® Microcontrollers	cypress.com/arm
Automotive	cypress.com/automotive
Clocks & Buffers	cypress.com/clocks
Interface	cypress.com/interface
Internet of Things	cypress.com/iot
Memory	cypress.com/memory
Microcontrollers	cypress.com/mcu
PSoC	cypress.com/psoc
Power Management ICs	cypress.com/pmic
Touch Sensing	cypress.com/touch
USB Controllers	cypress.com/usb
Wireless/RF	cypress.com/wireless

PSoC® Solutions

PSoC 1 | PSoC 3 | PSoC 4 | PSoC 5LP | PSoC 6

Cypress Developer Community

Forums | WICED IOT Forums | Projects | Video | Blogs | Training | Components

Technical Support

cypress.com/support

ARM and Cortex are the registered trademarks of ARM Limited in the EU and other countries.

All other trademarks or registered trademarks referenced herein are the property of their respective owners.

Cypress Semiconductor
198 Champion Court
San Jose, CA 95134-1709

© Cypress Semiconductor Corporation, 2013-2017. This document is the property of Cypress Semiconductor Corporation and its subsidiaries, including Spansion LLC ("Cypress"). This document, including any software or firmware included or referenced in this document ("Software"), is owned by Cypress under the intellectual property laws and treaties of the United States and other countries worldwide. Cypress reserves all rights under such laws and treaties and does not, except as specifically stated in this paragraph, grant any license under its patents, copyrights, trademarks, or other intellectual property rights. If the Software is not accompanied by a license agreement and you do not otherwise have a written agreement with Cypress governing the use of the Software, then Cypress hereby grants you a personal, non-exclusive, nontransferable license (without the right to sublicense) (1) under its copyright rights in the Software (a) for Software provided in source code form, to modify and reproduce the Software solely for use with Cypress hardware products, only internally within your organization, and (b) to distribute the Software in binary code form externally to end users (either directly or indirectly through resellers and distributors), solely for use on Cypress hardware product units, and (2) under those claims of Cypress's patents that are infringed by the Software (as provided by Cypress, unmodified) to make, use, distribute, and import the Software solely for use with Cypress hardware products. Any other use, reproduction, modification, translation, or compilation of the Software is prohibited.

TO THE EXTENT PERMITTED BY APPLICABLE LAW, CYPRESS MAKES NO WARRANTY OF ANY KIND, EXPRESS OR IMPLIED, WITH REGARD TO THIS DOCUMENT OR ANY SOFTWARE OR ACCOMPANYING HARDWARE, INCLUDING, BUT NOT LIMITED TO, THE IMPLIED WARRANTIES OF MERCHANTABILITY AND FITNESS FOR A PARTICULAR PURPOSE. To the extent permitted by applicable law, Cypress reserves the right to make changes to this document without further notice. Cypress does not assume any liability arising out of the application or use of any product or circuit described in this document. Any information provided in this document, including any sample design information or programming code, is provided only for reference purposes. It is the responsibility of the user of this document to properly design, program, and test the functionality and safety of any application made of this information and any resulting product. Cypress products are not designed, intended, or authorized for use as critical components in systems designed or intended for the operation of weapons, weapons systems, nuclear installations, life-support devices or systems, other medical devices or systems (including resuscitation equipment and surgical implants), pollution control or hazardous substances management, or other uses where the failure of the device or system could cause personal injury, death, or property damage ("Unintended Uses"). A critical component is any component of a device or system whose failure to perform can be reasonably expected to cause the failure of the device or system, or to affect its safety or effectiveness. Cypress is not liable, in whole or in part, and you shall and hereby do release Cypress from any claim, damage, or other liability arising from or related to all Unintended Uses of Cypress products. You shall indemnify and hold Cypress harmless from and against all claims, costs, damages, and other liabilities, including claims for personal injury or death, arising from or related to any Unintended Uses of Cypress products.

Cypress, the Cypress logo, Spansion, the Spansion logo, and combinations thereof, WICED, PSoC, CapSense, EZ-USB, F-RAM, and Traveo are trademarks or registered trademarks of Cypress in the United States and other countries. For a more complete list of Cypress trademarks, visit cypress.com. Other names and brands may be claimed as property of their respective owners.