AN1077

Replacing Wire with Inexpensive Plastic Fiber Solutions

Author: Cypress
Associated Project: No
Associated Part Family: HOTLink®
Software Version: N/A
Associated Application Notes: AN1130, AN1032

AN1077 explains the advantages of low cost fiber-optic solution and ways to implement it using Cypress CY7B923/CY7B933 HOTLink transceivers.

Contents

Introduction 1
Scope 1
Advantages of Optical Media 2
Common Uses 2
Implementing a Link 2
Data Coding 3
Serializer/Deserializer - HOTLink 4
HOTLink Operation 4
Initializing the Link 5
BIST 5
Evaluation Boards 5
Fiber-Optic Media 5
Optical Receivers 6
Advantages of Encoded Run-Limited Data 6
Optical Link Design 7
Only One Transceiver Design Needed 7
Distances Limits at 160 MBaud Signaling Rate 7
Simple PECL Compatible LED Transmitter 8
Simple High Sensitivity PECL Compatible Receiver 8
A Complete Fiber-Optic Transceiver Solution 9
Error Rates and Noise Immunity 9
Signal Terminations and Power Supply Filtering Requirements 10
Printed Circuit Artwork 11
Parts List 11
Plastic Optical Cables 11
Conclusion 11
References 11
Appendix A. Parts List 12
Appendix B. Printed Circuit Artwork 13
Appendix C. Assembly of POF Connectors and Cables 14
Document History 16
Worldwide Sales and Design Support 17

Introduction

Communication with fiber-optics has many advantages over electrical or “wire”-based interfaces. Unfortunately, fiber has often been considered an expensive or exotic solution, limited to high-end applications that absolutely require it. With the advent of inexpensive optical devices and plastic optical fiber (POF), this technology can now be implemented at costs that are competitive with copper wire.

This application note explains the advantages of this low-cost fiber-optic solution and ways to implement it using Cypress’ CY7B923/933 HOTLink® transceivers. It covers some likely applications and a brief explanation of how to use HOTLink with optical interfaces. The trade-offs between signaling rate and distance are also addressed.

Included in this application note are detailed design schematics, circuit board artwork, and a complete parts list that allow implementation of these low-cost fiber optic links. Also included are detailed procedures on the handling of plastic optical fiber used to build these links.

Scope

This document focuses on the range of performance and distance options possible with low-cost POF. This selection allows replacement of copper media at distances up to 50 m at serial signaling rates of 150-to-160 MBaud. Additional references are provided for alternative fiber-optic components and faster versions of HOTLink that support a much larger range of distance and data rates.

Advantages of Optical Media

Fiber-optic media has numerous advantages over copper cables:

- Complete electrical isolation
- Small media size
- Light weight
- No radiated emissions from the optical media
- Immune from external electrical influences
- High data carrying capacity

These advantages make optical fiber the media of choice for electrically hostile or sensitive environments. All major issues of electromagnetic compatibility (radiated emissions, arcing, static discharge, ground loops, ground offsets, stray currents, and so on) disappear.

Fiber-optic links also simplify many design aspects of serial interfaces:

- No need for coupling magnetics or capacitors to achieve DC isolation
- No need for bulky cable shields
- No transmission-line impedance or crosstalk concerns

Common Uses

Fiber-optic communications are desirable in many applications:

- Medical Equipment - A fiber-optic connection provides absolute electrical isolation. This is often necessary for the safety of the patient, or to allow sensitive measurements to occur without the introduction of electrical noise that would upset delicate measuring devices.
- Heavy machinery - Monitoring and controlling heavy equipment requires very accurate information transfer within the control system and equipment. High levels of electrical interference or ground offsets generated by the equipment can potentially disrupt this communication when used with electrical interfaces.
- Video - Video requires high bandwidth and moderate distances between the camera and monitoring equipment. The easy handling and termination of plastic optical fiber simplifies cabling and avoids safety and ground offset issues. New video standards (such as Digital Video Broadcast and SMPTE 292M) actually specify fiber-optic interfaces.
- In-flight entertainment - Video and audio distribution in aircraft requires few transmitters but many receivers. Due to the sensitive navigation and communications equipment on the aircraft, radiated emissions must be kept to an absolute minimum.
- Avionics - Today's commercial aircraft have in excess of 200,000 m of electrical cables, with many used to control the flight processes. These cables add a large amount of weight to the aircraft. Replacing these cables with optical fiber can remove a significant amount of weight from the plane, allowing a greater payload capacity, lower fuel consumption, or greater distance. Commercial aircraft also generate high levels of RF energy for RADAR that must not interfere with other control systems.
- Equipment back bone - In the most general of applications, connecting board-to-board, or chassis-to-chassis, optical fiber offers an electrically secure environment with high bandwidth for data transfer. It can safely be used in hostile process control environments such as nuclear power plants, or other locations where there may be drastic differences in potential between the various pieces of equipment.

The physical attributes of optical fiber are also intrinsically safer than electrical cables. When cut or damaged there are no shock or fire hazards, and they cannot cause a short circuit. When used with LED-based optical transmitters (or low-power LASERs) there is no optical eye hazard. Plastic (and glass) fiber provides a high degree of flexibility and can carry more data per equivalent cross-sectional area than copper cables. The use of optical fiber in physically hostile environments, such as water, harsh weather, or explosive gases, presents no issues of safety or loss of functionality.

Implementing a Link

There are three primary components in a link:

- Serializer/Deserializer - The quality of the phase-locked loop (PLLs) and drivers/receivers in the serializer/deserializer have a significant impact on signaling rate and transmission distance. The serializer and electrical driver determine how much jitter is added before the optical transmitter. The deserializer extracts both clock and data from the received signal and determines how much jitter the interface can tolerate while continuing to extract correct data. While the

Cypress CY7B923/33 HOTLink is the subject of this application note for these functions, additional solutions are also possible using the Cypress CY7C955 SONET/SDH Transceiver and ATM cell processor, or the CY7B951/952 SONET Synchronous Transceiver (SST) clock/data separator parts.

- Media - The media determines many of the issues of signaling rate and distance. Greater distances and/or speeds often require improved media and/or optics to overcome losses and dispersion inherent in the fiber.
- Media driver/receiver - Optical media is driven by either LED or LASER drivers. These convert the serial data between the electrical and optical domains. Characteristics of optical power, spectral purity, and wavelength all effect the dispersion and delivered power. The sensitivity, bandwidth, and random noise of the optical receiver determines the usable distance and error rate of the link.

Sending data across a link requires more than just stuffing bits in one end and having them show up at the other. The bits arriving at the deserializer must be sampled with a clock to return them to a digital domain. With slower serial interfaces, such as audio-spectrum telecommunications modems, this clocking may often be done through an asynchronous oversampling of the received bit stream. At the faster data rates used here, this oversampling becomes quite impractical.

At faster transfer rates the sample clock must operate at the same rate as the bits in the data stream. While the sample clock could be delivered on a separate link, this is generally poor practice. The time skew between data and clock is difficult to manage, and the cost of a second link makes this prohibitive. Since no sample clock is delivered to the deserializer along with the data, a clock must be extracted from the data stream. This is accomplished through the use of a high performance PLL that detects the transitions in the serial stream.

Unfortunately, a Non-Return to Zero (NRZ) data stream may contain few if any transitions, especially when sending data of mostly one or zero bits. To send data of this type, the data itself must be modified to force additional transitions into the data stream. This modification is known as coding.

Data Coding

Numerous methods exist to force additional transitions into a data stream. These can generally be broken down into two categories: scrambling and encoding.

Scrambling

Scrambling modifies a data stream by merging it with one or more randomizer polynomials. Scrambling, used in telecommunications interfaces such as SONET and ATM, is 100% efficient. For every bit in the source data stream, a single bit is sent across the interface.

While this would at first appear as the perfect solution, scrambling does have its drawbacks. The characteristics of a scrambler are such that the scrambler can be zeroed-out by specific data patterns. Zero bits transmitted following this are transmitted without transitions.

A scrambled interface is also somewhat limited in how link control information is moved across a link. Because the link efficiency is perfect, all combinations of bits are used to represent data. This requires all link control information to be sent as combinations of data characters.

Encoding

The other method of forcing transitions involves encoding. In an encoded interface, the source data is modified by mapping the source data into alternate bit combinations called symbols. These symbols are constructed with extra bits that guarantee a minimum transition density.

Many different forms of encoding are used with serial interfaces, all having less than 100% efficiency. This means that more bits must be transmitted on the serial interface than are present in the source data. Encoded interfaces generally have link efficiencies ranging from 50-to-95%.

One of the most popular encodings is known as 8B/10B. This encoding is used by popular high-speed serial interfaces, such as Fibre Channel, ATM, ESCON™, Gigabit Ethernet, and DVB-ASI. The 8B/10B code maps an 8-bit data character into a 10-bit symbol known as a transmission character. This code is optimized for transmission across optical media.

8B/10B encoding is used for a number of reasons:

- Transition Density - The receiver PLL requires transitions in the received bits to maintain a lock on the data stream 8B/10B encoding forces a large number of transitions into the data stream and prevents continuous strings of ones or zeros from being sent.
- DC Balance - 8B/10B encoding limits the low frequency content in the data stream. This allows the use of low-cost AC-coupled optical modules.
- Error Detection - 8B/10B encoded characters follow specific rules that allow many signaling errors to be immediately detected.
- Special Characters - Special characters are characters that can be included in a data stream that are not decoded as normal data characters. These special characters may be used as

general delimiters for controlling an interface (such as video sync, start-of-frame, end-of-frame, and so on) or other generalized commands to the remote site.

When data is encoded, a characteristic known as Run-Length-Limit (RLL) is established. This limit specifies the maximum number of consecutive ones or zeros that can occur in the transmitted serial bit-stream. For the 8B/10B code the run length limit is five.

Serializer/Deserializer - HOTLink

HOTLink is the name for a pair of Cypress devices designed to transmit and receive data across serial interfaces. The HOTLink transmitter accepts data as 8-bit parallel characters, encodes this data using the 8B/10B encoding rules, and performs the parallel-to-serial conversion. This allows the data to be transmitted across optical (or copper) media to a companion receiver, which extracts clock and data from the serialdata stream, deserializes and decodes the data, and outputs this as 8-bit parallel characters.

HOTLink Operation

HOTLink operates as a pipeline-register extender. It accepts data on the rising edge of a synchronous clock operating at the character rate. For those designs that are not synchronous, HOTLink also supports seamless interfacing to either clocked or asynchronous FIFOs. This is covered in detail in the Cypress application note *AN1130 - Interfacing the CY7B923 and CY7B933 (HOTLink) to Clocked FIFOs*.

When operated with FIFOs, data transfer rates much slower than the character rate are possible. When the source FIFO contains little or no data, the HOTLink transmitter automatically generates a special “fill” character (known as a K28.5) that may be simply discarded at the receiver. These characters are also used to frame the receiver to the serial bit stream and to maintain synchronization of the link.

Special Characters

The 8B/10B code used with HOTLink has twelve special characters. These special characters may be transmitted at any time and allow in-band signaling. Except for the previously described fill character (K28.5), the meaning or function of these special characters is user definable. Table 1 lists the 8B/10B names of these special characters, as well as the name and format of these characters when input and decoded by HOTLink. Additional information on the 8B/10B code may be found in the CY7B923/933 HOTLink datasheet.

Table 1. Valid Special Character Codes (SC/D = HIGH)

8B/10B Character	HOTLink Character	HEX Encoding
K28.0	C0.0	00
K28.1	C1.0	01
K28.2	C2.0	02
K28.3	C3.0	03
K28.4	C4.0	04
K28.5	C5.0	05
K28.6	C6.0	06
K28.7	C7.0	07
K23.7	C8.0	08
K27.2	C9.0	09
K29.7	C10.0	0A
K30.7	C11.0	0B

These special characters are injected into the data stream by presenting a HIGH level at the SC/D input of the HOTLink transmitter. When a special character is received and present in the HOTLink receiver output register, the receiver SC/D output is driven HIGH.

For video applications, these special characters can be used for horizontal and vertical sync indicators. For other bus-to-bus applications they may be used as control strobes or data border markers. The user may switch modes of data using these markers, e.g., inserting address pointers between data packets in a point-to-point or networking application.

Signaling and Data Rates

Both HOTLink and POF components operate over wide signaling- rate ranges. HOTLink components are available that operate at serial signaling rates of 150-to-400 MBaud. Low cost POF media, drivers, and receivers are available that operate at serial rates of 10-to-160 MBaud. The 155 MBaud rate, supported by both of these component families, is an industry standard serial rate for ATM and SONET OC-3 telecommunications interfaces.

Unlike a scrambled ATM or SONET interface, an 8B/10B encoded stream has an overhead of 25%; i.e., to deliver eight data bits across the serial interface, a total of ten bits must actually be transmitted and received across the serial interface. With a signaling rate of 155 MBaud, the data rate (the amount of user data moved across the interface) is only 124 Mbits/second. Since HOTLink uses 8-bit data characters, the sustained byte rate is 15.5 MBytes/second.

Users needing higher data rates can either use unencoded 10-bit data (and get 100% of the link bandwidth), or higher speed versions of HOTLink that support serial signaling rates up to 400 MBaud. Note that any scheme using unencoded data is responsible for maintaining sufficient transition density for the HOTLink receiver PLL to maintain a lock to the serial data stream.

Detailed operation and usage of HOTLink is available in the CY7B923/933 datasheet.

Initializing the Link

Unlike a parallel interface, high-speed serial interfaces require a number of initialization steps before they can reliably transfer data. These steps allow the remote receiver to synchronize itself with the serial transmitter, and to locate the character boundaries in the serial bit-stream.

To achieve synchronization, the local HOTLink serializer must be transmitting a continuous stream of characters. The transitions in the transmitted bits allow the remote HOTLink receiver PLL to achieve both phase and frequency lock to the data stream. This may require a few thousand bits, but is only necessary if the serial stream between the transmitter and receiver is disrupted.

Framing

The next step is for the HOTLink receiver to locate the beginning and ending points of the characters embedded within the data stream. This process is known as framing, and operates by detecting a specific sequence of bits within the serial data stream. This specific bit sequence is contained within the K28.5 special character.

Upon power-up, or if framing is ever lost, the HOTLink transmitter should be configured to send K28.5 characters until proper framing is accomplished. If phase and frequency lock have already been achieved by the HOTLink receiver, framing should occur upon reception of one or two K28.5 characters (depending on the present framing mode of the HOTLink receiver). Once proper framing is established, the transmitter can resume sending data.

BIST

HOTLink contains a Built-In Self Test (BIST) capability that can be used to verify the stability of a link, or simply as a method of easily testing a link. BIST may be initiated at anytime by asserting the BISTEN input to both the HOTLink transmitter and receiver. Once enabled, the HOTLink transmitter continuously sends a pseudo-random sequence of characters to the receiver, which checks the received characters to verify their accuracy. BIST provides a simple method of link testing with minimal management control logic.

Evaluation Boards

CY9266 Evaluation boards for HOTLink (see Note 1) are available for both optical-fiber and copper cable interfaces. These boards may be interfaced to host systems through either a simple edge connector or an IBM OLC-266 compatible connector. The CY9266-F (and -FX) card supports standard 1X9 optical modules from Hewlett Packard and other manufacturers. The operating character rate for these cards is set by either an external character-rate clock, or through a socketed oscillator. Custom frequencies may be provided by the Cypress ICD6233 Quixtal programmable oscillator (see Note 1).

The CY9266 contains direct support for BIST, including a 2-digit BIST error-counter display. A single evaluation board can be configured to loop the serial stream back to itself either locally or through the selected media. Two evaluation boards may be interconnected to form a full duplex link.

Note 1. This is obsolete

Fiber-Optic Media

Media selection is greatly affected by the required data rate and distance. As the data rate is increased, the bit period is reduced, and as the optical media is lengthened less optical power is delivered to the receiver. Both of these cause the stable time within each delivered bit (the “eye” opening) to decrease. When operated with multimode optical media, both chromatic and modal dispersion also cause the received signal eye to shrink. Similar effects are present with copper cables, caused by the frequency selective attenuation of the media.

Four types of fiber are in common use with optical links:

- Plastic Optical Fiber (POF)
- Hard Clad Silica (HCS®)
- Multimode graded index
- Single-mode
- Single-mode

POF is a step-index multimode plastic optical media that transfers light by optical reflection. This limits its use to relatively short operational lengths, and only moderate data rates. It is the lowest cost media to use for optical interconnect, and the simplest to connectorize.

Hard Clad Silica (HCS) is a step-index multimode glass fiber that uses a plastic cladding. The step index of this fiber also limits its use to only moderate lengths and data rates. The glass core has much less attenuation and allows it to be used with longer wavelength (1300 nm) optical sources. Its lower loss also allows it to be used with optical drivers that deliver less power.

Multimode graded-index glass fiber propagates light by refraction (instead of reflection like step-index fibers). It is designed to correct for some modal dispersion that would otherwise occur with a step-index fiber. This allows much longer distances than multimode step-index fiber. It does not have the capability to correct for the chromatic dispersion that occurs with LED drivers. This media is also used with many shortwave LASER drivers.

Single-mode glass is the highest performance optical fiber. It is used for the highest data rates and longest distances. Such as the multimode graded-index fiber, it also operates by refraction. Because of its narrow 9-mm core diameter, this fiber is only usable with 1300-nm optical sources. This core diameter also requires very high-tolerance connectors to insure proper alignment.

A fifth type of optical fiber has recently been developed, but is not yet in common use. This fiber is known as Graded-Index Plastic Optical Fiber or GIPOF. This fiber corrects for modal dispersion and offers the promise of longer link lengths with a plastic media, while preserving the simple assembly characteristics of step-index POF.

Optical Receivers

An optical receiver converts optical pulses into electrical pulses. In these receivers, light is detected by a PIN photodiode. The changes in light cause small changes in current through the photodiode. These current changes are then converted to voltage changes in a transimpedance preamplifier, followed by multiple limiter gain stages to convert the weak signal to full digital levels.

The limiter stages of optical receivers are either AC-coupled or direct coupled. The selection of the coupling type is based primarily on the type of data that the receiver must deal with. With scrambled interfaces that may contain long runs of ones or zeros, the optical receiver must be direct coupled. This requires the fiber-optic receiver to detect DC levels or edges to determine the proper logic state during these long periods of inactivity.

Unfortunately, direct-coupled optical receivers suffer from numerous drawbacks. Direct coupling decreases the sensitivity of a digital fiber-optic receiver, since it allows low-frequency flicker noise from amplifiers to be presented to the receiver's comparator input. Any undesired signals coupled to the comparator reduce the signal-to-noise ratio (SNR) at this critical point in the circuit, and reduce the sensitivity of the fiber-optic receiver.

When operated with encoded data, the receiver's PIN pre-amplifier should be AC-coupled to a limiting amplifier and comparator as shown in Figure 1. AC-coupled fiber-optic receivers tend to be lower in cost, much simpler to design, provide better sensitivity, and contain fewer components than their direct-coupled counterparts. Another problem associated with direct-coupled receivers is the accumulation of DC-offset. With direct coupling, the receiver's limiter stages amplify the effects of undesirable offsets and voltage drifts due to temperature changes or aging. These amplified offsets are eventually applied to the comparator and result in reduced sensitivity of the fiber-optic receiver and can appear as duty cycle distortion (DCD). Problems with DC-offset can be avoided by constructing the receiver as shown in Figure 1.

Advantages of Encoded Run-Limited Data

As the data rate of a fiber-optic link increases, the reasons for encoding the data become very compelling. The encoded characters which replace the original data characters are selected so that the encoded data is compatible with simple, highly sensitive, AC-coupled fiber-optic receivers. Encoding enables the construction of optimal fiber-optic receivers which are limited by the random noise inherent in the receiver's first amplifier stage. Optimal noise-limited AC-coupled receivers can provide very low error-rates in applications with long optical fibers.

Figure 1. Simplified +5 Volt ECL (PECL) Compatible Fiber-Optic Receiver Block Diagram for High Data Rate Applications with Encoded Data

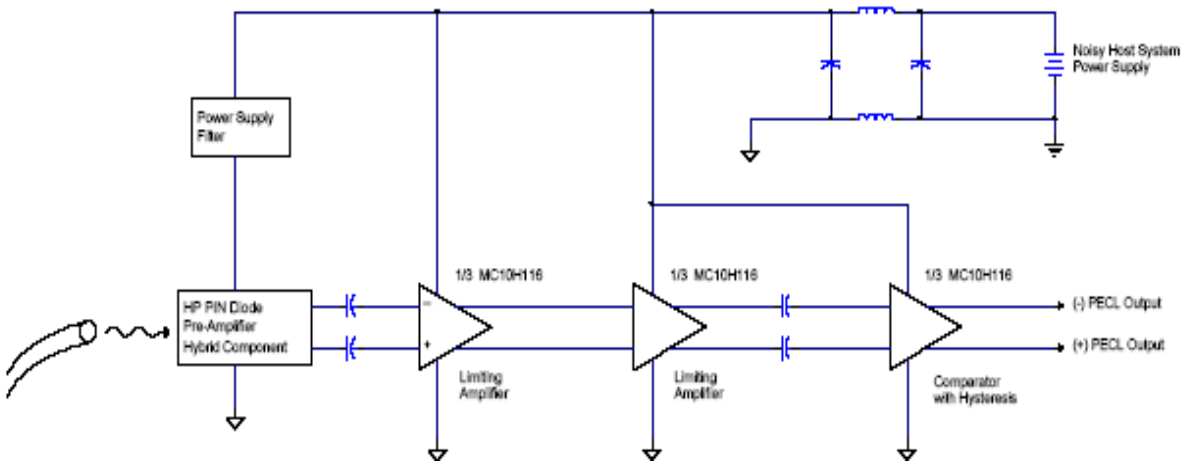

Optical Link Design

The CY7B923/933 HOTLink transmitter and receiver are designed to interface to optical components at PECL (Positive ECL) signal levels. These signal levels are used by all manufacturers of high-speed optical modules. Guidelines for interconnecting HOTLink to optical modules are located in the "*CY9266 HOTLink Evaluation Board User's Guide*".

Only One Transceiver Design Needed

The schematics and artwork in this application note document a fiber-optic transceiver design that can accept various Hewlett Packard LED transmitters and PIN-diode pre-amplifiers. This transceiver both provides and accepts differential PECL signal levels and is directly compatible with HOTLink. This transceiver design may be embedded into a wide range of products to provide very low-cost data communication solutions. To simplify the integration of this transceiver into HOTLink-based communications links, the complete fabrication artwork for the fiber-optic transceiver is available as a self extracting archive (Gerber photoplot and drill files) from http://www.hp.com/.

Distances Limits at 160 MBaud Signaling Rate

The simple transceiver design recommended in this application note can be used to address a very wide range of distances and system cost targets. While the focus of this application note is on the 50-meter POF transceiver highlighted in Table 2, alternate combinations of optical fiber and fiber-optic transceiver components in this same table can be used to address specific link requirements. Transceivers based on these components require no adjustments when operated within the distance ranges listed in Table 2.

Without changing the form-factor or printed circuit design, the fiber-optic transceiver documented in this application note may be populated with alternate component sets that can communicate over:

- Large-core step-index POF
- Step-index HCS fiber
- Multimode graded-index glass fiber
- Single-mode glass fiber

This makes this single design suitable for an extremely wide range of data communication applications.

Table 2. Low Cost Optical Components Compliant With Figure 4

Transmitter Part #	Receiver Part #	Optical Wavelength	Fiber Diameter	Transmission Mode	Media Type	Distance @160 MBaud
HFBR-15X7	*HFBR-25X6*	*650 nm*	*1 mm plastic*	*multimode*	*step index NA=0.35 plastic*	*2m to 50m*
HFBR-15X7	HFBR-25X6	650 nm	200 µm HCS	multimode	step index NA = 0.37 plastic clad glass	2m to 50m
HFBR-14X2	HFBR-24X6	820 nm	200 µm HCS	multimode	step index NA = 0.37 plastic clad glass	2m to 50m
HFBR-14X2	HFBR-24X6	820 nm	62.5/125 µm	multimode	graded index glass	2m to 600m
HFBR-13X2	HFBR-23X6	1300 nm	62.5/125 µm	multimode	graded index glass	2m to 2 km
HFBR-1315	HFBR-2315	1300 nm	9/125 µm	single-mode	step index glass	2m to 5 km

Safety

The HFBR-15X7 LED-based optical transmitter meets IEC-825-1 Class 1 safety standards for optical sources. That means that it poses little or no hazard to human vision and that no external or special measures are required for eye protection.

Simple PECL Compatible LED Transmitter

A high-performance low-cost PECL-compatible fiber-optic transmitter design is shown in Figure 2. This design looks deceptively simple but has been highly developed to deliver the best performance achievable with a wide range of Hewlett Packard LED transmitters. The recommended driver for the LED is also very inexpensive, since the 74ACTQ00 gate used to current modulate the various optical transmitters. When used with the recommended component values listed in Table 3, the transmitters and receivers listed in Figure 2 can be used to address a wide range of applications.

Simple High Sensitivity PECL Compatible Receiver

A very simple PECL-compatible receiver, with excellent sensitivity and suited for a wide range of applications, is shown in Figure 3. A single low cost 10H116 ECL line receiver is used to amplify and digitize the output of the Hewlett Packard PIN-diode pre-amplifier component, which functions as the receiver's first stage. The third section of the 10H116 integrated circuit is configured to provide hysteresis such that when no light is applied to the optical detector, the digital output of the receiver does not chatter.

Figure 2. +5 V ECL (PECL) Compatible 160 MBd Fiber-Optic Transmitter

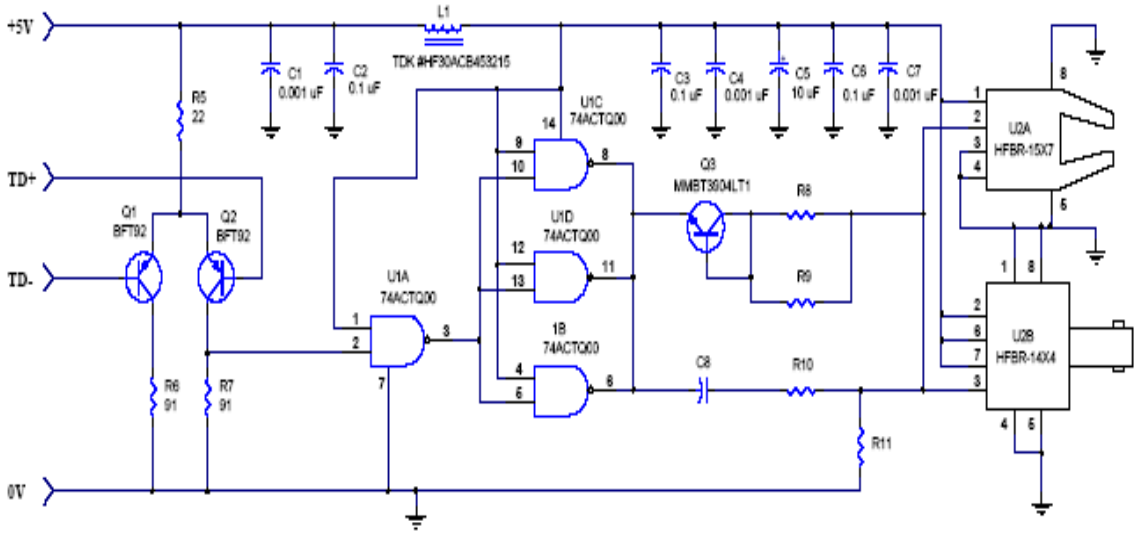

Figure 3. +5 V ECL (PECL) Compatible 160 MBd Fiber-Optic Receiver

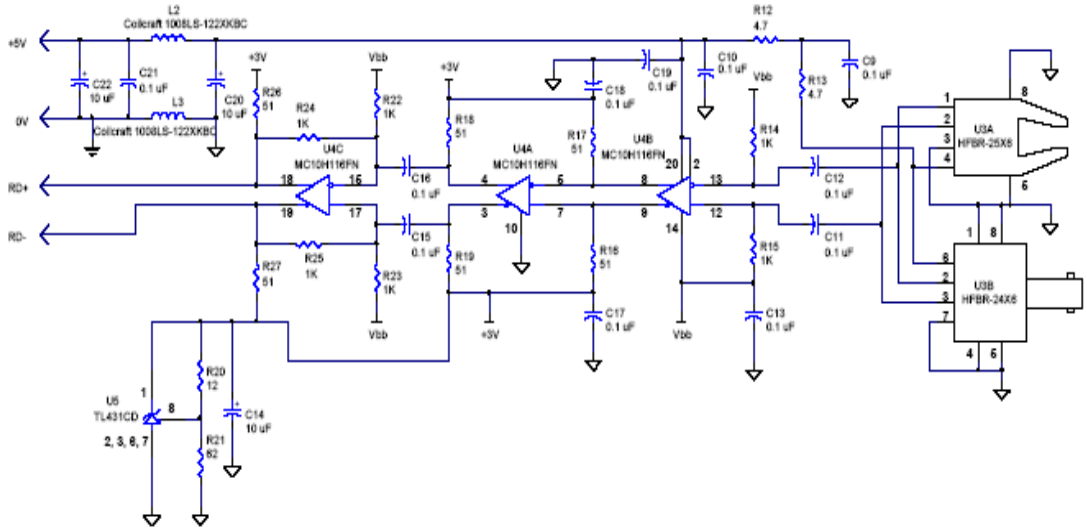

Table 3. Optical Driver Component Values

Transmitter, Fiber Type	R8/R9	R10	R11	C8
HFBR-15X7 1 mm Plastic	*301Ω*	*15Ω*	*1kΩ*	*43 pF*
HFBR-15X7 200 µm HCS	82.5Ω	15Ω	475Ω	120 pF
HFBR-14X2 200 µm HCS	300Ω	82Ω	2.2kΩ	18 pF
HFBR-14X4 62.5/125 µm	84.5Ω	56Ω	2.2kΩ	33 pF
HFBR-13X2 62.5/125 µm	78.7Ω	47Ω	∞	56 pF
HFBR-13X5 9/125 µm	53.6Ω	33Ω	1.2kΩ	56 pF

A Complete Fiber-Optic Transceiver Solution

Figure 4 shows the schematic for a complete fiber-optic transceiver. This transceiver may be constructed on a 1" x 1.97" printed circuit board, using surface mount components. When this transceiver is operated at 160 MBaud through 50 m of 1 mm diameter plastic optical fiber (numerical aperture of 0.35), it provides a typical eye opening of 3.6 ns with very lowerror rates.

Designers interested in inexpensive optical links are encouraged to embed the complete fiber-optic transceiver described in Figure 4 into their products. This design matches the electrical functions of industry standard 1X9 transceiver modules, except for the lack of a signal detect output. Since the HOTLink receiver RVS output provides a direct indication of link transmission errors, and can therefore be used to qualify a link, this status indicator is not generally necessary.

For those designs that do require a signal detect output, the 10H116 can be replaced by a ML6622 at only slightly higher link cost. The schematic and artwork for this modified receiver can be found in the Hewlett Packard application note 1123.

The design in Figure 4, when implemented on the board layout documented in Appendix B. Printed Circuit Artwork, can be directly inserted into boards designed for industry standard fiber-optic transceiver modules with a 1X9 footprint (including the HOTLink CY9266-F evaluation board) and used as a lower-cost alternative in industrial, medical, telecom, and proprietary data communication applications.

Error Rates and Noise Immunity

The probability that a fiber-optic link will make an error is related to the optical receiver's own internal random noise, its ability to reject noise originating from the system in which it is installed, and the jitter tolerance of the clock and data recovery (CDR) circuit. The total noise present in any fiber-optic receiver is normally the sum of the PIN diode, preamplifier, and the host system's electrical noise.

Figure 4. Lowest Cost 160 MBaud Fiber-Optic Transceiver

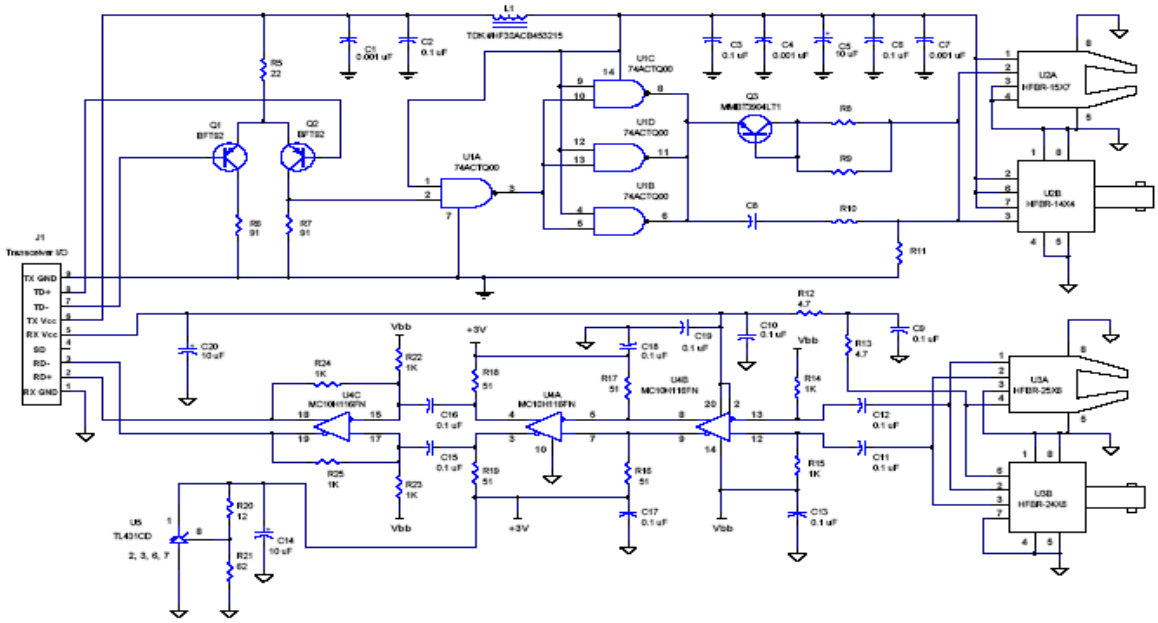

Figure 5. Receiver Signal-to-Noise Ratio vs. Probability of Error (BER)

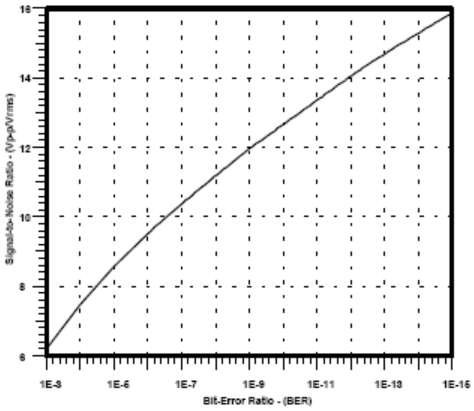

As the optical signal applied to the receiver increases, the probability that the receiver's total noise will alter the data decreases. Small increases in the receiver's SNR result in a very sharp reduction in the probability of error. Figure 5 shows that the receiver's probability of error is reduced by six orders of magnitude from 1x10–9 to 1x10–15 when the receiver's signal-to-noise ratio improves from 12:1 to 15.8:1.

At any fixed temperature, the total of the receiver's random noise (flicker, thermal, shot) and the host system's noise can be assumed to be a constant. While the most obvious way to reduce the probability of an error is to increase the amplitude of the optical signal applied to the receiver, a less obvious technique is to improve the receiver's ability to reject electrical noise from the system. The fiber-optic receivers documented in this application note have sufficient noise immunity to be used in most systems without electrostatic shielding. The Hewlett Packard PIN-diode preamplifiers (used in the receiver's first stage) are physically small hybrid circuits, and do not function as particularly effective antennas. For extremely noisy applications, Hewlett Packard offers PIN diode preamplifiers in electrically conductive plastic or all metal packages. The overwhelming majority of the fiber-optic applications do not require conductive plastic or metal receiver housings.

Signal Terminations and Power Supply Filtering Requirements

The most overlooked source of noise is usually the host system's power supply. This supply normally powers the fiber-optic receiver, the fiber-optic transmitter, the serializer, CDR, deserializer, and a system comprised of relatively noisy digital circuits. The simple and inexpensive power supply filter in Figure 6 has been proven to work in a wide range of system applications. A filter of this type is normally sufficient to protect the fiber-optic receiver from very noisy host systems.

Figure 6. Recommended Power Supply Filter and +5 V ECL (PECL) Signal Terminations for the Cypress HOTLink

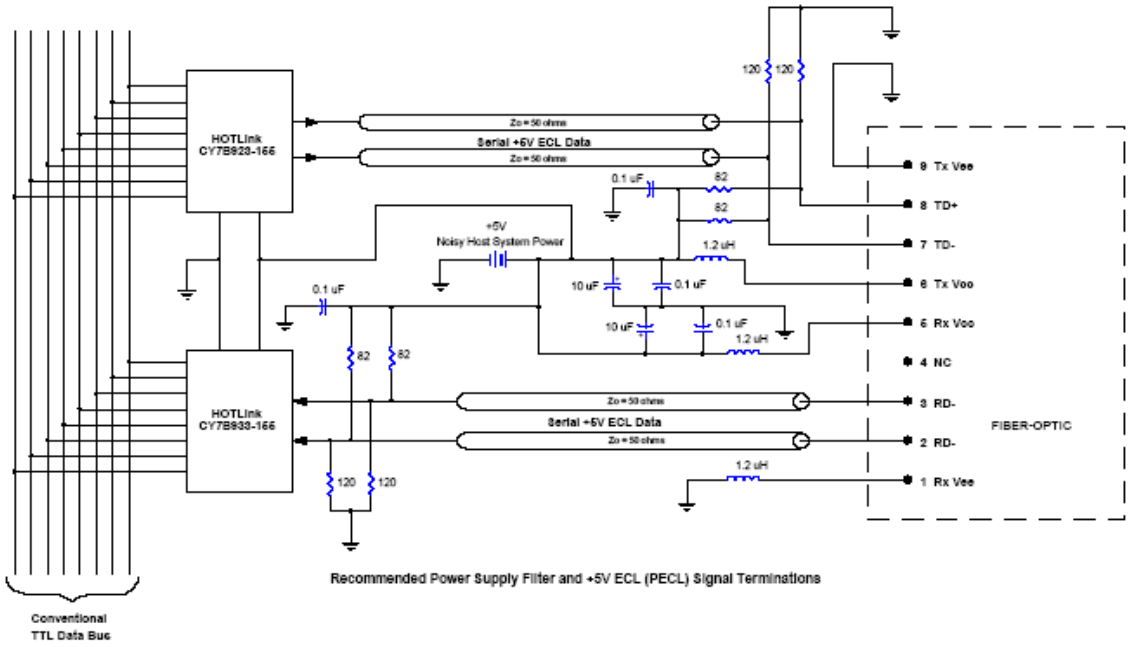

When used with HOTLink, the power supply filter and terminations shown in Figure 6 are recommended. In this environment, the transceiver in Figure 4 has been proven to provide excellent performance. The capacitor values are chosen based on series resonance considerations as discussed in the Cypress application note *AN1032 - Using Decoupling Capacitors*.

Printed Circuit Artwork

The performance of any fiber-optic transceiver is partially dependent on the layout of the printed circuit board on which the transceiver is constructed. To achieve the link performance listed in Table 2 for the transceiver shown in Figure 4, designers are encouraged to embed the printed circuit artwork provided in Appendix B. Printed Circuit Artwork of this application note.

Parts List

The PECL-compatible fiber-optic transceiver documented in this application note is simple, inexpensive, and uses only a few external components. For those interested in implementing this transceiver design, a complete parts list is provided in Appendix A. Parts List. All of the components listed in the parts list were selected to assure that they are compatible with the artwork shown in Appendix B. Printed Circuit Artwork.

Plastic Optical Cables

Plastic optical fiber cables are both low in cost and simple to assemble. An individual connector can be assembled in around 45 seconds. The optical fiber is protected by a jacket that makes it durable and resistant to damage. The normal mechanical stresses encountered during installation, or the limited mechanical movement of usage, have little effect on its performance.

The assembly of plastic fiber-optic cables requires no complex crimping tools or polishing techniques. The assembly of the duplex Hewlett Packard HFBR-4531 connector for POF is described in Appendix C. Assembly of POF Connectors and Cables. These same connectors may be used for simplex fiber links, with minor changes to the assembly process. Additional information on these connectors is available through Hewlett Packard.

Conclusion

The fiber-optic transceiver design documented in this application note can be used to implement data communication links that operate at high data rates and provide better noise immunity than is possible with copper cables. When fiber-optic media and transceivers are used in place of conventional copper cable alternatives, it is possible to build industrial, medical, telecom, or proprietary communication links with much higher tolerance for noise transients (caused by utility power switch gear, motor drives, lightning strikes, and so on), while emitting no EMI, RFI, or other electrical disturbance of their own.

These same low-cost optical transceivers can be coupled with HOTLink as a general replacement for both serial and parallel copper interfaces. When used with plastic optical fiber, the cost for the entire solution is competitive with copper implementations. By embedding the solution shown in this application note, designers can quickly develop high-speed noise-immune optical communication links with minimal development costs.

References

1. Cypress Semiconductor Application Note, AN1130, "Interfacing the CY7B923 and CY7B933 (HOTLink) to Clocked FIFOs"
2. Cypress Semiconductor Application Note, AN1032, "Using Decoupling Capacitors"
3. CY9266 HOTLink™ Evaluation Board User's Guide
4. Hewlett Packard application bulletin 78, "Low Cost Fiber-Optic Links for Digital Applications up to 155 MBd"
5. Hewlett Packard Technical Data, "Plastic Optical Fiber and HCS Fiber Cable and Connectors for Versatile Link"
6. Hewlett Packard Technical Data, "Crimpless Connectors for Plastic Optical Fiber and Versatile Link"
7. Hewlett Packard Application Note 1123, "Inexpensive 20 to 160 MBd Fiber-Optic Solutions for Industrial, Medical, Telecom, and Proprietary Data Communication Applications"
8. Hewlett Packard Application Note 1066, "Fiber-Optic Solutions for 125 MBd Data Communication Applications at Copper Wire Prices"

Appendix A. Parts List

Designator	Value	Part Type	Package	Material	Part Number	Qty.	Mfgr.
C1, C4, C7	0.001 µF	Capacitor	0805	NP0/C0G		3	
C2, C3, C6, C9, C10, C11, C12, C13, C15, C16, C17, C18, C19	0.1 µF	Capacitor	0805	X7R or better		13	
C5, C14, C20	10 µF	Capacitor	B	Tantalum, 10V		3	
C8	See *Table 3*	Capacitor	0805	NP0/C0G		1	
U1	Quad NAND	IC, CMOS	SO14		74ACTQ00	1	
U2	Transmitter	Optical			See *Table 2*	1	HP
U3	Receiver	Optical			See *Table 2*	1	HP
U4	Line RX	IC, ECL	PLCC-20		MC10H116FN	1	Motorola
U5	Voltage Regulator	IC, Linear	SO-8		TL431CD	1	T.I.
L1	CB70-1812	Inductor	1812		HF30ACB453215	1	TDK
R12, R13	4.7Ω	Resistor	0805	5%		2	
R20	12Ω	Resistor	0805	5%		1	
R10	See *Table 3*	Resistor	0805	5%		1	
R5	22Ω	Resistor	0805	5%		1	
R16, R17, R18, R19	51Ω	Resistor	0805	5%		4	
R21	62Ω	Resistor	0805	5%		1	
R8, R9	See *Table 3*	Resistor	0805	1%		2	
R6, R7	91Ω	Resistor	0805	5%		2	
R11	See *Table 3*	Resistor	0805	1%		1	
R14, R15, R22, R23, R24, R25	1 kΩ	Resistor	0805	5%		6	
Q1, Q2		Transistor	SOT-23		BFT92	2	Philips
Q3		Transistor	SOT-23		MMBT3904LT1	1	Motorola
J1		Pins			343B	9	McKenzie

Appendix B. Printed Circuit Artwork

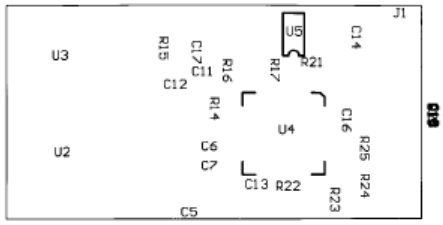

Top Overlay

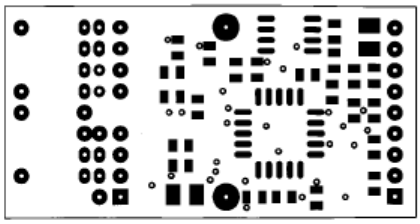

Top Solder Mask

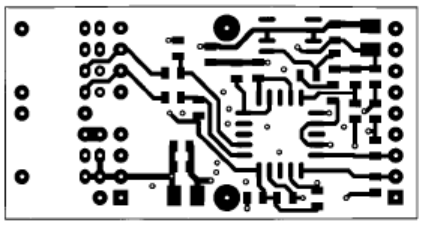

Top Layer

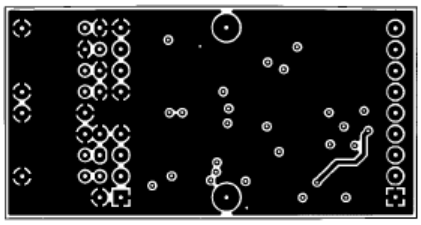

Mid Layer 2 RX_VEE

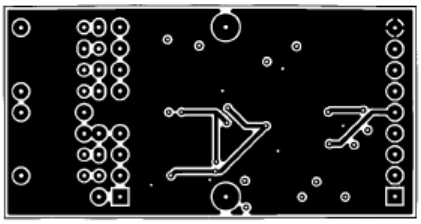

Mid Layer 3 TX_VEE

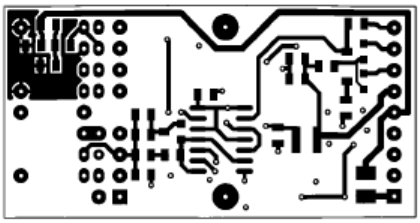

Bottom Layer

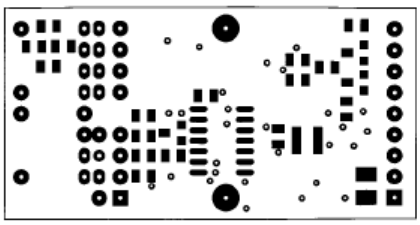

Bottom Solder Mask

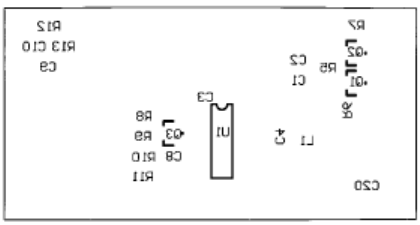

Bottom Overlay

Appendix C. Assembly of POF Connectors and Cables

Assembly of POF Connectors and Cables

POF media and connectors are both low in cost and very simple to assemble. The Hewlett Packard HFBR-4531 connector documented here may be used for either simplex or duplex cable assemblies. The following instructions are primarily for a duplex (two-fiber) assembly.

Figure 7. HP Duplex Crimpless POF Connector



Only limited supplies or tools are needed to assemble a POF cable:

- Plastic optical cable
- Wire cutters or scissors
- 16 gauge (AWG) wire strippers
- Hewlett Packard Crimpless POF connectors (Figure 7)Hewlett Packard polishing tool (Figure 8)
- 600-grit abrasive paper

Figure 8. Fiber Polishing Fixture



Step 1: Stripping the Fiber

After separating the two jacketed fibers by 100–150 mm (4–6 inches), use the wire strippers to remove approximately 7 mm (0.3 inches) of the fiber jacket. For a duplex assembly, both fibers should be stripped approximately the same amount. The stripped fiber is shown in Figure 9.

Figure 9. Fiber With Jacket Removed



Step 2: Putting on the Connector

The HFBR-4531 connector is a hermaphroditic assembly that allows two simplex connectors to be used to make a duplex connector. Insert each fiber into the ferrule of a connector-half until the fiber jacket stops it. This is shown in Figure 10. The fiber should protrude at least 1.5 mm (0.06 inches) beyond the end of the ferrule.

Next the two connector halves are assembled to each other. This locks the fibers in place prior to finishing the ends of each fiber. Place one connector-half on top of the other so that the non-ferrule half of each connector is over the ferrule half of the opposite connector-half.

Manually press the connector-halves together over the center of each fiber. Secure the fiber by latching the connector halves together.

Figure 10. Fibers Inserted Into Connector Ferrules



Figure 11. Assembled Duplex Connector

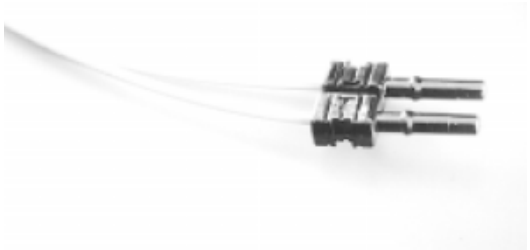

Step 3: Trimming and Polishing

Any fiber protruding more than 1.5 mm (0.06 inches) from the connector end should be trimmed off with a pair of scissors or cutters (Figure 11) then insert the connector into the polishing fixture with the trimmed fiber protruding from the bottom of the fixture as shown in Figure 12. Press the polishing tool down on the 600-grit abrasive paper and polish the fiber using a figure eight motion as shown in Figure 13.

Figure 12. Assembled Connector and Polishing Fixture

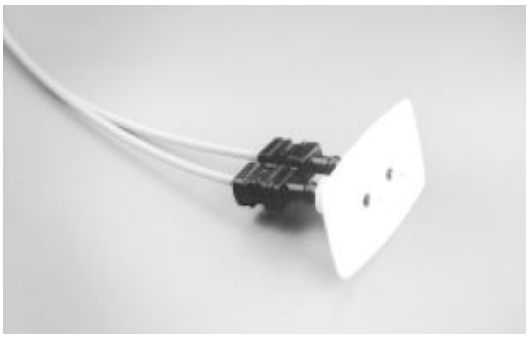

Figure 13. Fiber Polishing

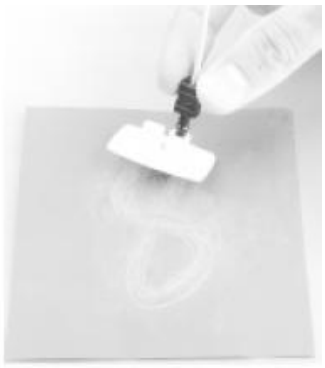

Step 4: Finishing

Additional polishing on Hewlett Packard 3 mm pink lapping- film can achieve a 2 dB improvement over just 600-grit abrasive paper (Figure 13).

Figure 14. Finished Connector Assembly



Document History

Document Title: Replacing Wire with Inexpensive Plastic Fiber Solutions - AN1077

Document Number: 001-42045

Revision	ECN	Orig. of Change	Submission Date	Description of Change
**	1600125	SAAC	10/11/2007	New Spec.
*A	3388959	SAAC	09/29/2011	Technical edits and template update.
*B	4545990	YLIU	10/20/2014	Sunset Review Updated Template
*C	5836778	AESATP12	08/04/2017	Updated logo and copyright.

Worldwide Sales and Design Support

Cypress maintains a worldwide network of offices, solution centers, manufacturer's representatives, and distributors. To find the office closest to you, visit us at Cypress Locations.

Products

ARM® Cortex® Microcontrollers	cypress.com/arm
Automotive	cypress.com/automotive
Clocks & Buffers	cypress.com/clocks
Interface	cypress.com/interface
Internet of Things	cypress.com/iot
Memory	cypress.com/memory
Microcontrollers	cypress.com/mcu
PSoC	cypress.com/psoc
Power Management ICs	cypress.com/pmic
Touch Sensing	cypress.com/touch
USB Controllers	cypress.com/usb
Wireless Connectivity	cypress.com/wireless

PSoC® Solutions

PSoC 1 | PSoC 3 | PSoC 4 | PSoC 5LP | PSoC 6

Cypress Developer Community

Forums | WICED IOT Forums | Projects | Videos | Blogs | Training | Components

Technical Support

cypress.com/support

All other trademarks or registered trademarks referenced herein are the property of their respective owners.

Cypress Semiconductor
198 Champion Court
San Jose, CA 95134-1709

© Cypress Semiconductor Corporation, 2007-2017. This document is the property of Cypress Semiconductor Corporation and its subsidiaries, including Spansion LLC ("Cypress"). This document, including any software or firmware included or referenced in this document ("Software"), is owned by Cypress under the intellectual property laws and treaties of the United States and other countries worldwide. Cypress reserves all rights under such laws and treaties and does not, except as specifically stated in this paragraph, grant any license under its patents, copyrights, trademarks, or other intellectual property rights. If the Software is not accompanied by a license agreement and you do not otherwise have a written agreement with Cypress governing the use of the Software, then Cypress hereby grants you a personal, non-exclusive, nontransferable license (without the right to sublicense) (1) under its copyright rights in the Software (a) for Software provided in source code form, to modify and reproduce the Software solely for use with Cypress hardware products, only internally within your organization, and (b) to distribute the Software in binary code form externally to end users (either directly or indirectly through resellers and distributors), solely for use on Cypress hardware product units, and (2) under those claims of Cypress's patents that are infringed by the Software (as provided by Cypress, unmodified) to make, use, distribute, and import the Software solely for use with Cypress hardware products. Any other use, reproduction, modification, translation, or compilation of the Software is prohibited.

TO THE EXTENT PERMITTED BY APPLICABLE LAW, CYPRESS MAKES NO WARRANTY OF ANY KIND, EXPRESS OR IMPLIED, WITH REGARD TO THIS DOCUMENT OR ANY SOFTWARE OR ACCOMPANYING HARDWARE, INCLUDING, BUT NOT LIMITED TO, THE IMPLIED WARRANTIES OF MERCHANTABILITY AND FITNESS FOR A PARTICULAR PURPOSE. To the extent permitted by applicable law, Cypress reserves the right to make changes to this document without further notice. Cypress does not assume any liability arising out of the application or use of any product or circuit described in this document. Any information provided in this document, including any sample design information or programming code, is provided only for reference purposes. It is the responsibility of the user of this document to properly design, program, and test the functionality and safety of any application made of this information and any resulting product. Cypress products are not designed, intended, or authorized for use as critical components in systems designed or intended for the operation of weapons, weapons systems, nuclear installations, life-support devices or systems, other medical devices or systems (including resuscitation equipment and surgical implants), pollution control or hazardous substances management, or other uses where the failure of the device or system could cause personal injury, death, or property damage ("Unintended Uses"). A critical component is any component of a device or system whose failure to perform can be reasonably expected to cause the failure of the device or system, or to affect its safety or effectiveness. Cypress is not liable, in whole or in part, and you shall and hereby do release Cypress from any claim, damage, or other liability arising from or related to all Unintended Uses of Cypress products. You shall indemnify and hold Cypress harmless from and against all claims, costs, damages, and other liabilities, including claims for personal injury or death, arising from or related to any Unintended Uses of Cypress products.

Cypress, the Cypress logo, Spansion, the Spansion logo, and combinations thereof, WICED, PSoC, CapSense, EZ-USB, F-RAM, and Traveo are trademarks or registered trademarks of Cypress in the United States and other countries. For a more complete list of Cypress trademarks, visit cypress.com. Other names and brands may be claimed as property of their respective owners.