AN080

Interfacing the Hotlink II™ Transceiver with the 3.3 V Gennum GS1524 Equalizer and GS1528 Cable Driver for Digital Video

Author: Roy Liu
Associated Project: No
Associated Part Family: CYV15G0101DXB, CYV15G0401DXB
Software Version: NA
Related Application Notes: None

This application note shows how to interface the Hotlink II transceiver with the 3.3 V Gennum GS1524 equalizer and GS1528 cable driver for the SMPTE SDI and DVB-ASI serial digital video links over copper.

Introduction

The HOTLink II™ transceiver is a point-to-point or point-to-multipoint communications building block allowing the transfer of data over high-speed serial links at signaling speeds ranging from 195 to 1500 MBaud. The device provides a selectable 8B/10B encoder/decoder and a Cypress mode multibyte framer that may be used for DVB-ASI applications. The encoding, decoding, and framing functions may be bypassed for SMPTE SDI transport.

Cable drivers are used in serial digital video systems to meet the 800 mV signal amplitude requirements found in the SMPTE 259M, 292M, and DVB-ASI specifications. Adaptive equalizers are used to reverse the eye-closing effects of frequency-dependent attenuation of copper interconnects. This application note explains how to interface the HOTLink II transceiver to the Gennum GS1524 adaptive cable equalizer and GS1528 cable driver for serial digital video applications over hundreds of meters of coaxial cable. All of the members of the HOTLink II video family, which includes the CYV15G0101DXB and CYV15G0401DXB that are compatible with Gennum's 3.3 V cable driver and adaptive equalizer chipset.

The HOTLink II video evaluation board uses the GS1524 and GS1528; the board was tested by transmitting SMPTE 259M data (SD-SDI) and DVB-ASI data over 300 m of Belden 8281 coaxial cable. The results of these tests are discussed in the section DVB-ASI Link Tests on page 6.

Block Diagrams

Figure 1 and Figure 2 show the block diagram of the connection of CYV15G0101DXB (HOTLink II PHY), the GS1524[1] (Gennum adaptive equalizer), and the GS1528[2] (Gennum cable driver). Although a single-channel device is shown in these figures, the same format is applicable to any device in the HOTLink II family, including dual-channel and quad-channel devices.

Figure 1 shows the block diagram for a SMPTE system in which the HOTLink II device's 8B/10B encoder, 10B/8B decoder, and framer are disabled, and the SMPTE scrambling, descrambling, and framing functions are provided by an external Cypress solution.

Figure 2 shows the block diagram for a DVB-ASI system in which the 8B/10B encoder, 10B/8B decoder and Cypress mode multi-byte framer are enabled. The non-SMPTE "CYP" devices may also be used in DVB-ASI systems.

[1] GS1524A is the replacement for GS1524. For proper termination and coupling refer to the GS1524A datasheet.

[2] GS1528A is the replacement for GS1528. For proper termination and coupling refer to the GS1528A datasheet.

Figure 1. Typical Block Diagram of the Physical Layer in a SMPTE SDI Video System

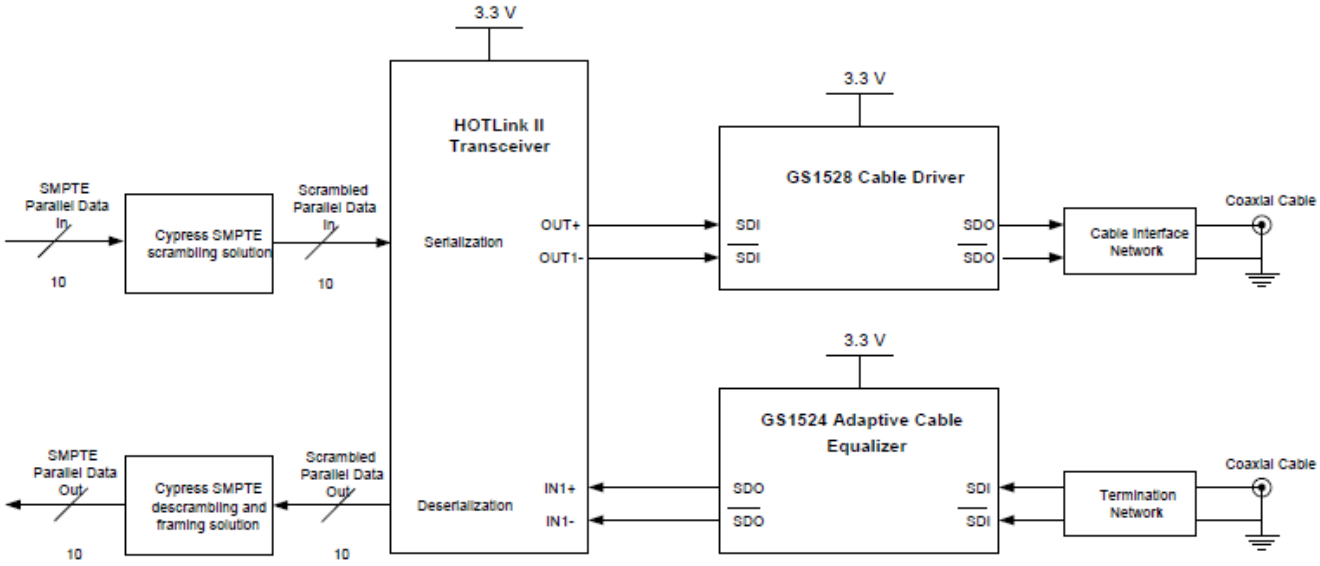

Figure 2. Typical Block Diagram of the Physical Layer in a DVB-ASI Video System

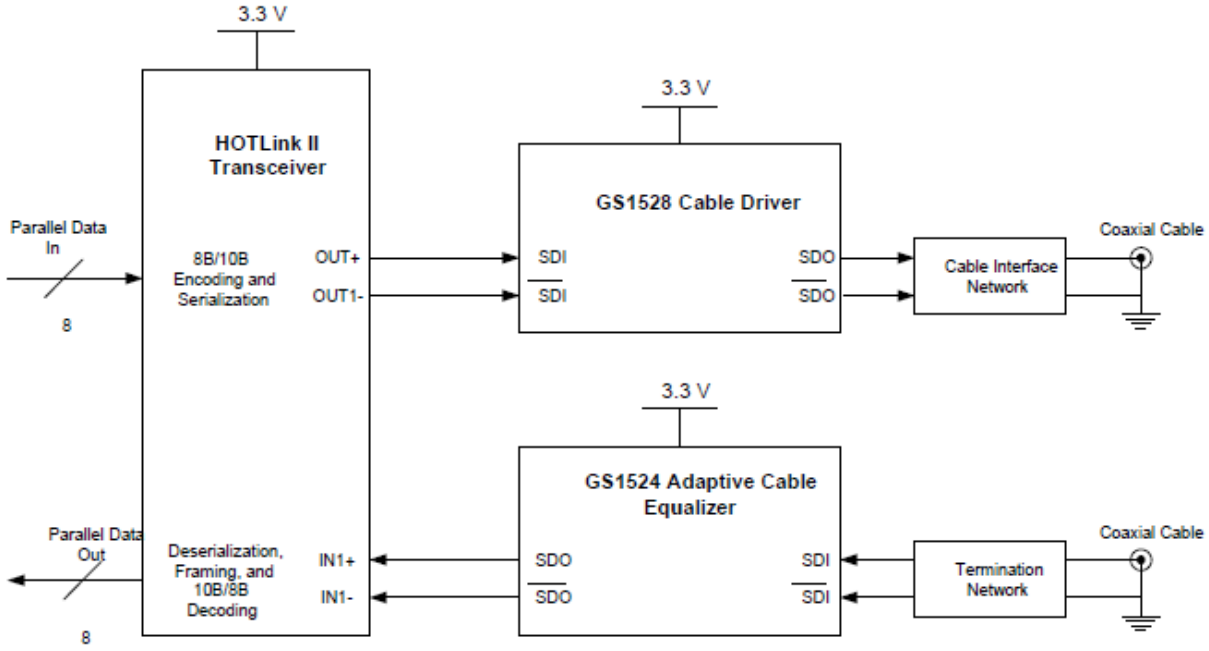

Schematic Diagrams

Figure 3 and Figure 4 show the schematic connections between the HOTLink II device and the GS1524 and the GS1528. Because these are all 3.3-V devices, they can be powered with a single supply.

Transmitting Data to the Coaxial Cable

For the SMPTE video, 10-bit parallel data is sent from the upstream logic. The HOTLink II device serializes the data and sends it to the GS1528 cable driver at a bit rate 10 times that of the parallel word rate. Cypress also offers solutions for implementing the SD-SDI and HD-SDI scrambler for interface with the HOTLink II device.

For the DVB-ASI video, an 8-bit parallel data is sent from the upstream logic at a rate of 27 MHz. The HOTLink II 8B/10B encoder must be enabled to transmit the associated 10-bit code word with correct disparity for each 8-bit input character or special character.

In all cases, the GS1528 provides the appropriate 800-mV amplitude swing at the signal outputs. Signals are coupled to the transmission line using capacitors. This is shown in Figure 3.

Design Considerations for the Interface between the HOTLink II Device and the GS1528

At the high data rates used to transmit SMPTE 292M (HD-SDI) data, it is important to control the trace impedances to minimize distortions caused by reflections. The following practices are recommended to ensure signal integrity. The component names refer to those shown in Figure 3.

R2 should be placed as close as possible to the SDI inputs on the GS1528.

High-speed traces should be curved to minimize impedance variations due to change of PCB trace width.

In addition to the recommendations listed here, Gennum specifies other guidelines in the GS1528 datasheet. The details provided by Gennum regarding board layout and the selection of R8, R10, L1, L2 and C5, C6 should also be considered when designing this system.

Figure 3. Schematic Diagram of the Connection of the Transmit Portion of the HOTLink II Transceiver with the GS1528 Cable Driver

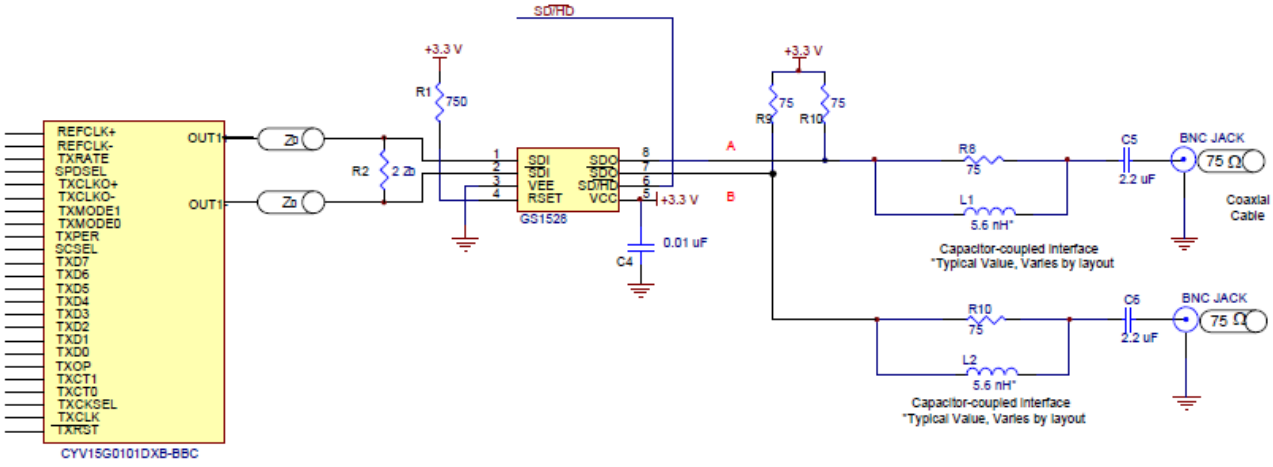

Receiving Data from a Coaxial Cable

Serial data received from a coaxial cable is coupled to the GS1524 adaptive equalizer using an appropriate terminating and coupling network. As with the cable driver, the adaptive equalizer should be coupled to the transmission line using capacitors. This is shown in Figure 4.

The equalizer opens the eye by reversing the effects of the frequency-dependent attenuation of the copper link. This equalized differential signal is then presented to the serial inputs of the HOTLink II device.

For SMPTE SD-SDI and HD-SDI systems, the data is placed on the HOTLink II device's 10-bit receive bus, along with a recovered clock (RXCLK) operating at 27 MHz and 148.5 MHz (or 148.5/1.001 MHz), respectively. The received parallel data is then delivered to a descrambler/framer. Cypress offers a descrambling and framing solution for both SD-SDI and HD-SDI.

For DVB-ASI systems, the received data is framed, decoded, and placed on the HOTLink II device's 8-bit receive bus along with a 27 MHz recovered clock. The deserialized data can also be clocked out with the local reference clock using the optional elasticity buffer in the HOTLink II receiver. When the elasticity buffer is enabled, K28.5 framing characters are inserted or deleted to/from the datastream to absorb the frequency difference between the two clock domains (recovered clock and reference clock). The framing is implemented using the Cypress mode multibyte framer, which frames on two instances of K28.5 having identical 10-bit boundaries in a space of 50 bits. This is optimized for DVB-ASI, which transmits two consecutive K28.5 characters between packets.

The RXST[2:0] bus indicates the presence of valid data and framing characters. The upstream logic decodes the signal on this bus to remove K28.5 characters from the data stream. See the HOTLink II device's datasheet for the interpretation of the RXST[2:0] bus.

Design Considerations for the Interface between the HOTLink II Device and the GS1524 Adaptive Equalizer

At the high data rates used to transmit SMPTE 292M (HD-SDI) data, it is important to control the trace impedances to minimize distortions caused by reflections. The following practices are recommended to optimize performance of the adaptive equalizer. The component names refer to those shown in Figure 4.

1. The traces connecting the HOTLink II inputs and equalizer outputs should have a uniform characteristic impedance of 50 W or 75 W. R18 should be twice the characteristic impedance of each line.
2. High-speed traces are curved to minimize impedance changes.
3. The components C15-C16, R14-R16 and L2 should be as close as possible to the SDI inputs on the GS1524.

In addition to the recommendations listed here, Gennum specifies other guidelines in the GS1524 datasheet. The details provided by Gennum regarding board layout and the selection of R13, R14, R15, C15, C16 and L2 should also be considered when designing this system. Refer to the schematics for the HOTLink II video evaluation board found in the HOTLink II Video Evaluation Board User's Guide.

Figure 4. Schematic Diagram of the Connection of the Receiver Portion of the HOTLink II Transceiver with the GS1524 Adaptive Cable Equalizer

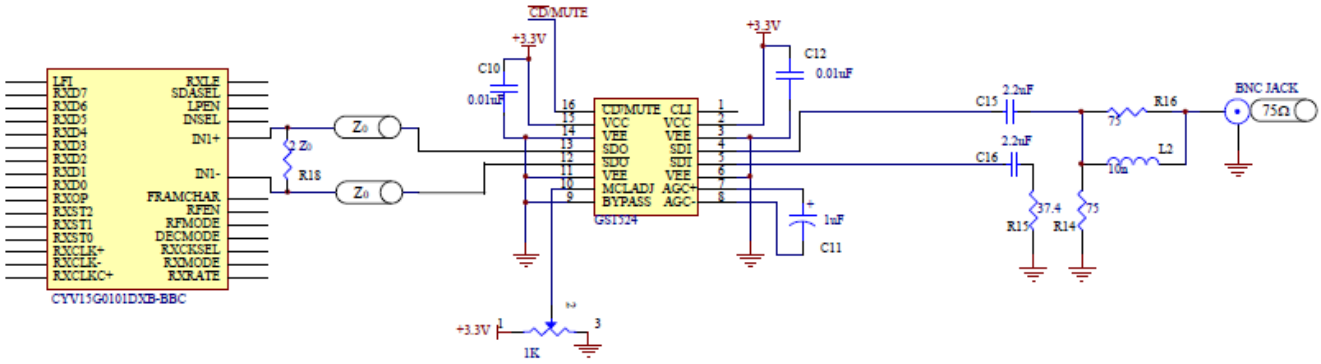

HOTLink II Video Evaluation Board Tests

The HOTLink II video evaluation board supports digital video transmission at SD-SDI and DVB-ASI rates. The following tests were run to evaluate the board's performance for SMPTE 259M and DVB-ASI.

SMPTE SD-SDI Pathological Tests

The HOTLink II video evaluation board [3] provides a test suite to check the serial pathological patterns defined in SMPTE EG-34. The first pathological condition could happen as often as once for each scan line; therefore, it was tested on each scan line. The two other pathological conditions typically occur on no more than one scan line per frame, so an occurrence rate of five lines per frame was tested for each of the pathological conditions as a stressing condition. Data was tested at the SD-SDI rate of 270 Mb/s. The setup is shown in Figure 5.

Pathological Serial Loopback Test 1: Runlength Test

The first pathological condition tests the run-length limit of the SMPTE scrambler. The scrambler is a run-length limited to 44 consecutive bits of the same parity. In this test, every scan line contains a series of 44 bits without a transition. This data was driven over 300m of Belden 8281 coaxial cable for 1 hour, 45 minutes without a single-bit error. A screenshot showing the Bit Error Rate (BER) and the elapsed time of the test is shown in Figure 6.

Pathological Serial Loopback Test 2: Equalizer Test

The second pathological condition tests the equalizer. Under the conditions specified in EG 34, the scrambler can output a scan line consisting of a repeating pattern of 19 bits of one parity followed by 1 bit of the opposite parity (19 '1's followed by a 0, or 19 '0's followed by a 1). In this test, five lines per frame consisted of this pathological condition. The data was driven over 300m of Belden 8281 coaxial cable for 1 hour, 45 minutes without a single bit error.

Pathological Serial Loopback Test 3: PLL Test

The third pathological condition tests the clock recovery PLL of the serial receiver, located in the CYV15G0101DXB. Under the conditions specified in EG 34, the scrambler can output a scan line consisting of a repeating pattern of 20 bits of one parity followed by 20 bits of the opposite parity (20 highs followed by 20 lows). This pattern is used to test the performance of the CDR PLL and its ability to maintain lock for long periods of data with a low transition density. The data was driven over 300m of Belden 8281 coaxial cable for 1 hour, 45 minutes without a single-bit error.

[3] The Hotlink II video evaluation board is obsolete; use the Hotlink II device for implementation on customize board.

Figure 5. HOTLink II Video Evaluation Board Driving 300 m of Belden 8281 Cable

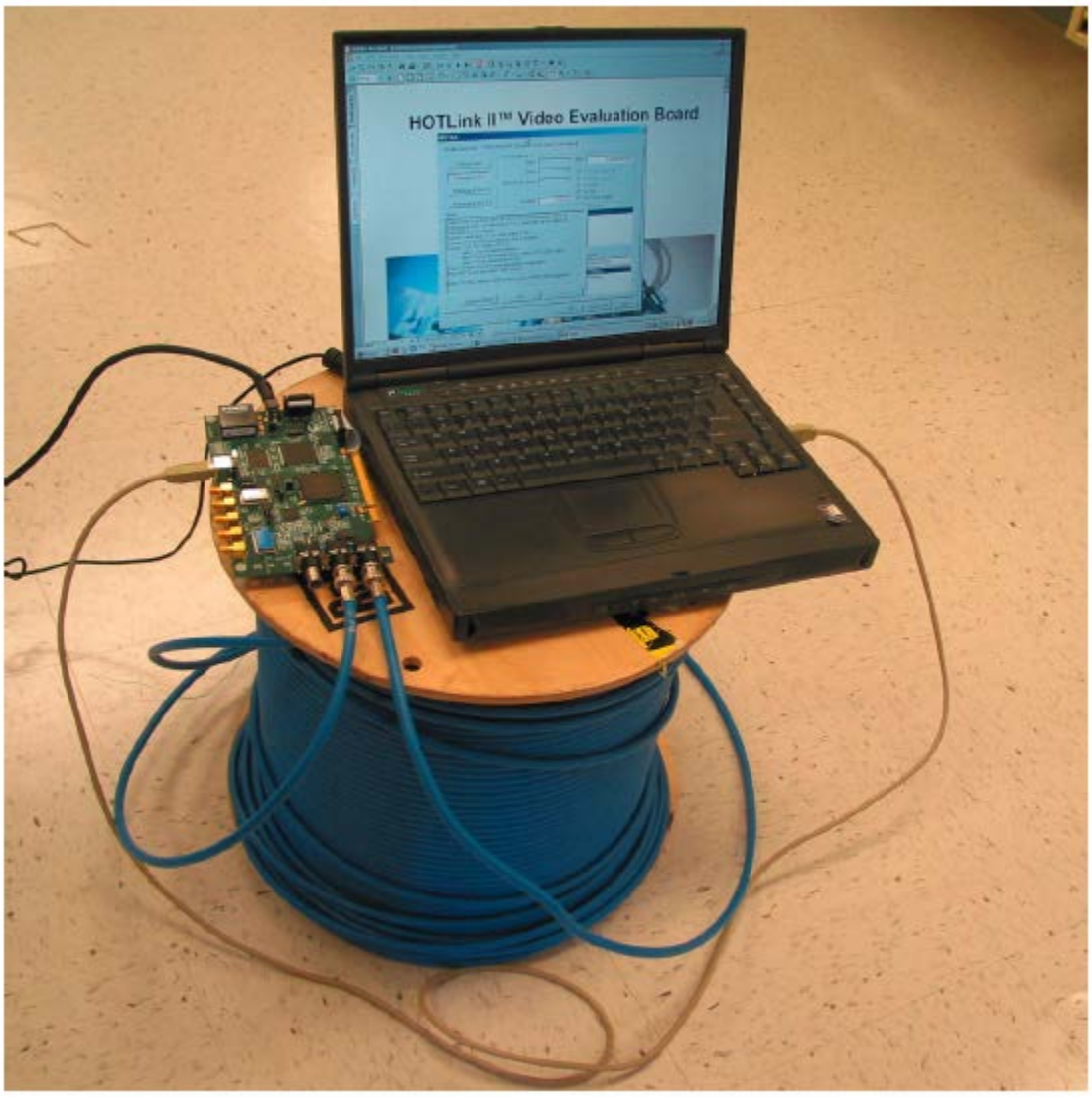

DVB-ASI Link Tests

In this test, two HOTLink II video evaluation boards were used to test the functionality of a DVB-ASI link. A Linear Systems DVB master board was used to transmit and test DVB-ASI data. The HOTLink II video evaluation boards were placed in DVB-ASI parallel loopback mode, and the data was transmitted over 300m of Belden 8281 cable. The signaling rate was 270 Mbaud, of which 150 Mb/s consisted of actual data packets. The rest of the bandwidth was taken up by K28.5 framing and stuffing characters. The test was run for 90 minutes and, over that time, the link had no errors. The setup is show in Figure 7.

Figure 6. User Interface Showing Results of Run-Length Pathological Test

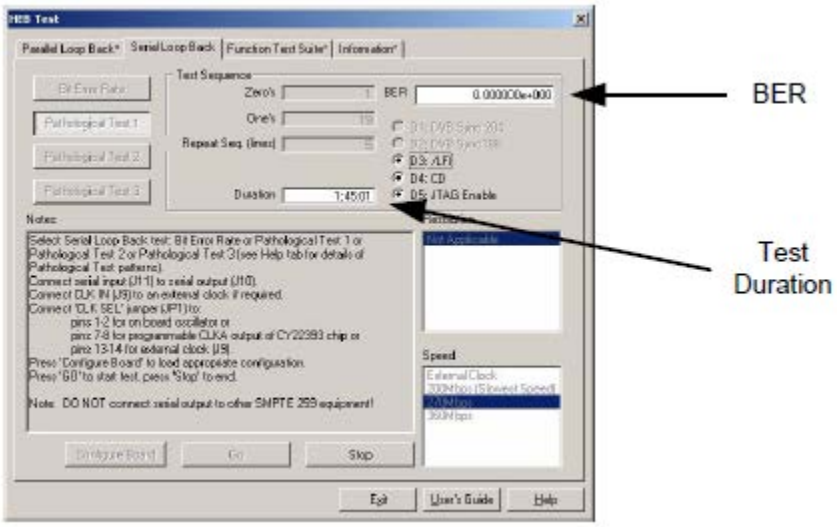

Figure 7. VB-ASI Link Test

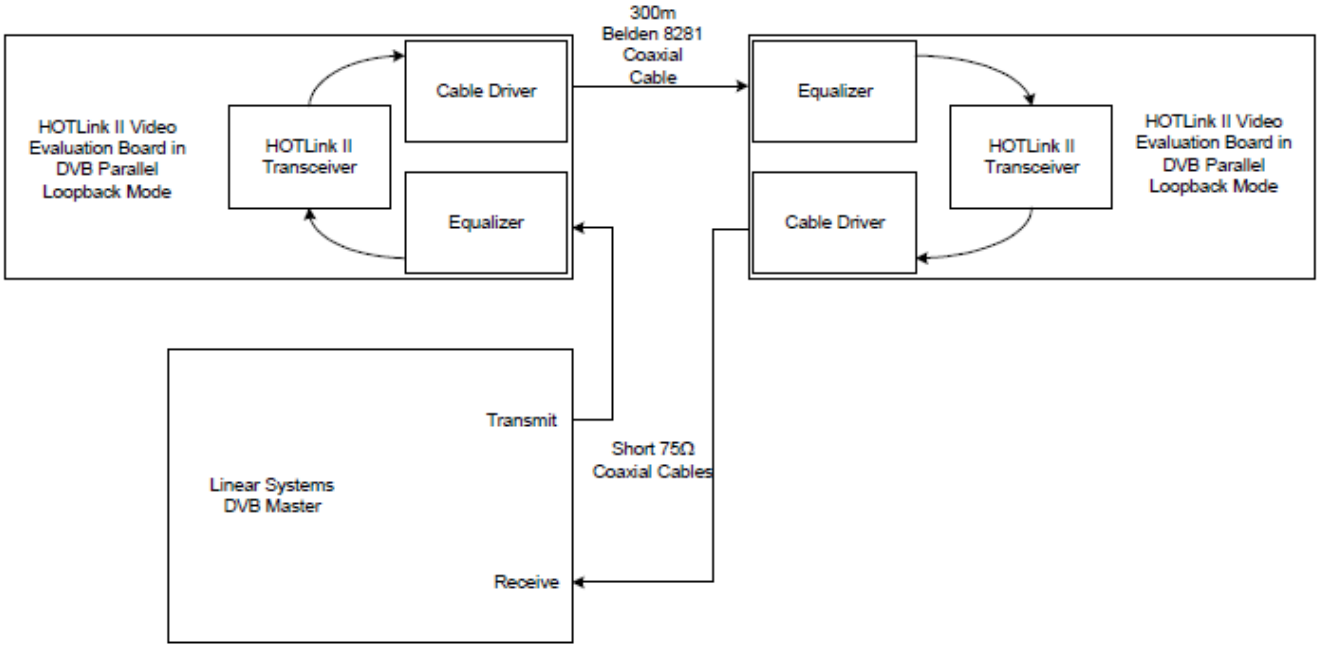

Summary

Cypress Semiconductor's HOTLink II family of video physical layer devices is able to interface with the Gennum GS1524/GS1528 cable driver and adaptive equalizer chipset. This interface was shown to work while driving SMPTE EG 34 pathological signals over 300 m of Belden 8281 coaxial cable. This interface was also tested for a DVB-ASI application using 300m of Belden 8281 cable. Therefore, the HOTLink II device, which can interface to the Gennum cable driver and equalizer, is a proven solution for SMPTE SDI and DVB-ASI serial digital video links over copper.

References

1. CYP(V)15G0101DXB Single-Channel HOTLink II Transceiver datasheet
2. GS1528 HD-LINX™ II Multi-Rate SDI Dual Slew-Rate Cable Driver datasheet, Gennum Corporation, 2002
3. GS1524 HD-LINX™ II Multi-Rate SDI Adaptive Cable Equalizer datasheet, Gennum Corporation, 2003
4. EG 34-1999 Pathological Conditions in Serial Digital Video Systems, SMPTE Engineering Guideline, Society of Motion Picture and Television Engineers, 1999

About the Author

Name: Roy Liu.
Title: Applications Group Lead

Document History

Document Title: Interfacing the HOTLink II™ Transceiver with the 3.3 V Gennum GS1524 Equalizer and GS1528 Cable Driver for Digital Video - AN080

Document Number: 001-14941

Revision	ECN	Orig. of Change	Submission Date	Description of Change
**	1000120	CGX	04/20/2007	Existing Application Note in the web - Added Spec No. and new disclaimer and also updated the copyright date
*A	1770639	FRE	11/26/2007	Updated copyright, added source and revision disclaimers. No technical updates made. Applied new template,
*B	3129908	SAAC	01/06/2011	Removed obsolete parts CYV15G0201DXB, CYV15G0402DXB, and CYV15G0403DXB. Added footnotes 1 and 2 on page 1. Added footnote 3 on page 5. Updated content per latest template.
*C	4267482	YLIU	02/03/2014	Updated in new template. Completing Sunset Review.

Worldwide Sales and Design Support

Cypress maintains a worldwide network of offices, solution centers, manufacturer's representatives, and distributors. To find the office closest to you, visit us at Cypress Locations.

Products

Automotive	cypress.com/go/automotive
Clocks & Buffers	cypress.com/go/clocks
Interface	cypress.com/go/interface
Lighting & Power Control	cypress.com/go/powerpsoc cypress.com/go/plc
Memory	cypress.com/go/memory
PSoC	cypress.com/go/psoc
Touch Sensing	cypress.com/go/touch
USB Controllers	cypress.com/go/usb
Wireless/RF	cypress.com/go/wireless

PSoC® Solutions

psoc.cypress.com/solutions

PSoC 1 | PSoC 3 | PSoC 4 | PSoC 5LP

Cypress Developer Community

Community | Forums | Blogs | Video | Training

Technical Support

cypress.com/go/support

HOTLink II is a trademark of Cypress Semiconductor. All other trademarks or registered trademarks referenced herein are the property of their respective owners.

Cypress Semiconductor
198 Champion Court
San Jose, CA 95134-1709

Phone : 408-943-2600
Fax : 408-943-4730
Website : www.cypress.com

© Cypress Semiconductor Corporation, 2007-2014. The information contained herein is subject to change without notice. Cypress Semiconductor Corporation assumes no responsibility for the use of any circuitry other than circuitry embodied in a Cypress product. Nor does it convey or imply any license under patent or other rights. Cypress products are not warranted nor intended to be used for medical, life support, life saving, critical control or safety applications, unless pursuant to an express written agreement with Cypress. Furthermore, Cypress does not authorize its products for use as critical components in life-support systems where a malfunction or failure may reasonably be expected to result in significant injury to the user. The inclusion of Cypress products in life-support systems application implies that the manufacturer assumes all risk of such use and in doing so indemnifies Cypress against all charges.
This Source Code (software and/or firmware) is owned by Cypress Semiconductor Corporation (Cypress) and is protected by and subject to worldwide patent protection (United States and foreign), United States copyright laws and international treaty provisions. Cypress hereby grants to licensee a personal, non-exclusive, non-transferable license to copy, use, modify, create derivative works of, and compile the Cypress Source Code and derivative works for the sole purpose of creating custom software and or firmware in support of licensee product to be used only in conjunction with a Cypress integrated circuit as specified in the applicable agreement. Any reproduction, modification, translation, compilation, or representation of this Source Code except as specified above is prohibited without the express written permission of Cypress.
Disclaimer: CYPRESS MAKES NO WARRANTY OF ANY KIND, EXPRESS OR IMPLIED, WITH REGARD TO THIS MATERIAL, INCLUDING, BUT NOT LIMITED TO, THE IMPLIED WARRANTIES OF MERCHANTABILITY AND FITNESS FOR A PARTICULAR PURPOSE. Cypress reserves the right to make changes without further notice to the materials described herein. Cypress does not assume any liability arising out of the application or use of any product or circuit described herein. Cypress does not authorize its products for use as critical components in life-support systems where a malfunction or failure may reasonably be expected to result in significant injury to the user. The inclusion of Cypress' product in a life-support systems application implies that the manufacturer assumes all risk of such use and in doing so indemnifies Cypress against all charges.
Use may be limited by and subject to the applicable Cypress software license agreement.