SP4T high linearity, high power RF Switch BGS14PN10

About this document

Scope and purpose

This application note describes Infineon's SP4T high linearity, high power RF Switch: BGS14PN10 as switch for Mobile phones in different RF FE applications such as main, diversity or high linearity Tx band selection switch.

1. This application note documents the behavior of BGS14PN10 for different LTE bands (Band 1, 5, 7 and Band 13).
2. The BGS14PN10 is used in this document.
3. High power RF Switch optimized for mobile phone applications.
4. Key Parameters:

    4 high-linearity TRx paths with power handling capability of up to 40 dBm

    Low insertion loss

    Low harmonic generation

    High port-to-port-isolation

    Suitable for Edge / CDMA2000 / LTE / WCDMA applications

BGS14PN10 is part of the family BGS1xGA14:

- BGS12PN10: SPDT high linearity, high power RF Switch
- BGS13PN10: SP3T high linearity, high power RF Switch
- BGS14PN10: SP4T high linearity, high power RF Switch

Table of Contents

About this document **1**
Table of Contents **2**
List of Figures[1] **3**
List of Tables **4**
1 Introduction **5**
2 BGS14PN10 Features **8**
2.1 Main Features 8
2.2 Functional Diagram 9
2.3 Signal Description 9
3 Application Circuit and Performance Overview **11**
3.1 Summary of Measurement Results 11
3.2 Insertion Loss 12
3.3 Antenna Return Loss 13
3.4 Port Return Loss 14
3.5 Isolation Antenna to Port 15
3.6 Isolation Port to Port 16
4 Switching time **20**
4.1 Measurement Specifications 20
4.2 Measurement Setup 21
4.3 Measurement results 21
5 Intermodulation **23**
5.1 Test conditions 24
5.2 Measurement Setup 25
5.3 Measurement Results 26
6 Harmonic Generation **27**
6.1 Measurement Setup 27
6.2 Measurement results 28
6.2.1 Harmonics for Band 1 28
6.2.2 Harmonics for Band 5 29
6.2.3 Harmonics for Band 7 30
6.2.4 Harmonics for Band 13 31
7 Evaluation Board and Layout Information **32**
7.1 Evaluation Board 32
7.2 Measurement description and deembedding 33
8 Authors **34**
Revision History **35**

List of Figures[1]

Figure 1 Example of Inter-Band CA with single-antenna 5
Figure 2 BGS14PN10 8
Figure 3 Equivalent Circuit Block diagram of BGS14PN10 9
Figure 4 Pin connections (top view) of BGS14PN10 10
Figure 5 Insertion Loss in dB up to 6GHz 12
Figure 6 RF matching @ Ant Port in dB 13
Figure 7 RF matching @ RFx Ports in dB 14
Figure 8 Isolation Antenna to Port in dB 15
Figure 9 Isolation Port to Port with RF1 active in dB 16
Figure 10 Isolation Port to Port with RF2 active in dB 17
Figure 11 Isolation Port to Port with RF3 active in dB 18
Figure 12 Isolation Port to Port with RF4 active in dB 19
Figure 13 Switching Time 20
Figure 14 Rise/Fall Time 20
Figure 15 Measurement setup 21
Figure 16 Screenshots of switching times 22
Figure 17 Representation of IMD products 23
Figure 18 Block diagram of RF Switch intermodulation 24
Figure 19 Block diagram of RF Switch intermodulation 25
Figure 20 Setup for harmonics measurement 27
Figure 21 2nd harmonics at fc=1950MHz, 2fc=3900MHz 28
Figure 22 3rd harmonics at fc=1950MHz, 3fc=5850MHz 28
Figure 23 2nd harmonics at fc=836,5MHz, 2fc=1673MHz 29
Figure 24 3rd harmonics at fc=836,5MHz, 3fc=2509,5MHz 29
Figure 25 2nd harmonics at fc=2535MHz, 2fc=5070MHz 30
Figure 26 3rd harmonics at fc=2535MHz, 3fc=7605MHz 30
Figure 27 2nd harmonics at fc=782MHz, 2fc=1564MHz 31
Figure 28 3rd harmonics at fc=782MHz, 3fc=2346MHz 31
Figure 29 BGS14PN10 Application Board and deembedding kit 32
Figure 30 PCB cross-section of the evaluation board for BGS14PN10 32
Figure 31 SMA connector for deembeding procedure 33

List of Tables

Table 1 Overview LTE Bands 6
Table 2 Pin Configuration of BGS14PN10 9
Table 3 Modes of Operation: Truth Table of BGS14PN10 10
Table 4 Forward Transmission in dB 12
Table 5 Antenna Return Loss in dB 13
Table 6 Port Return Loss in dB 14
Table 7 Isolation Antenna to Port in dB 15
Table 8 Isolation Port to Port with RF1 active in dB 16
Table 9 Isolation Port to Port with RF2 active in dB 17
Table 10 Isolation Port to Port with RF3 active in dB 18
Table 11 Isolation Port to Port with RF4 active in dB 19
Table 12 IMD Mathematical definitions 23
Table 13 IMD Mathematical definitions extended 24
Table 14 IMD products of Band 1 LTE 26
Table 15 IMD products of Band 5 LTE 26
Table 16 IMD products of Band 7 LTE 26
Table 17 IMD products of Band 13 LTE 26
Table 18 Harmonic products of Band 1 LTE 28
Table 19 Harmonic products of Band 5 LTE 29
Table 20 Harmonic products of Band 7 LTE 30
Table 21 Harmonic products of Band 13 LTE 31

1) The graphs are generated with the simulation program AWR Microwave Office®.

1 Introduction

Infineon's RF CMOS switches are the first on the market to be based purely on standard industrial CMOS processes that offer low insertion loss, high isolation and low harmonics generation for high-volume production. They are widely used for band selection/switching or diversity switching at the antenna or different RF paths within the RF Front-End (FE).

The BGS14PN10 RF MOS switch is specifically designed for cell phone and mobile applications. Any of the 4 ports can be used as termination of the diversity antenna handling up to 40 dBm.

This SPDT offers low insertion loss and high robustness against interferer signals at the antenna port and low harmonic generation in termination mode. The on-chip controller integrates CMOS logic and level shifters, driven by control inputs from 1.35 V to VDD. The BGS14PN10 RF Switch is manufactured in Infineon's patented MOS technology, offering the performance of GaAs with the economy and integration of conventional CMOS including the inherent higher ESD robustness. The device has a very small size of only 1.1 x 1.5 mm^2 and a maximum height of 0.375 mm.

The recent trend of smartphone and tablet users to download more and more data anytime and anywhere increases the demand for more bandwidth and for an additional receiver channel called the diversity path. To select the right receive band, a diversity switch with low insertion loss and excellent RF performance is one method of choice. Nowadays, diversity switches covering up to 7 or more different UMTS/LTE bands are becoming more and more popular in smartphones and tablets (Overview LTE Bands).

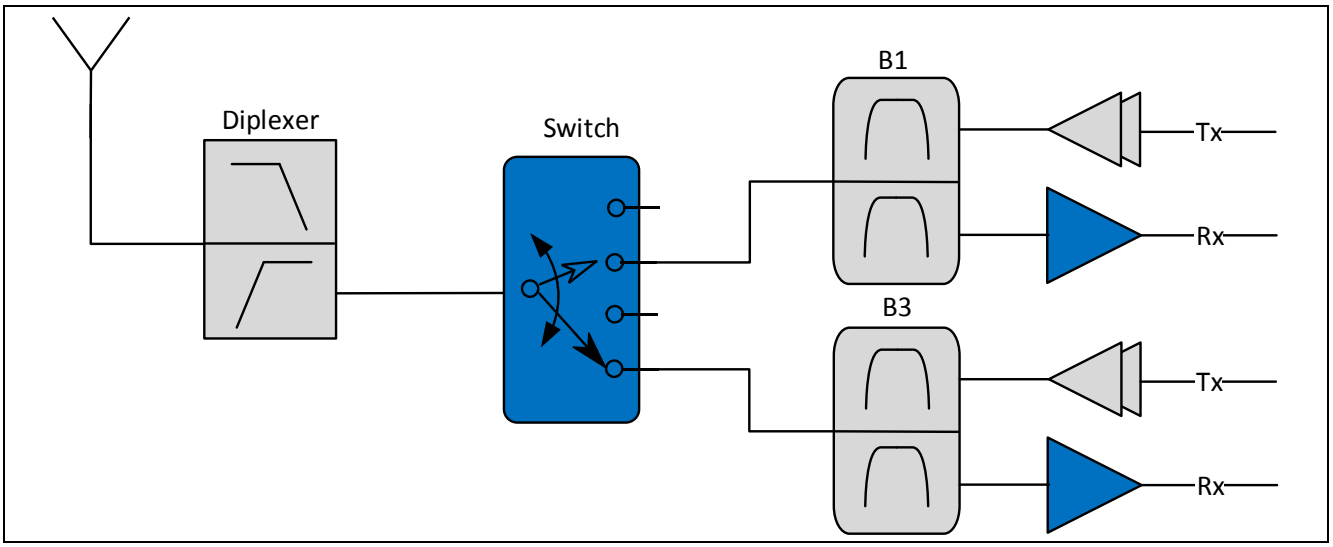

Figure 1 Example of Inter-Band CA with single-antenna

Table 1 Overview LTE Bands

Band No.	Band Definition	Uplink Frequency Range	Downlink Frequency Range	FDD/TDD System	Comment
1	Mid-Band	1920-1980 MHz	2110-2170 MHz	FDD	
2	Mid-Band	1850-1910 MHz	1930-1990 MHz	FDD	
3	Mid-Band	1710-1785 MHz	1805-1880 MHz	FDD	
4	Mid-Band	1710-1755 MHz	2110-2155 MHz	FDD	
5	Low-Band	824-849 MHz	869-894 MHz	FDD	
6	Low-Band	830-840 MHz	875-885 MHz	FDD	
7	High-Band	2500-2570 MHz	2620-2690 MHz	FDD	
8	Low-Band	880-915 MHz	925-960 MHz	FDD	
9	Mid-Band	1749.9-1784.9 MHz	1844.9-1879.9 MHz	FDD	
10	Mid-Band	1710-1770 MHz	2110-2170 MHz	FDD	
11	Mid-Band	1427.9-1452.9 MHz	1475.9-1500.9 MHz	FDD	
12	Low-Band	698-716 MHz	728-746 MHz	FDD	
13	Low-Band	777-787 MHz	746-756 MHz	FDD	
14	Low-Band	788-798 MHz	758-768 MHz	FDD	
15		reserved	reserved	FDD	
16		reserved	Reserved	FDD	
17	Low-Band	704-716 MHz	734-746 MHz	FDD	
18	Low-Band	815-830 MHz	860-875 MHz	FDD	
19	Low-Band	830-845 MHz	875-890 MHz	FDD	
20	Low-Band	832-862 MHz	791-821 MHz	FDD	
21	Mid-Band	1447.9-1462.9 MHz	1495.9-1510.9 MHz	FDD	
22	High-Band	3410-3500 MHz	3510-3600 MHz	FDD	
23	Mid-Band	2000-2020 MHz	2180-2200 MHz	FDD	
24	Mid-Band	1626.5-1660.5 MHz	1525-1559 MHz	FDD	
25	Mid-Band	1850-1915 MHz	1930-1995 MHz	FDD	
26	Low-Band	814-849 MHz	859-894 MHz	FDD	
27	Low-Band	807-824 MHz	852-869 MHz	FDD	
28	Low-Band	703-748 MHz	758-803 MHz	FDD	
29	Low-Band	N/A	716-728 MHz	FDD	
30	High-Band	2305-2315 MHz	2350-2360 MHz	FDD	
31	Low-Band	452.5-457.5 MHz	462.5-467.5MHz	FDD	
32	Mid-Band	N/A	1452-1496 MHz	FDD	
33	Mid-Band	1900-1920 MHz		TDD	
34	Mid-Band	2010-2025 MHz		TDD	
35	Mid-Band	1850-1910 MHz		TDD	
36	Mid-Band	1930-1990 MHz		TDD	
37	Mid-Band	1910-1930 MHz		TDD	

Table 1 Overview LTE Bands

38	High-Band	2570-2620 MHz	TDD	
39	Mid-Band	1880-1920 MHz	TDD	
40	High-Band	2300-2400 MHz	TDD	
41	High-Band	2496-2690 MHz	TDD	
42	High-Band	3400-3600 MHz	TDD	
43	High-Band	3600-3800 MHz	TDD	
44	Low-Band	703-803 MHz	TDD	
46	High-Band	5150-5925 MHz	TDD	

Note: FDD: Frequency Division Duplexing; TDD: Time Division Duplexing

2 BGS14PN10 Features

2.1 Main Features

- High max RF power: 40dBm CW @ 900 MHz, room temperature
- Two ultra-low loss ports (RF1 and RF3):
  - 0.19 dB @ f=0.9 GHz, P_{IN}=38dBm
  - 0.29 dB @ f=1.9 GHz, P_{IN}=38dBm
  - 0.51 dB @ f=2.7 GHz, P_{IN}=33dBm
  - 1.20 dB @ f=3.8 GHz, P_{IN}=33dBm
  - 1.90 dB @ f=5.8 GHz, P_{IN}=33dBm
- Two low loss ports (RF2 and RF4):
  - 0.32 dB @ f=0.9 GHz, P_{IN}=38dBm
  - 0.40 dB @ f=1.9 GHz, P_{IN}=38dBm
  - 0.64 dB @ f=2.7 GHz, P_{IN}=33dBm
  - 1.19 dB @ f=3.8 GHz, P_{IN}=33dBm
  - 1.78 dB @ f=5.8 GHz, P_{IN}=33dBm
- No DC decoupling components required, if no external DC is applied on RF ports
- High ESD robustness
- Low harmonic generation
- High linearity:
  - RF1/RF3 72dBm IIP3
  - RF2/RF4 74dBm IIP3
- No power supply blocking required
- Supply voltage range: 1.8 to 3.6V
- No insertion loss change within supply voltage range
- No linearity change within supply voltage range
- Suitable for EDGE / C2K / LTE / WCDMA / SV-LTE Applications
- Mobile cellular Rx/Tx applications, suitable for LTE/3G
- Applicable for main path and entire RF Front-end without any power restrictions in mobile communication
  - DL/UL CA and MIMO
  - Micro/Pico Cells/Cellular base stations
  - Test equipment
  - Suitable for SV-LTE
- 0.5 to 6.0 GHz coverage
- Small form factor 1.1 mm x 1.5 mm
- 400 µm pad pitch
- RoHS and WEEE compliant package

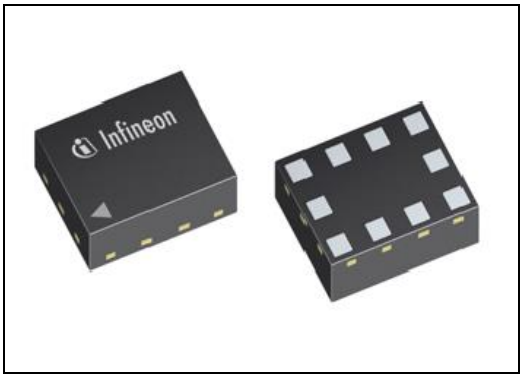

Figure 2 BGS14PN10

2.2 Functional Diagram

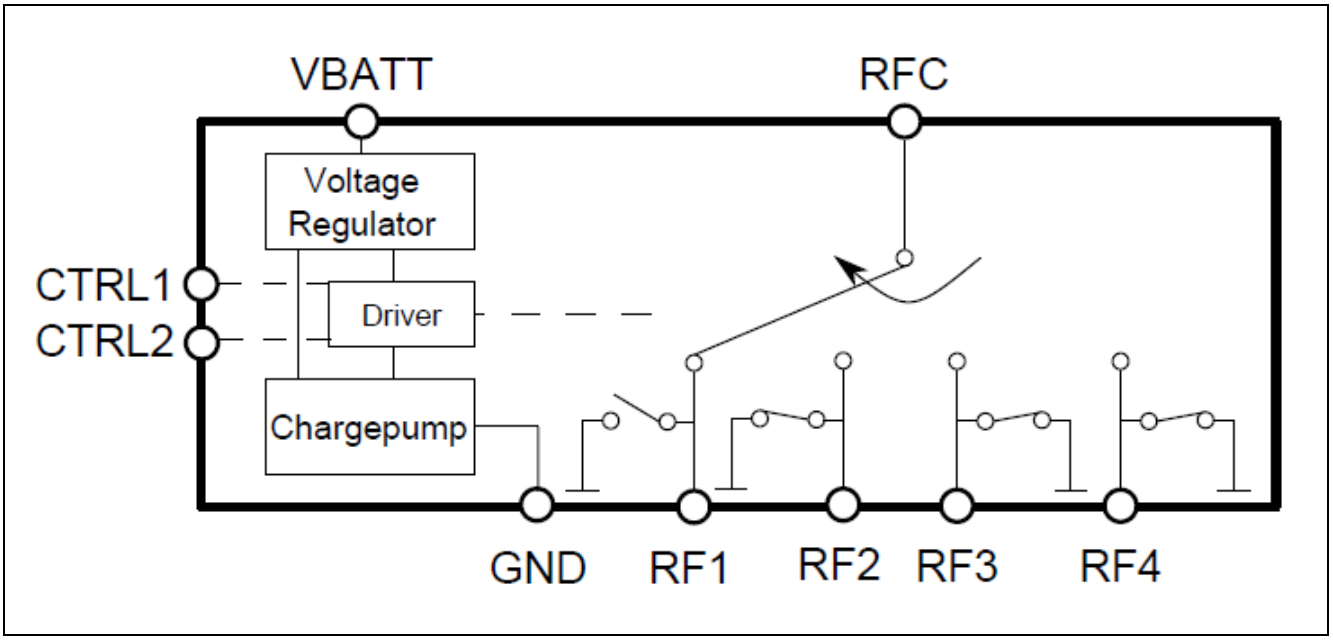

Figure 3 Equivalent Circuit Block diagram of BGS14PN10

2.3 Signal Description

Table 2 Pin Configuration of BGS14PN10

Pin No.	Name	Pin Type	Function
1	RF1	I/O	RF1
2	GND	GND	Ground
3	RF2	I/O	RF2
4	VDD	PWR	Supply Voltage
5	CTRL 1	I	Not Connected
6	CTRL 2	I	Control Pin
7	RF4	I/O	RF4
8	GND	GND	Ground
9	RF3	I/O	RF3
10	ANT	I/O	Common RF / Antenna

Table 3 Modes of Operation: Truth Table of BGS14PN10

CTRL 1	CTRL 2	Mode
0	0	RF1 connected to RFC
0	1	RF2 connected to RFC
1	0	RF3 connected to RFC
1	1	RF4 connected to RFC

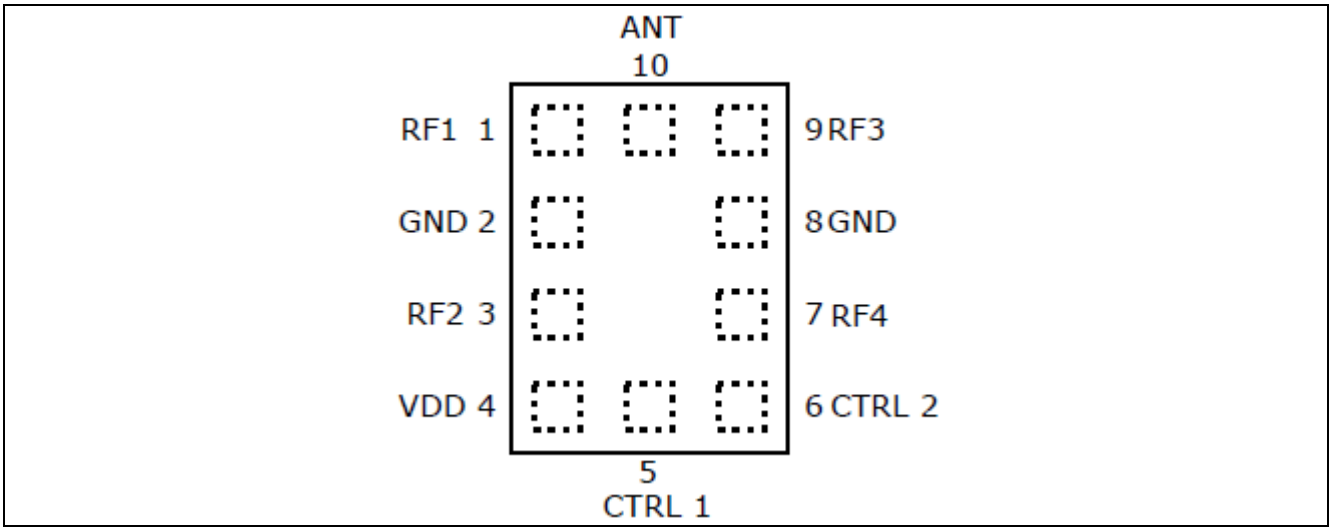

Figure 4 Pin connections (top view) of BGS14PN10

3 Application Circuit and Performance Overview

In this chapter the performance of the application circuit, the schematic and bill-on-materials are presented.

Device:	**BGS14PN10**
Application:	**SP4T high linearity, high power RF Switch**
PCB Marking:	**BGS14PN10**

3.1 Summary of Measurement Results

All measurement results of this application note are measured with a typical device of the BGS14PN10 on an application board. The measurement procedure is shown in chapter 4, 5 and 6, including the needed de-embedding for S-Parameter measurements.

The small signal characteristics are measured at 25 °C, -5 dBm P_{in}, 2.8V V_{dd}, 2.0V V_{crlt} up to 6GHz with a Network Analyzer connected to an automatic multiport switch box in single ended mode.

In the following tables and graphs the most important RF parameter of the BGS14PN10 are shown. The markers are set to the most important frequencies of the WCDMA and LTE system.

3.2 Insertion Loss

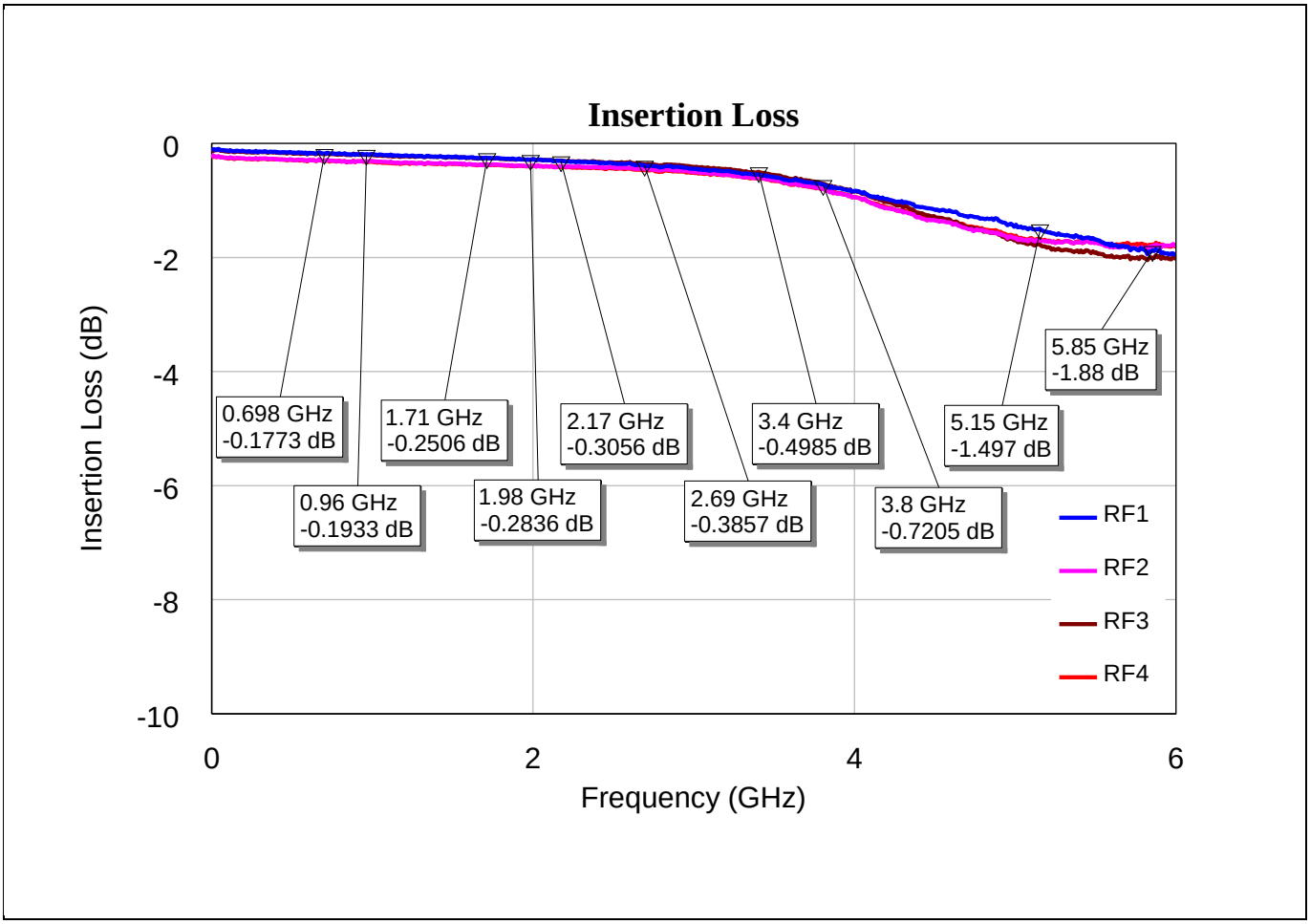

Figure 5 Insertion Loss in dB up to 6GHz

Table 4 Forward Transmission in dB

Frequency (MHz)	698	960	1710	1980	2170	2690	3400	3800	5150	5850
RF1	0.18	0.19	0.25	0.28	0.31	0.39	0.54	0.72	1.50	1.88
RF2	0.30	0.31	0.37	0.40	0.40	0.44	0.61	0.80	1.70	1.80
RF3	0.19	0.20	0.26	0.29	0.30	0.36	0.50	0.70	1.77	1.95
RF4	0.31	0.32	0.37	0.40	0.41	0.47	0.61	0.80	1.67	1.77

3.3 Antenna Return Loss

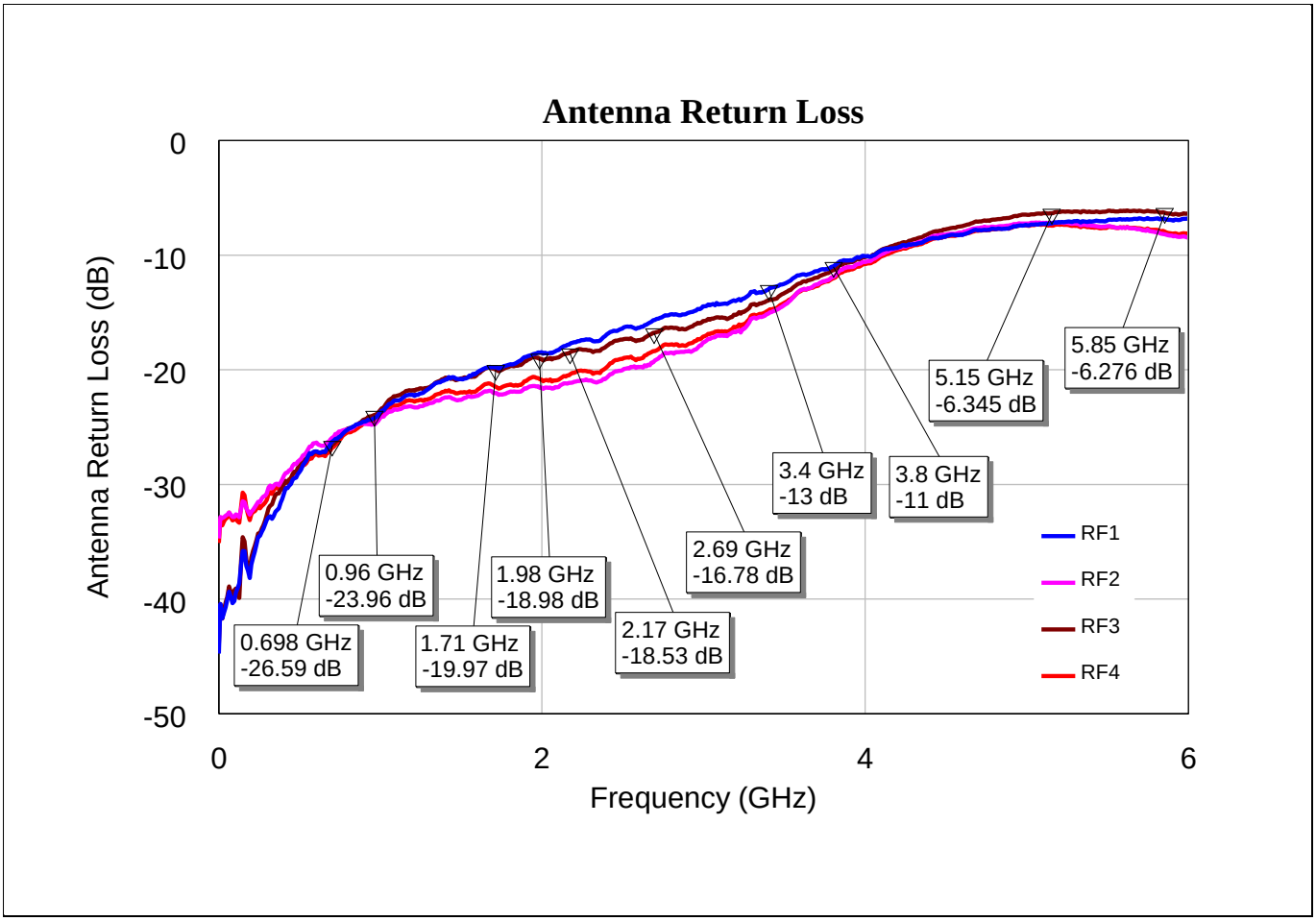

Figure 6 RF matching @ Ant Port in dB

Table 5 Antenna Return Loss in dB

Frequency (MHz)	698	960	1710	1980	2170	2690	3400	3800	5150	5850
RF1	26.34	24.23	19.78	18.50	17.77	15.67	13.00	11.00	7.23	6.82
RF2	25.99	24.75	22.02	21.48	21.13	19.33	15.11	11.91	7.19	8.17
RF3	26.59	23.96	19.97	18.98	18.53	16.78	13.95	11.32	6.35	6.28
RF4	26.88	24.53	21.44	20.75	20.46	18.36	14.84	12.04	7.42	7.92

3.4 Port Return Loss

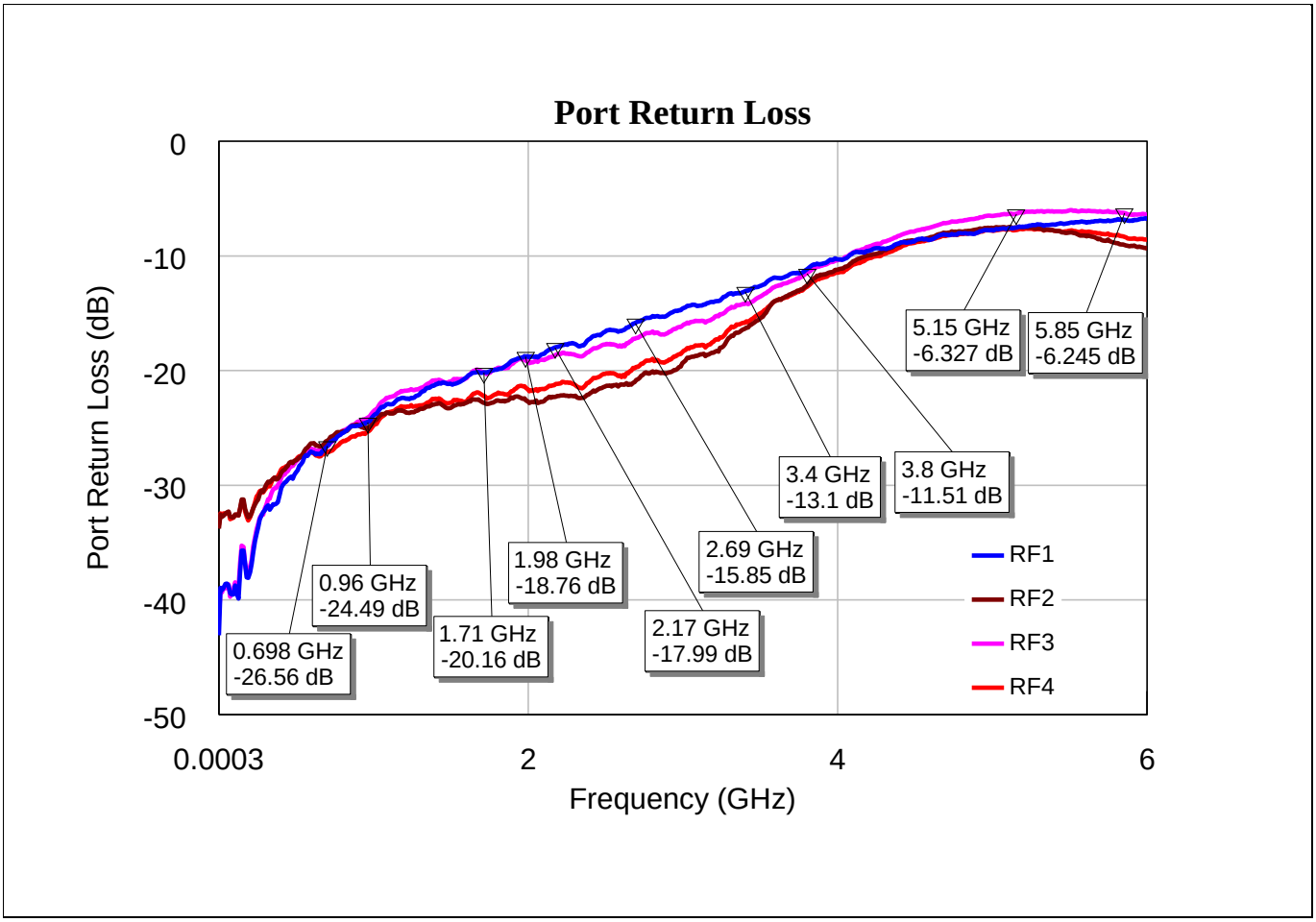

Figure 7 RF matching @ RFx Ports in dB

Table 6 Port Return Loss in dB

Frequency (MHz)	698	960	1710	1980	2170	2690	3400	3800	5150	5850
RF1	26.64	24.49	20.16	18.76	17.99	15.85	13.10	11.18	7.54	6.84
RF2	26.14	24.99	22.79	22.49	22.30	20.98	16.36	12.57	7.52	9.02
RF3	26.56	24.12	20.15	19.06	18.71	17.22	14.19	11.51	6.33	6.24
RF4	27.07	25.34	22.19	21.41	21.25	19.77	15.83	12.71	7.74	8.31

3.5 Isolation Antenna to Port

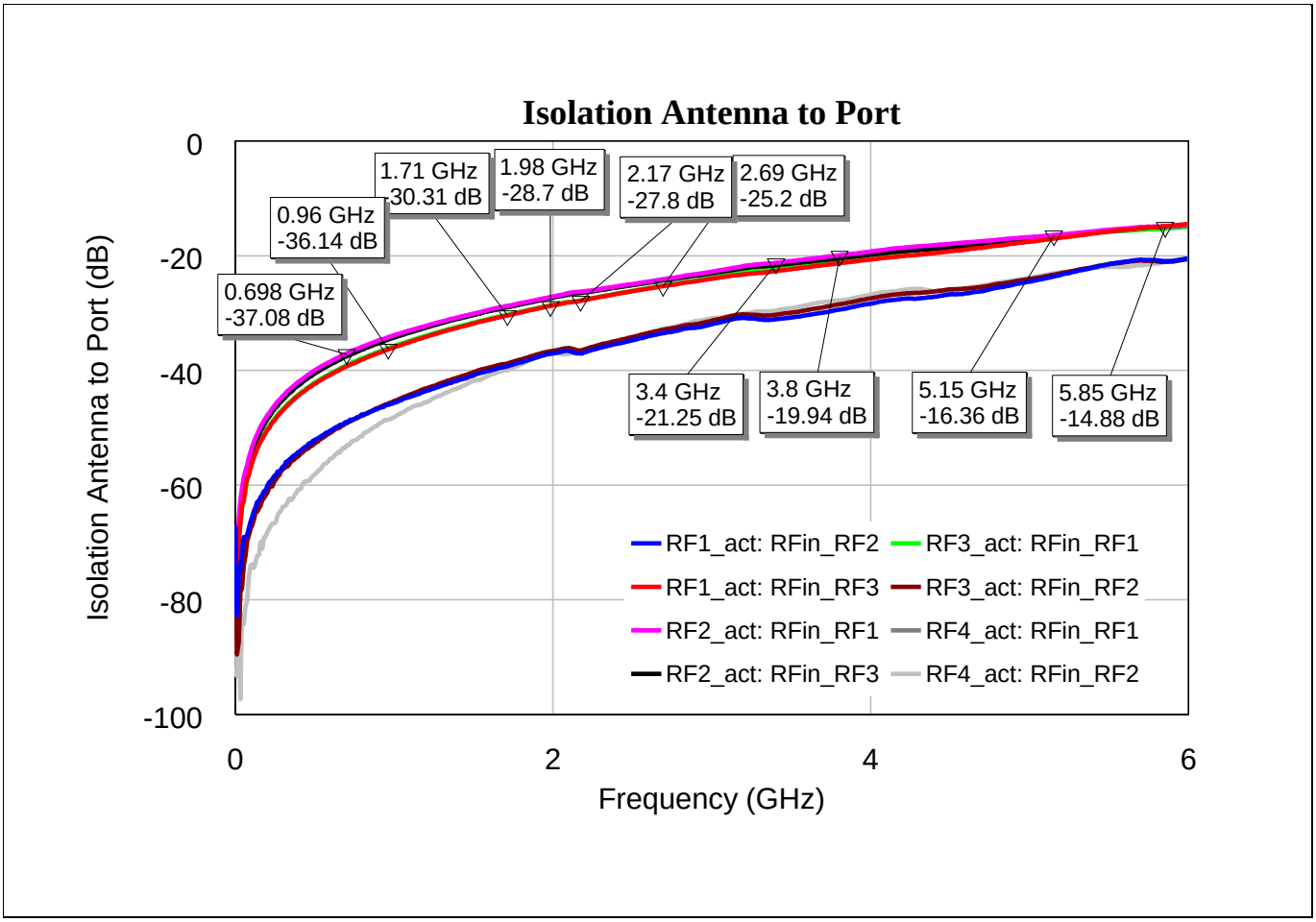

Figure 8 Isolation Antenna to Port in dB

Table 7 Isolation Antenna to Port in dB

Frequency (MHz)	698	960	1710	1980	2170	2690	3400	3800	5150	5850
RF1_act: RFin_RF2	48.99	45.99	39.29	37.11	37.03	33.51	31.09	29.40	23.63	20.91
RF1_act: RFin_RF3	39.31	36.36	30.44	28.77	27.88	25.30	22.67	21.31	17.01	14.87
RF2_act: RFin_RF1	37.08	34.22	28.74	27.23	26.26	24.09	21.25	19.95	16.36	14.88
RF2_act: RFin_RF3	37.57	34.65	28.97	27.41	26.47	24.30	21.67	20.45	16.78	14.91
RF3_act: RFin_RF1	39.10	36.14	30.32	28.70	27.80	25.20	22.29	20.70	16.68	15.27
RF3_act: RFin_RF2	49.26	45.85	38.82	36.69	36.50	32.93	30.31	28.49	23.31	21.05
RF4_act: RFin_RF1	37.46	34.53	28.97	27.31	26.52	24.18	21.43	19.99	16.44	15.16
RF4_act: RFin_RF2	53.23	48.63	39.96	36.73	36.65	32.77	29.55	27.78	23.07	21.13

3.6 Isolation Port to Port

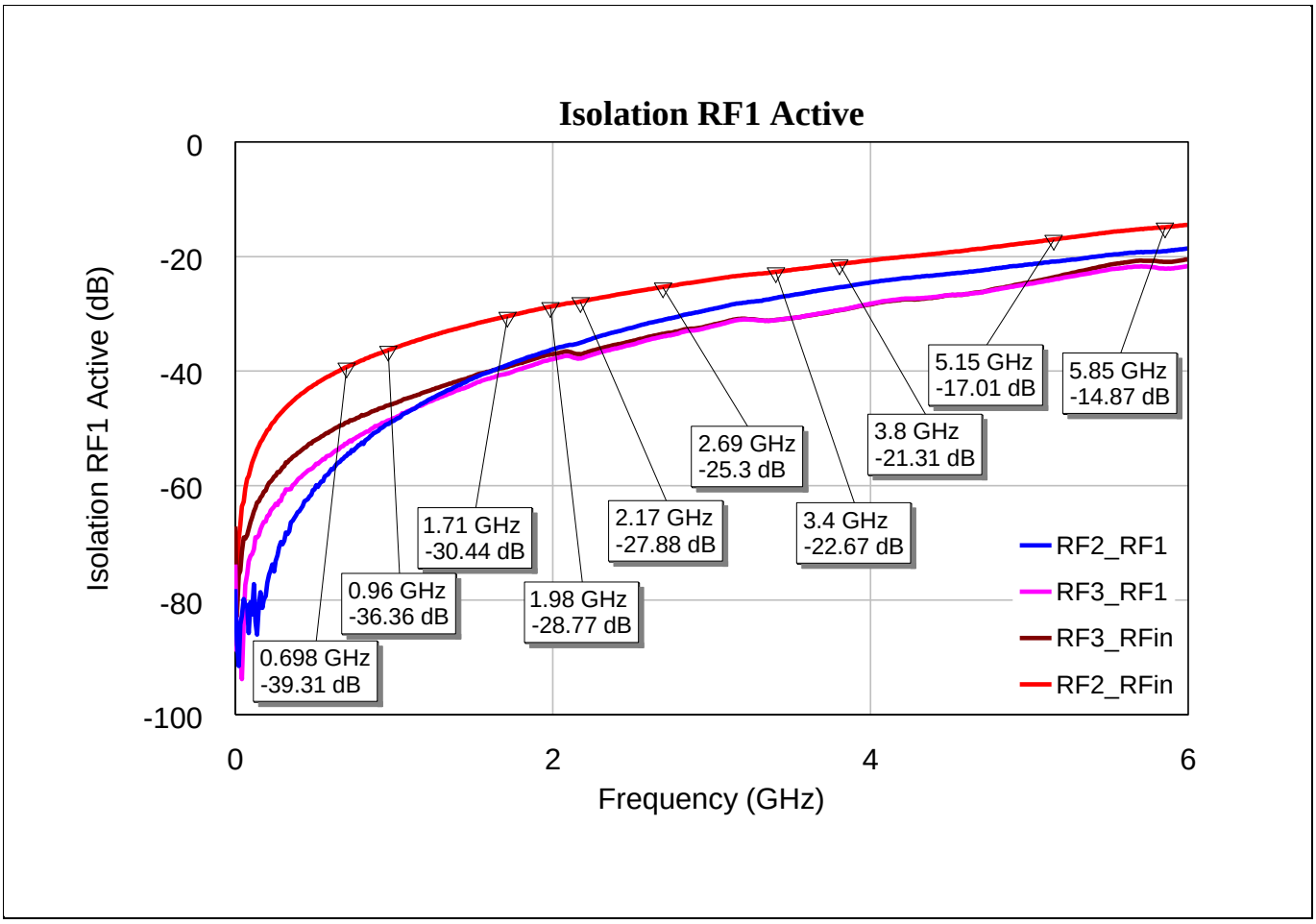

Figure 9 Isolation Port to Port with RF1 active in dB

Table 8 Isolation Port to Port with RF1 active in dB

Frequency (MHz)	698	960	1710	1980	2170	2690	3400	3800	5150	5850
RF2_RF1	54.85	49.27	38.99	36.36	35.08	31.09	27.24	25.39	20.87	19.06
RF3_RF1	52.68	48.64	40.44	38.01	37.77	33.98	31.11	29.34	24.03	22.09
RF3_RFin	48.99	45.99	39.29	37.11	37.03	33.51	31.09	29.40	23.63	20.91
RF2_RFin	39.31	36.36	30.44	28.77	27.88	25.30	22.67	21.31	17.01	14.87

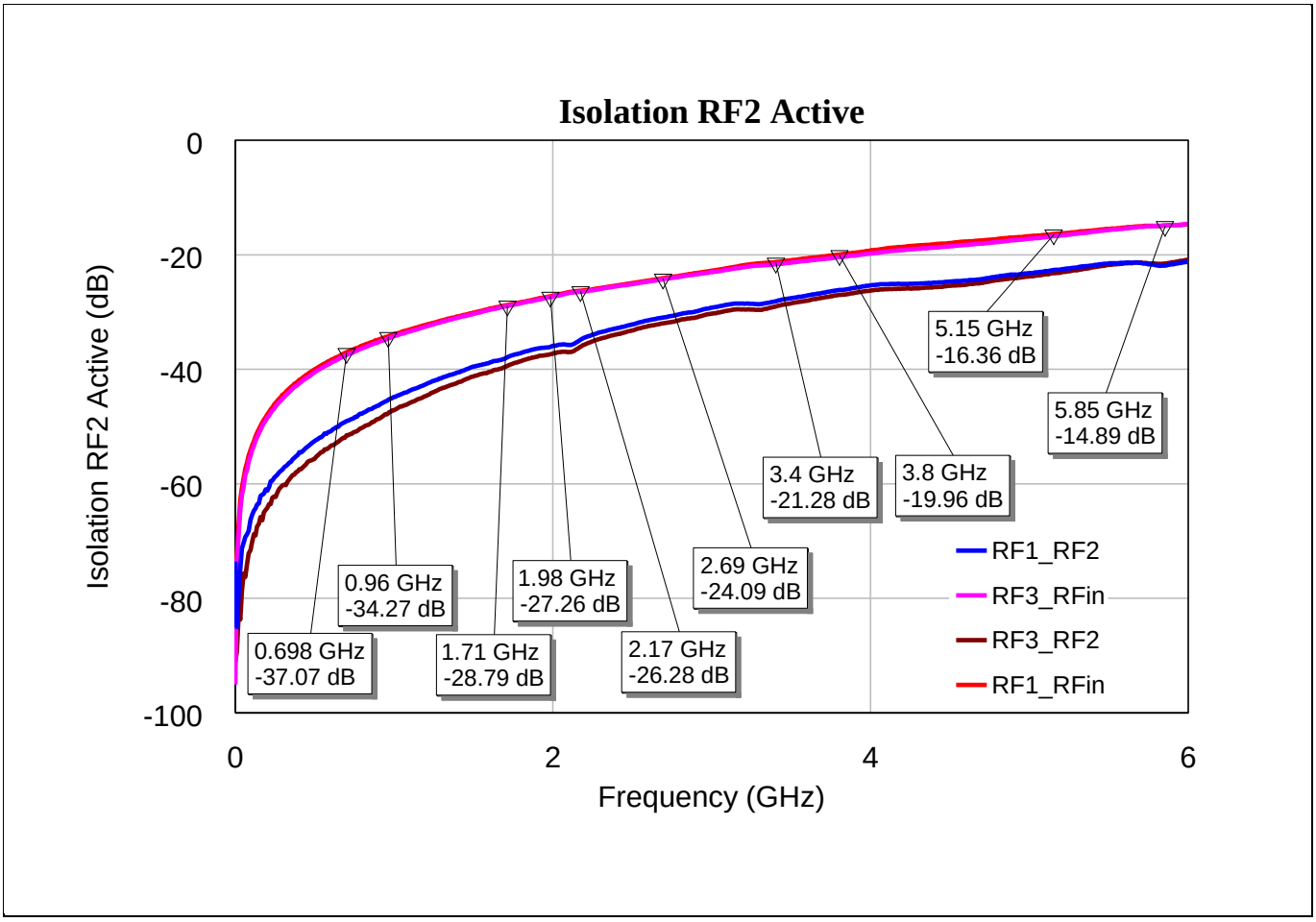

Figure 10 Isolation Port to Port with RF2 active in dB

Table 9 Isolation Port to Port with RF2 active in dB

Frequency (MHz)	698	960	1710	1980	2170	2690	3400	3800	5150	5850
RF1_RF2	49.10	45.40	37.93	36.10	34.91	30.96	28.13	26.17	22.67	21.88
RF3_RFin	37.56	34.64	28.97	27.40	26.46	24.27	21.65	20.42	16.74	14.90
RF3_RF2	51.65	47.74	39.44	37.39	36.11	31.97	29.05	27.03	23.21	21.54
RF1_RFin	37.07	34.27	28.79	27.26	26.28	24.09	21.28	19.96	16.36	14.89

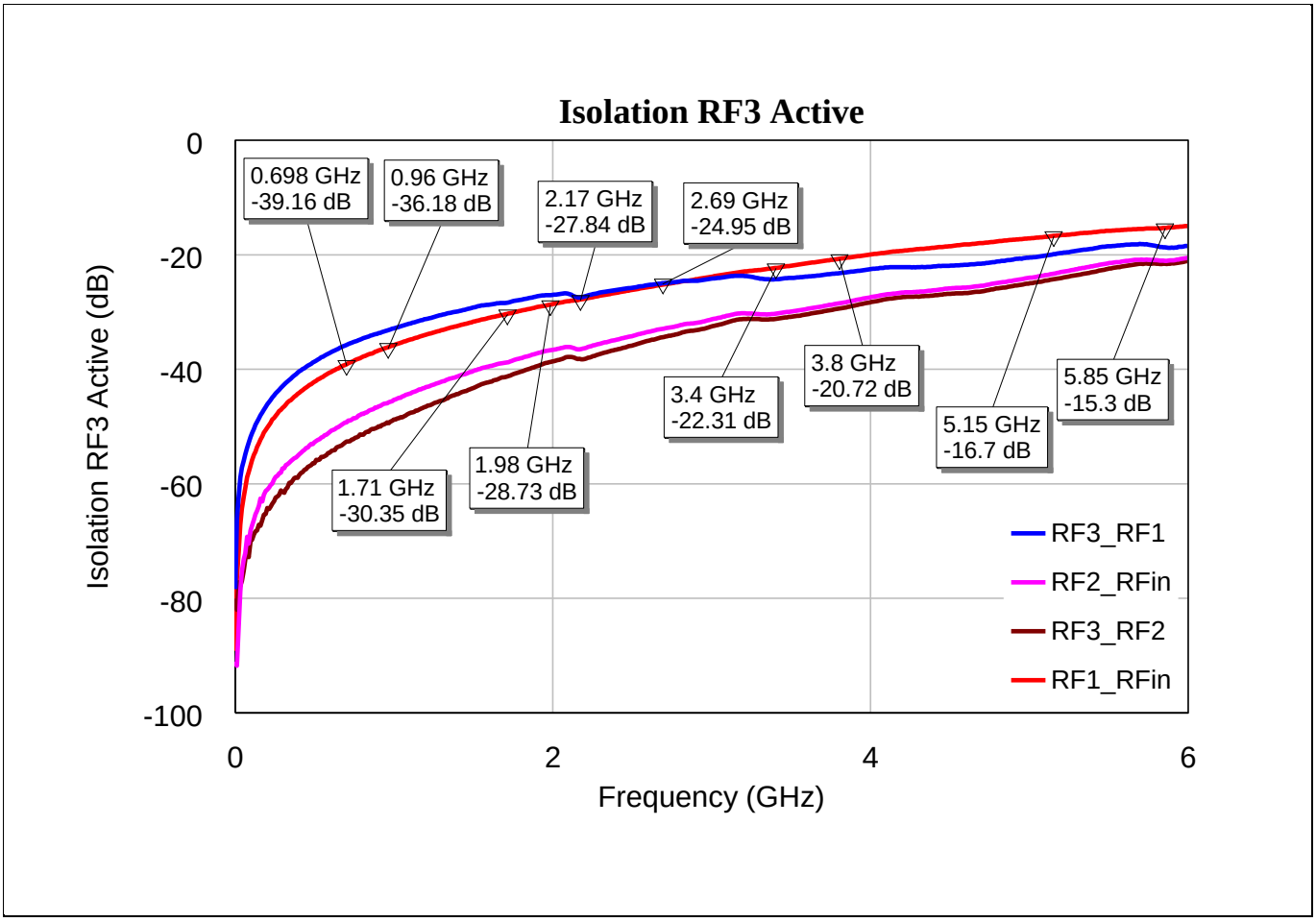

Figure 11 Isolation Port to Port with RF3 active in dB

Table 10 Isolation Port to Port with RF3 active in dB

Frequency (MHz)	698	960	1710	1980	2170	2690	3400	3800	5150	5850
RF3_RF1	35.77	33.20	28.36	27.04	27.43	24.95	24.28	23.21	19.91	18.68
RF2_RFin	49.29	45.87	38.79	36.69	36.50	32.93	30.28	28.48	23.30	21.03
RF3_RF2	52.68	49.32	41.29	38.74	38.19	34.42	31.21	29.40	24.28	21.58
RF1_RFin	39.16	36.18	30.35	28.73	27.84	25.20	22.31	20.72	16.70	15.30

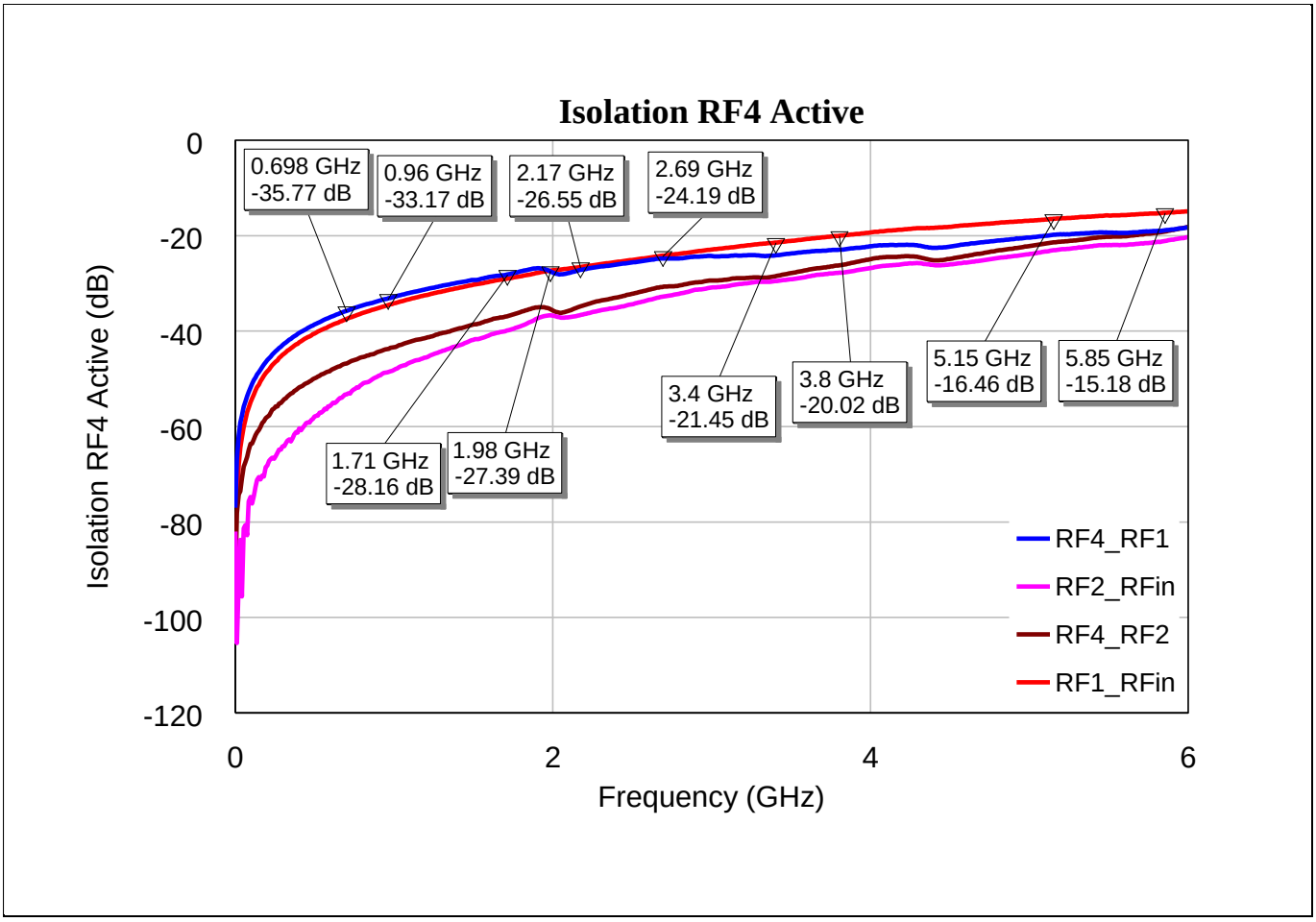

Figure 12 Isolation Port to Port with RF4 active in dB

Table 11 Isolation Port to Port with RF4 active in dB

Frequency (MHz)	698	960	1710	1980	2170	2690	3400	3800	5150	5850
RF4_RF1	35.77	33.17	28.16	27.39	27.20	24.77	24.11	22.94	19.82	18.87
RF2_RFin	53.29	48.59	39.90	36.68	36.64	32.77	29.52	27.77	23.06	21.13
RF4_RF2	46.79	43.73	36.89	35.32	34.84	30.72	28.50	26.21	21.40	19.13
RF1_RFin	37.49	34.55	29.02	27.34	26.55	24.19	21.45	20.02	16.46	15.19

4 Switching time

4.1 Measurement Specifications

Switching On Time: 50% Trigger signal to 90 % RF Signal

Switching Off Time: 50% Trigger signal to 10% RF Signal

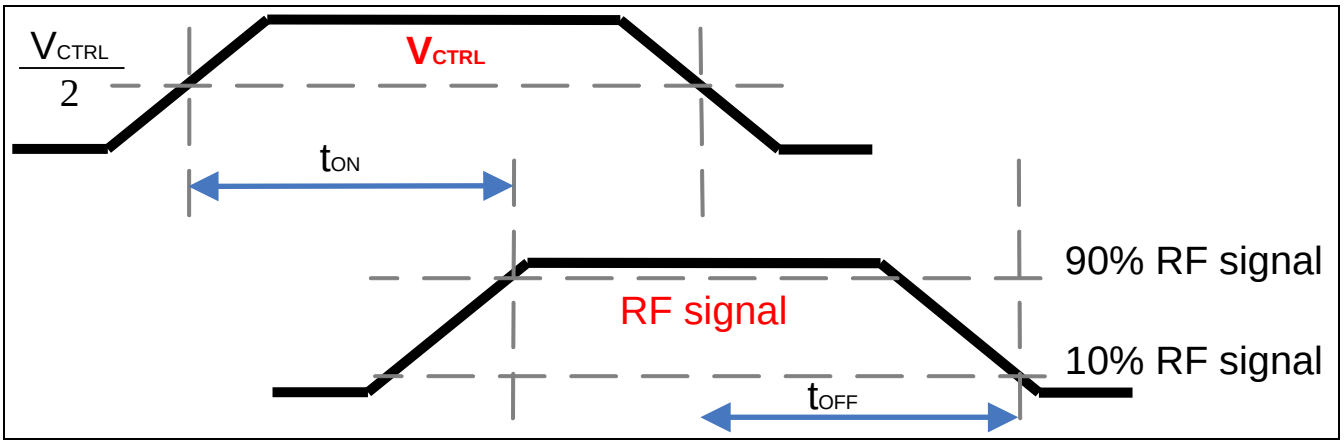

Figure 13 Switching Time

Rise time: 10% to 90% RF Signal

Fall time: 90% to 10% RF Signal

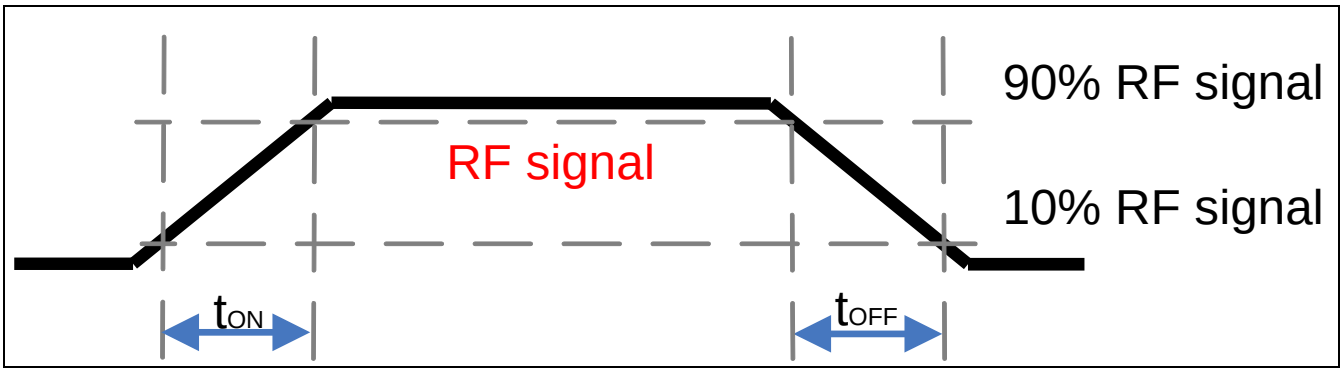

Figure 14 Rise/Fall Time

4.2 Measurement Setup

The setup on below is representing switching time measurement setup. In the Figure 15 the setup is configured for a SPDT switch, where the trigger signal is a one kHz signal with the amplitude of device-Vdd/Vctrl. The setup properties (RFin and trigger signal pulse) could be changed for measuring other devices like amplifier.

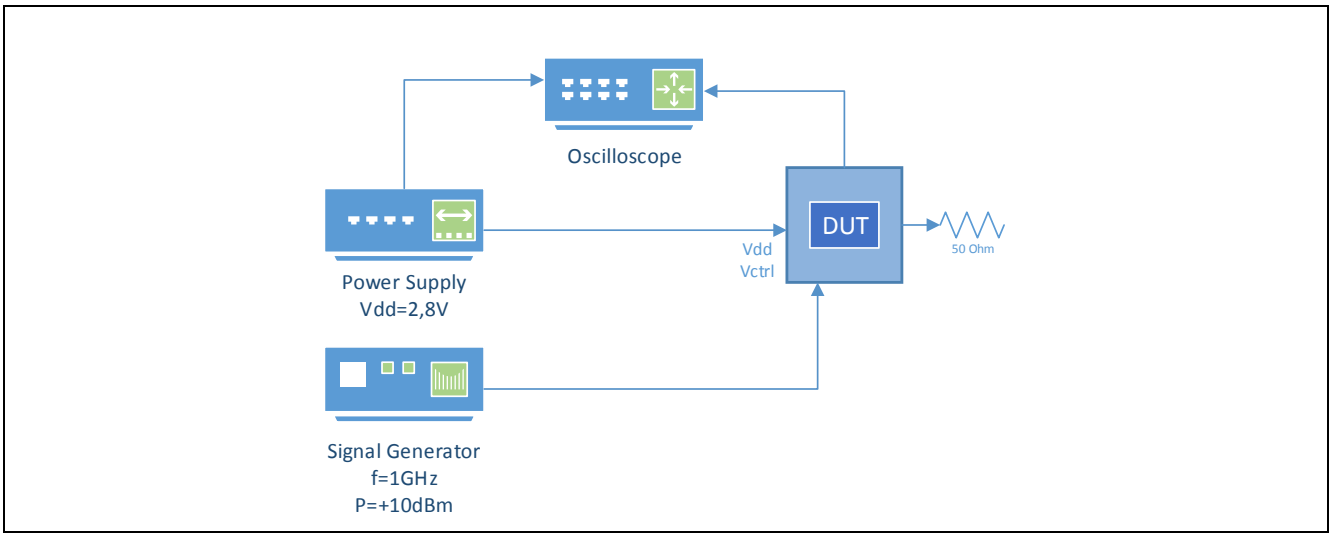

Figure 15 Measurement setup

4.3 Measurement results

The switching Time measurement setup consist of one pulse generator which generates a sqare wave with 50% duty cycle and an amplitude of 1.8 Volts, an oscilloscope which can detect the 1 GHz signal and the 1 kHz signal and one Signal generator which is set to an output signal of 1GHz with a power level 10 dBm.

If the oscilloscope can not detect the 1 GHz signal of the RF path, due to small bandwith, it is possible tu use a cristal oscillator in front of the oscilloscope (such a device detects any RF signal present at input and commutate that one) that the RF signal can be detected.

VDD= 2.7V
Vctrl= 0/1.8V Pulsed with 600Hz 50%duty cicle
RFIn= 300MHz @ 0dBm

	Vctrl to RF	RF rise Time
Spec	2 - 4 µs	2 µs
RF1	4.080 µs	535 ns
RF2	4.080 µs	510 ns
RF3		
RF4		

Switching time

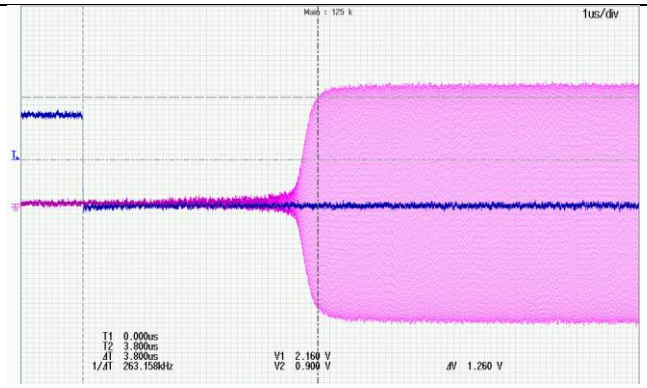

RF1

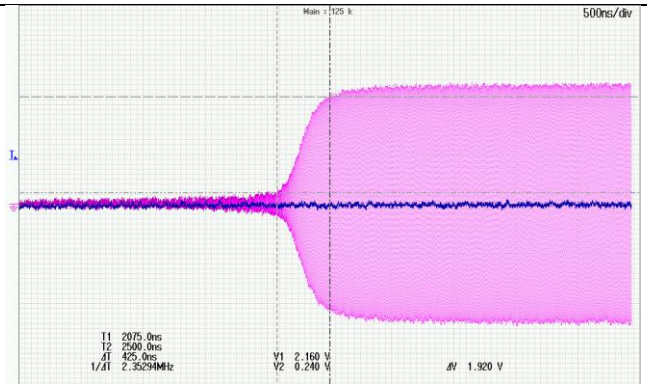

RF1

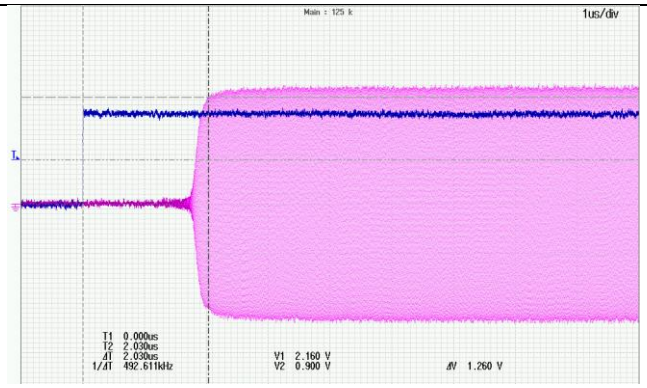

RF2

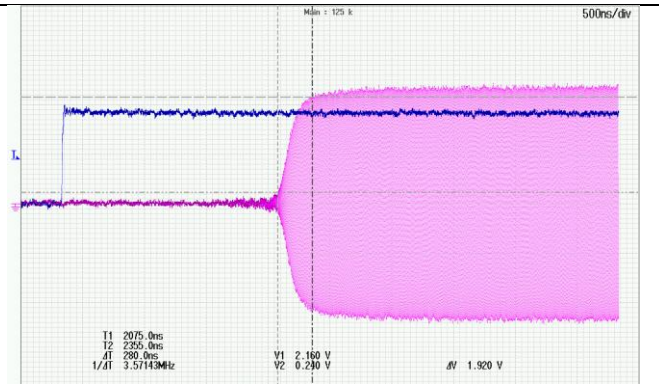

RF2

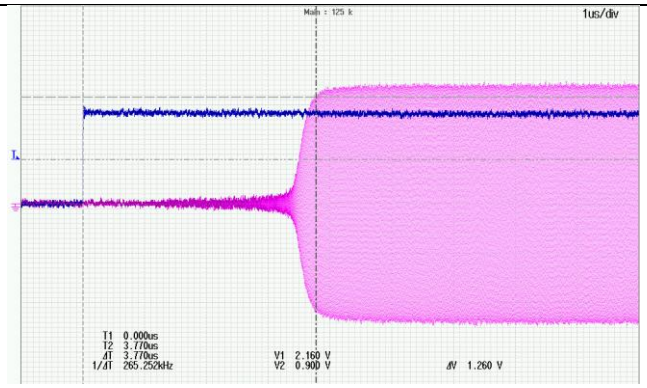

RF3

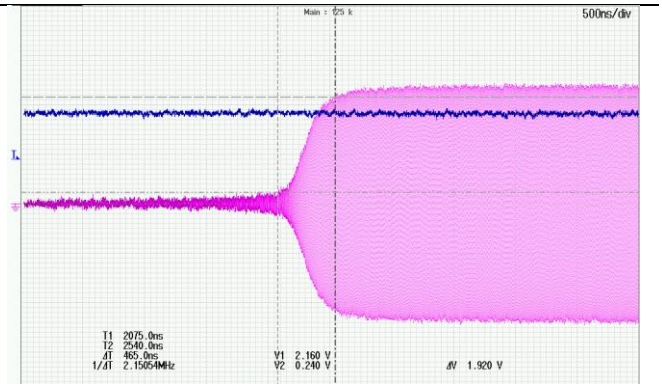

RF3

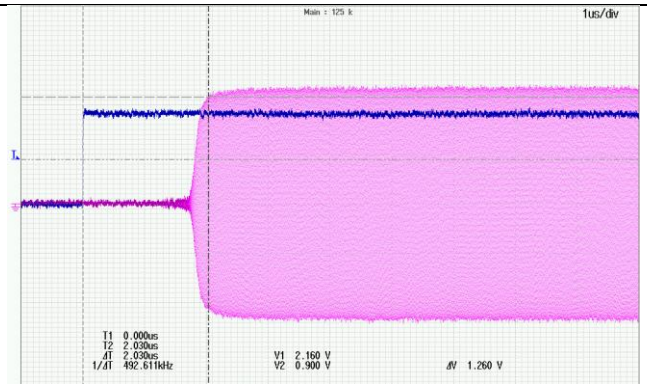

RF4

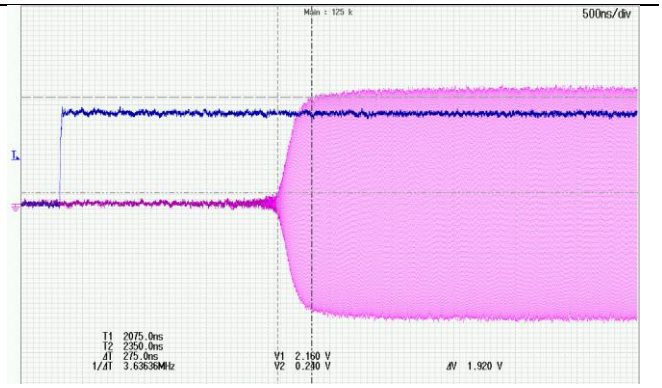

RF4

Switching On Time: 50% Trigger signal to 90 % RF Signal

Rise time: 10% to 90% RF Signal

Figure 16 Screenshots of switching times

5 Intermodulation

Intermodulation distortion is characterized by the appearance in the output of frequencies equal to the sums and differences of integral multiples of the two or more component frequencies present in the input waveform. Defined by the following expressions:

Table 12 IMD Mathematical definitions

Second Order IMD	$f_{IMD2low} = f_{Rx} - f_{Tx}$		$f_{IMD2high} = f_{Rx} + f_{Tx}$
Third Order IMD	$f_{IMD3l} = 2f_{Tx} - f_{Rx}$	$f_{IMD3m} = 2f_{Rx} + f_{Tx}$	$f_{IMD3h} = f_{Rx} + 2f_{Tx}$

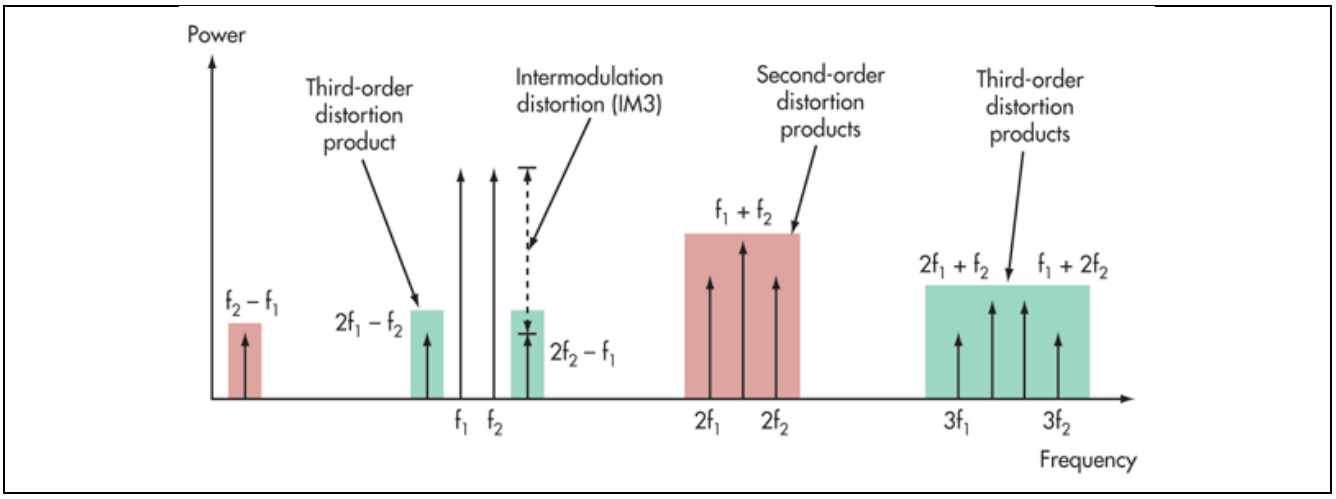

Figure 17 Representation of IMD products

5.1 Test conditions

Developing the same mathematical expressions we can see that external signals matching IMDs frequencies can interfere over f_{Rx}

Table 13 IMD Mathematical definitions extended

Second Order IMD	$f_{IMD2low} = f_{Rx} - f_{Tx} \rightarrow f_{Rx} = f_{IMD2low} + f_{Tx}$		$f_{IMD2high} = f_{Rx} + f_{Tx} \rightarrow f_{Rx} = f_{IMD2high} - f_{Tx}$
Third Order IMD	$f_{IMD3l} = 2f_{Tx} - f_{Rx} \rightarrow f_{Rx} = 2f_{Tx} - f_{IMD3l}$	$f_{IMD3m} = 2f_{Rx} + f_{Tx} \rightarrow f_{Rx} = (f_{Tx} - f_{IMD3m})/2$	$f_{IMD3h} = f_{Rx} + 2f_{Tx} \rightarrow f_{Rx} = f_{IMD3h} - 2f_{Tx}$

One of the possible intermodulation scenarios is shown in Figure 18. The transmission (Tx) signal from the main antenna is coupled into the diversity antenna with high power. This signal (21 dBm or 10 dBm depending the case) and a received Jammer signal (-15 dBm) are entering the switch. Thanks to the specified application for the BGS14PN10 in between the filters and the Transceiver, the Tx signal from the main antenna loose until arriving at the switch input mostly 5 to 10 or more dB, depending of the filter and PCB structure of the RF frontend. The IMD products are measured with a Tx of 21dBm or 10dBm, which is corresponding to the IMD spec of a main antenna diversity switch like Infineon BGS14PN10. Therefore, the measured IMD products will be extremely better in the specified application circuit within the filters and transceiver as showed in the measurement results below.

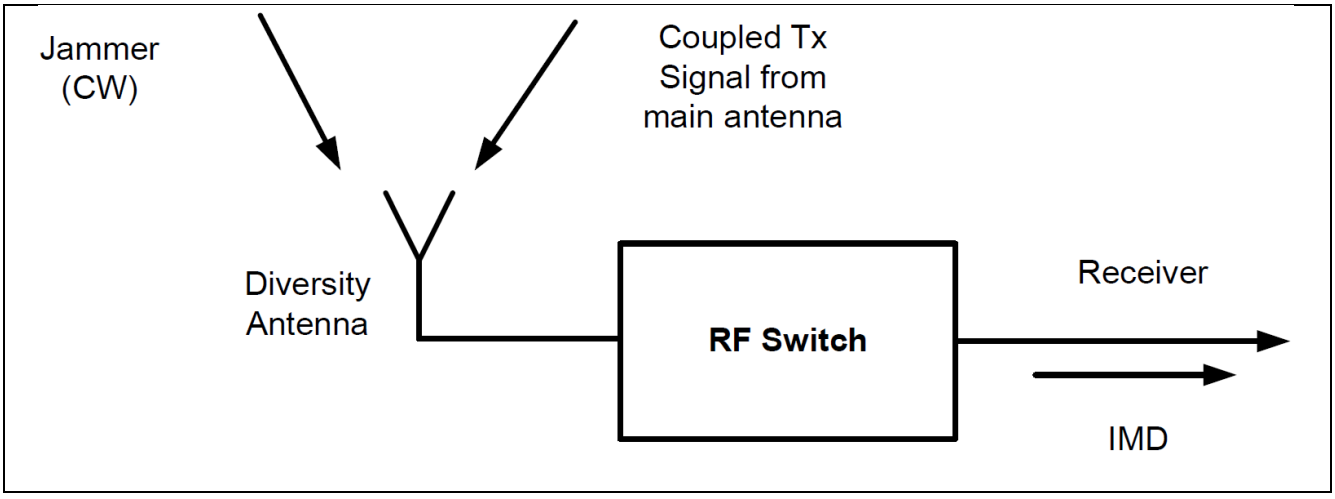

Figure 18 Block diagram of RF Switch intermodulation

Special combinations of TX and Jammer signal are producing intermodulation products 2nd and 3rd order, which fall in the RX band and disturb the wanted RX signal.

5.2 Measurement Setup

The test setup for the IMD measurements has to provide a very high isolation between RX and TX signals. As an example the test set-up and the results for the high band are shown (Figure 19 and Table 11).
For the RX / TX separation a professional duplexer with 80 dB isolation is used.

For each distortion scenario there is a min and a max value given. This variation is caused by a phase shifter connected between switch and duplexer. In the test set-up the phase shifter represents a no ideal matching of the switch to 50 Ohm.

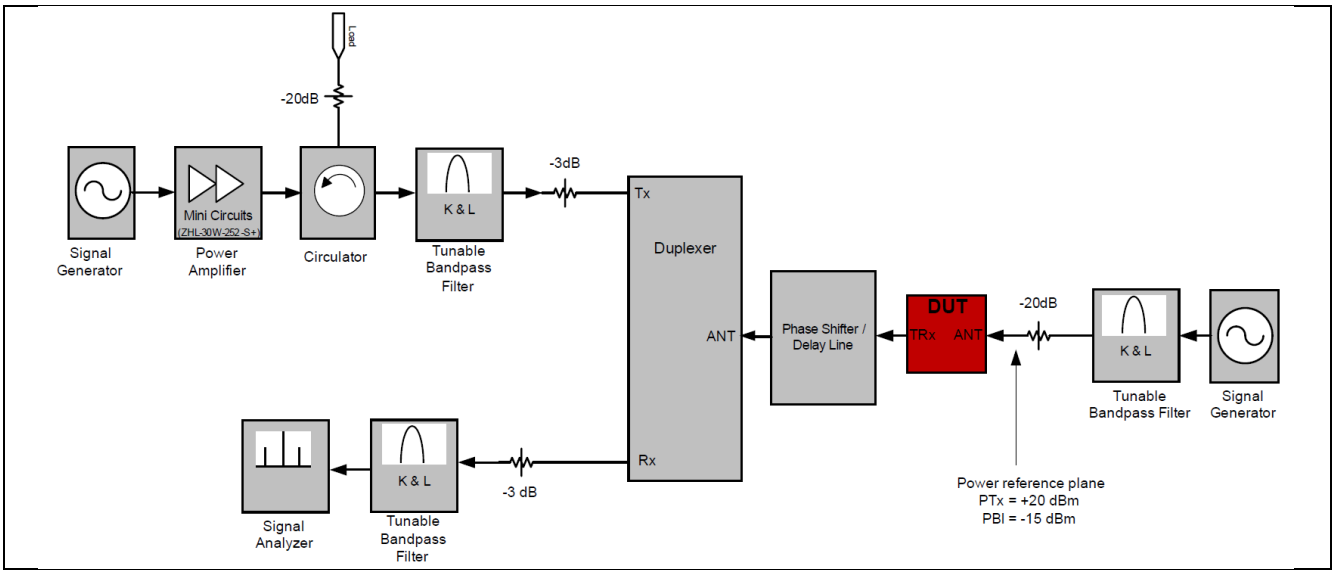

Figure 19 Block diagram of RF Switch intermodulation

5.3 Measurement Results

Table 14 IMD products of Band 1 LTE

IMD Band 1 P_{Tx}=21dBm	RF1	RF2	RF3	RF4
IMD2Low ($f_{blocker}$=190MHz)	-111.02	-111.94	-110.06	-110.99
IMD2High ($f_{blocker}$=4090MHz)	-126.31	-131.77	-125.99	-130.25
IMD3 ($f_{blocker}$=1760MHz)	-125.48	-121.05	-124.27	-121.10

Table 15 IMD products of Band 5 LTE

IMD Band 5 P_{Tx}=21dBm	RF1	RF2	RF3	RF4
IMD2Low (fblocker=45MHz)	-113.60	-111.29	-113.79	-110.39
IMD2High (fblocker=1718MHz)	-127.99	-130.21	-127.71	-130.02
IMD3 (fblocker=791,5MHz)	-129.10	-122.26	-130.09	-120.95

Table 16 IMD products of Band 7 LTE

IMD Band 7 P_{Tx}=21dBm	RF1	RF2	RF3	RF4
IMD2Low ($f_{blocker}$=120MHz)	-112.59	-111.04	-112.35	-113.23
IMD2High ($f_{blocker}$=5190MHz)	-125.72	-130.66	-125.22	-130.25
IMD3 ($f_{blocker}$=2415MHz)	-127.73	-128.98	-127.48	-127.97

Table 17 IMD products of Band 13 LTE

IMD Band 13 P_{Tx}=21dBm	RF1	RF2	RF3	RF4
IMD2Low ($f_{blocker}$=31MHz)	-114.41	-110.11	-114.16	-111.87
IMD2High ($f_{blocker}$=1533MHz)	-123.41	-130.31	-123.49	-130.15
IMD3 ($f_{blocker}$=813MHz)	-122.66	-120.15	-124.23	-123.45

6 Harmonic Generation

Harmonic generation is another important parameter for the characterization of a RF switch. RF switches have in such a Differential Band select Switching application to deal with high RF levels, up to 24 dBm. With this high RF power at the input of the switch harmonics are generated. This harmonics (2nd and 3rd) can disturb the other reception bands or cause distortion in other RF applications (GPS, WLan) within the mobile phone.

6.1 Measurement Setup

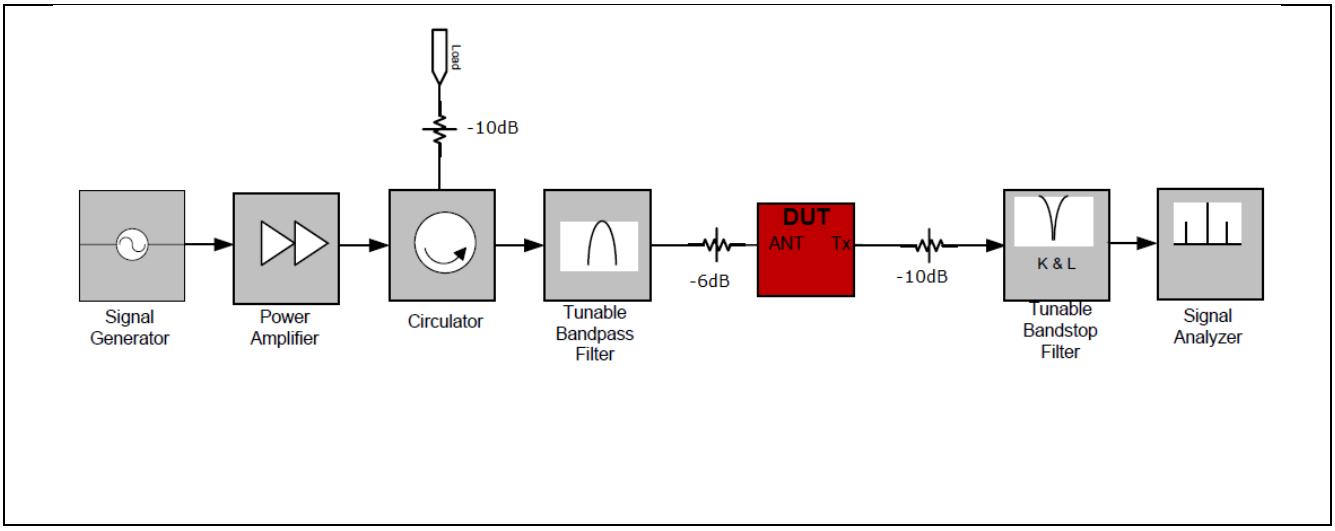

Figure 20 Setup for harmonics measurement

The results for the 2nd and 3rd order harmonic generation at different Bands are shown from for all RF ports on the following points.
The x-axis show the input power and the y-axis show the generated harmonics in dBm.

6.2 Measurement results

6.2.1 Harmonics for Band 1

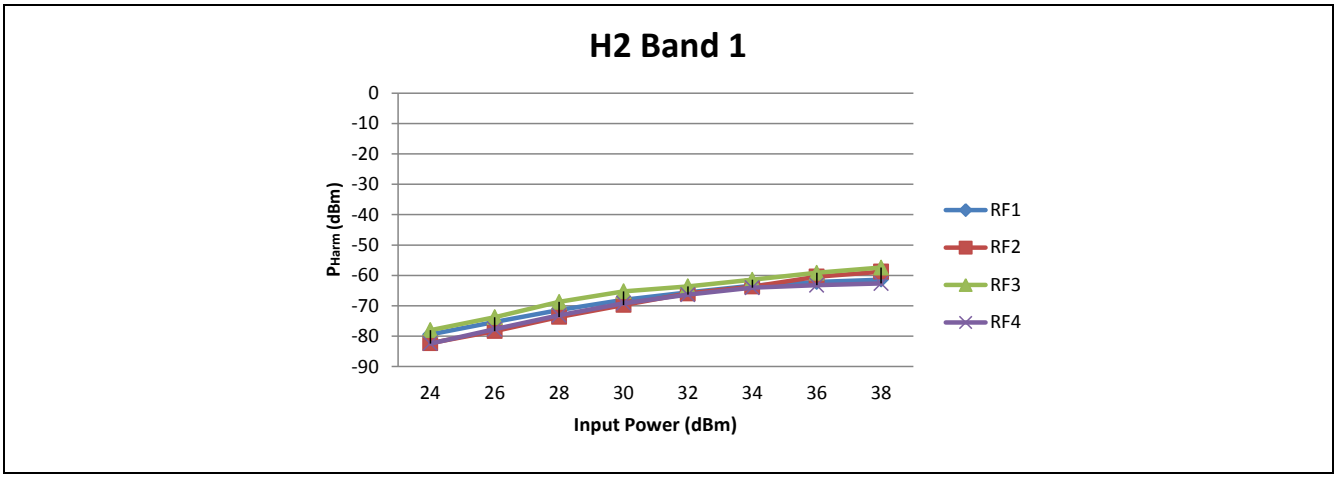

Figure 21 2nd harmonics at fc=1950MHz, 2fc=3900MHz

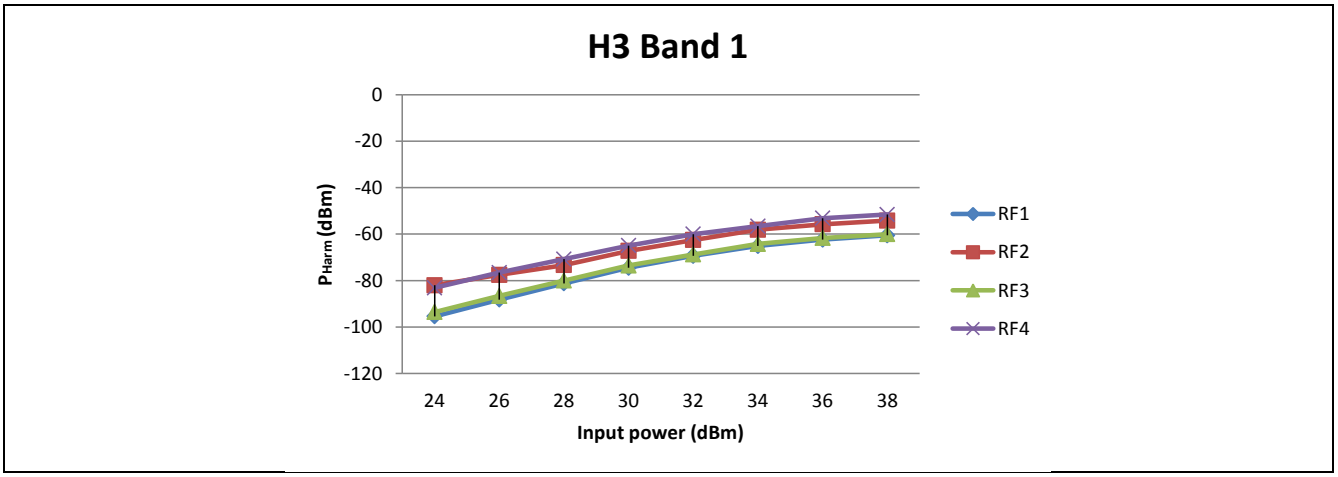

Figure 22 3rd harmonics at fc=1950MHz, 3fc=5850MHz

Table 18 Harmonic products of Band 1 LTE

		Band 1							
		H2 (dBm)	H2 (dBm)	H2 (dBm)	H2 (dBm)	H3 (dBm)	H3 (dBm)	H3 (dBm)	H3 (dBm)
		RF1	RF2	RF3	RF4	RF1	RF2	RF3	RF4
RFin (dBm)	24	-79.46	-82.29	-78.02	-82.42	-95.38	-82.03	-93.52	-83.13
	26	-75.35	-78.32	-73.75	-77.72	-88.21	-77.54	-86.63	-76.54
	28	-71.42	-73.69	-68.72	-73.14	-81.19	-73.36	-80.02	-70.79
	30	-68.04	-69.75	-65.25	-69.15	-74.52	-67.22	-73.49	-64.93
	32	-65.56	-65.94	-63.62	-66.35	-69.38	-62.54	-68.76	-60.03
	34	-63.38	-63.69	-61.44	-64.07	-65.11	-58.15	-64.26	-56.61
	36	-62.19	-60.43	-59.15	-63.24	-62.38	-55.78	-61.67	-53.14
	38	-61.38	-58.77	-57.42	-62.66	-60.52	-54.22	-60.02	-51.59

6.2.2 Harmonics for Band 5

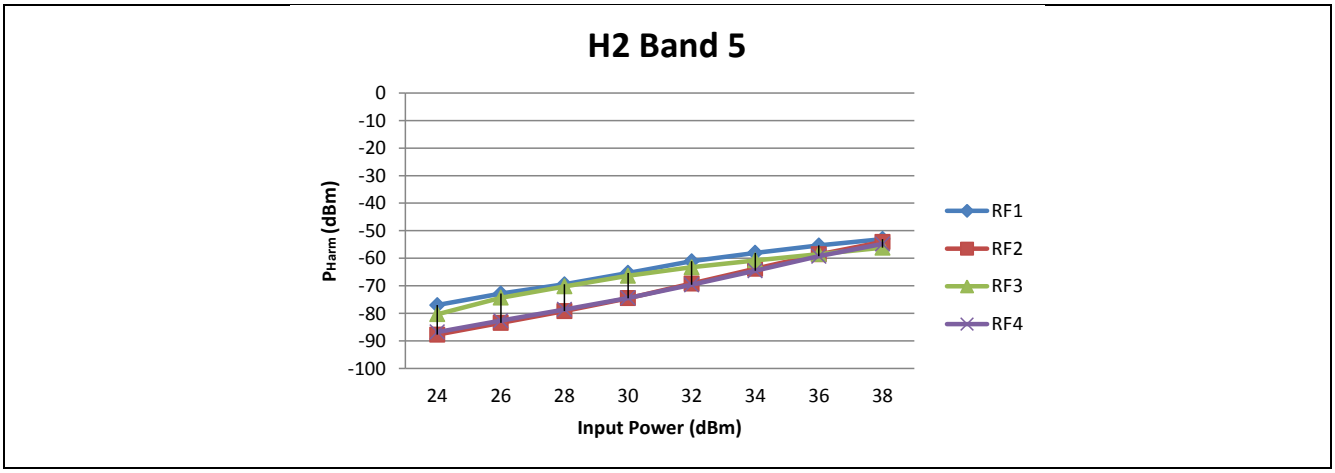

Figure 23 2nd harmonics at fc=836,5MHz, 2fc=1673MHz

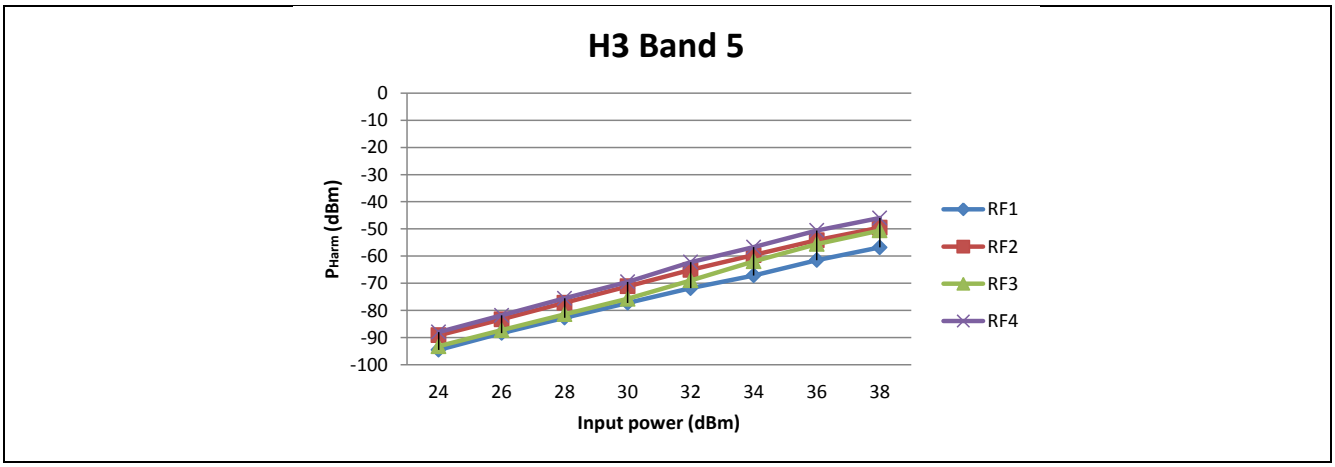

Figure 24 3rd harmonics at fc=836,5MHz, 3fc=2509,5MHz

Table 19 Harmonic products of Band 5 LTE

		Band 5							
		H2 (dBm)	H2 (dBm)	H2 (dBm)	H2 (dBm)	H3 (dBm)	H3 (dBm)	H3 (dBm)	H3 (dBm)
		RF1	RF2	RF3	RF4	RF1	RF2	RF3	RF4
RFin (dBm)	24	-77.01	-87.72	-80.33	-86.77	-94.49	-89.15	-93.17	-87.94
	26	-72.79	-83.43	-74.29	-82.63	-88.33	-83.29	-87.25	-81.82
	28	-69.43	-79.17	-70.22	-78.58	-82.69	-77.17	-81.39	-75.52
	30	-65.32	-74.51	-66.33	-74.38	-77.23	-71.14	-75.72	-69.47
	32	-61.06	-69.17	-63.24	-69.61	-71.83	-65.08	-68.94	-62.23
	34	-58.01	-63.81	-60.78	-64.53	-67.12	-59.62	-61.92	-56.71
	36	-55.36	-58.58	-58.47	-59.26	-61.48	-54.16	-55.57	-50.58
	38	-53.01	-54.08	-56.17	-54.79	-56.81	-49.55	-50.56	-45.96

6.2.3 Harmonics for Band 7

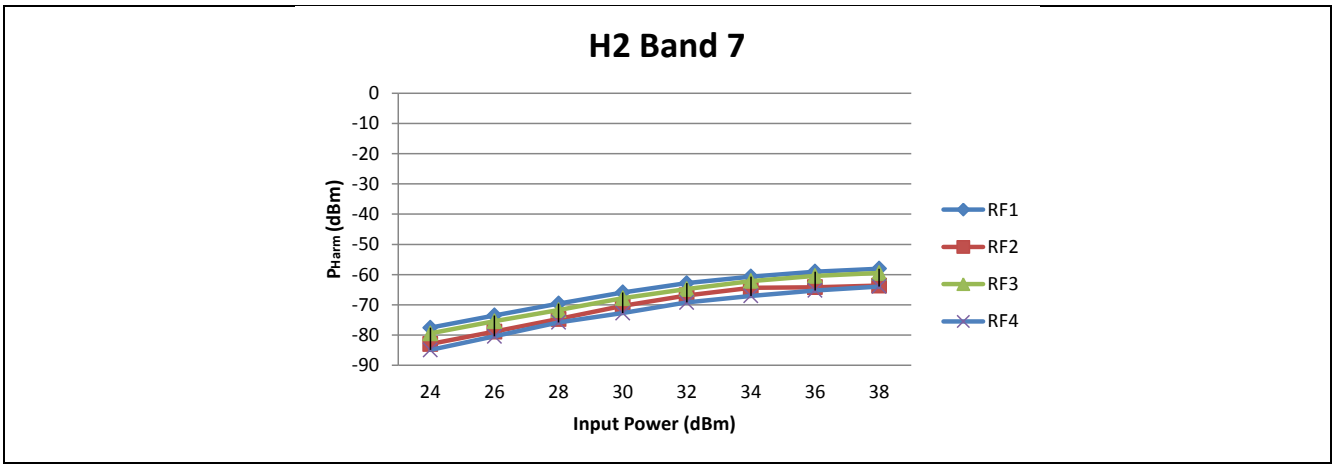

Figure 25 2nd harmonics at fc=2535MHz, 2fc=5070MHz

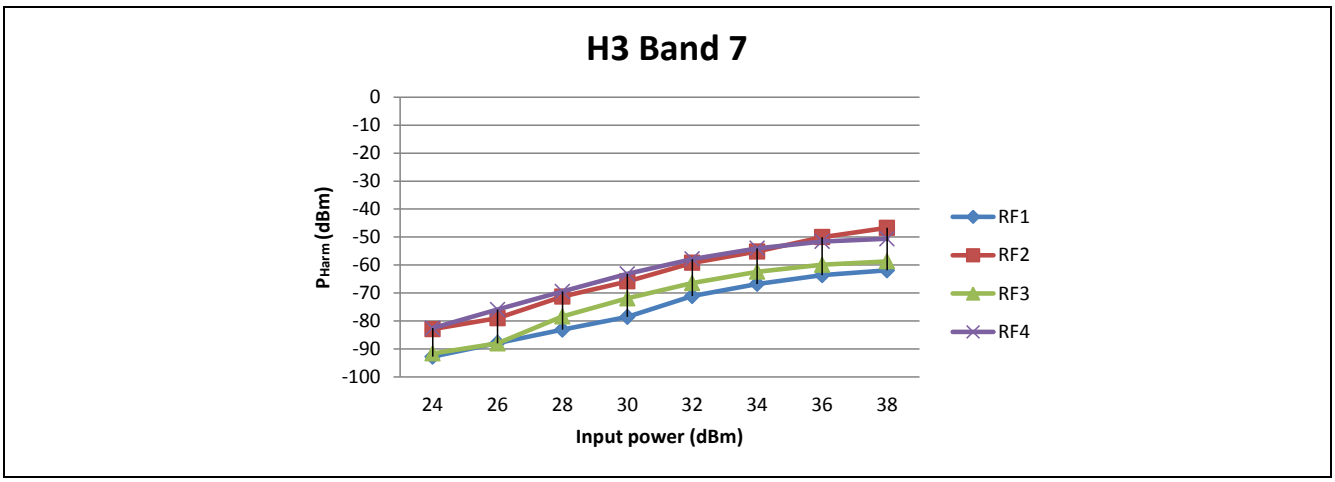

Figure 26 3rd harmonics at fc=2535MHz, 3fc=7605MHz

Table 20 Harmonic products of Band 7 LTE

		Band 7							
		H2 (dBm)	H2 (dBm)	H2 (dBm)	H2 (dBm)	H3 (dBm)	H3 (dBm)	H3 (dBm)	H3 (dBm)
		RF1	RF2	RF3	RF4	RF1	RF2	RF3	RF4
RFin (dBm)	24	-77.54	-82.97	-79.45	-84.91	-92.74	-82.92	-91.59	-82.54
	26	-73.49	-78.85	-75.45	-80.42	-87.88	-78.98	-87.98	-75.91
	28	-69.57	-74.71	-71.76	-75.82	-83.08	-71.27	-78.37	-69.45
	30	-65.91	-70.35	-67.84	-72.75	-78.52	-65.86	-71.89	-63.19
	32	-62.81	-66.87	-64.79	-69.22	-71.08	-59.23	-66.46	-57.85
	34	-60.67	-64.38	-62.15	-67.04	-66.77	-55.18	-62.38	-54.01
	36	-59.03	-64.17	-60.45	-65.24	-63.62	-50.02	-59.91	-51.58
	38	-58.05	-63.66	-59.48	-63.95	-61.89	-46.69	-58.65	-50.64

6.2.4 Harmonics for Band 13

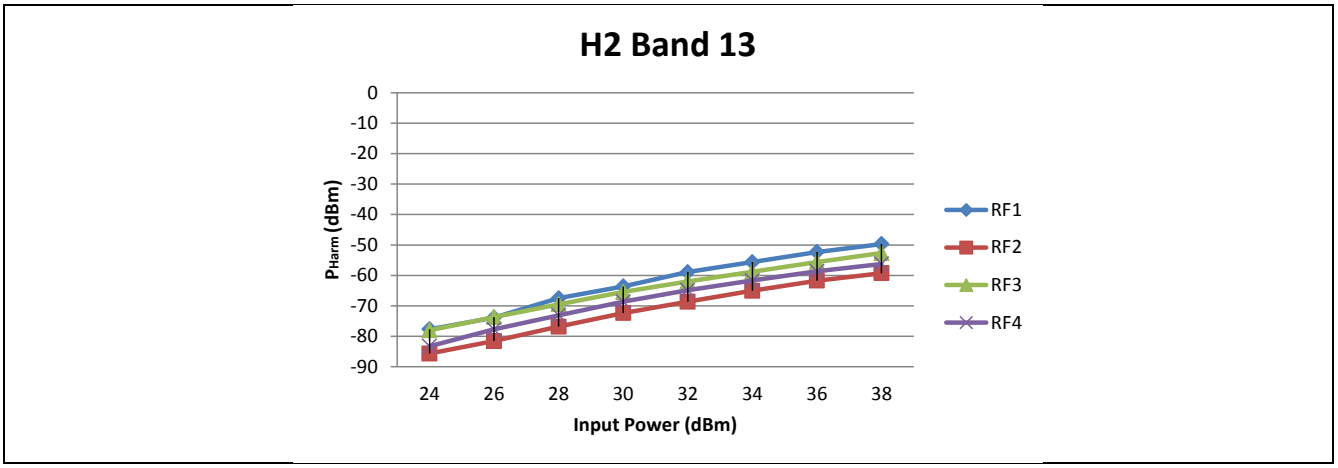

Figure 27 2nd harmonics at fc=782MHz, 2fc=1564MHz

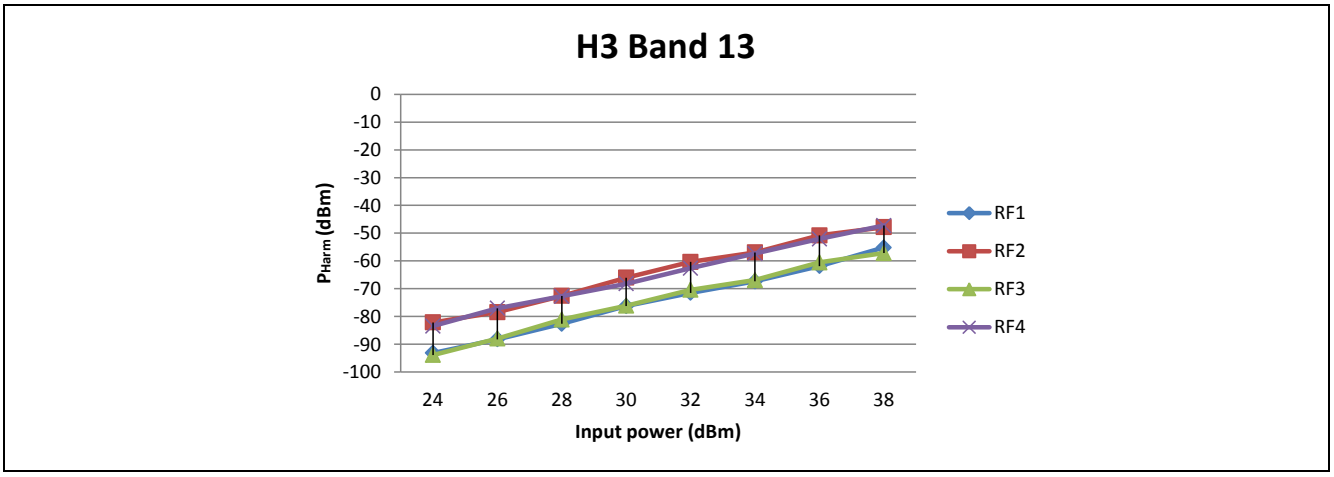

Figure 28 3rd harmonics at fc=782MHz, 3fc=2346MHz

Table 21 Harmonic products of Band 13 LTE

		Band 13							
		H2 (dBm)	H2 (dBm)	H2 (dBm)	H2 (dBm)	H3 (dBm)	H3 (dBm)	H3 (dBm)	H3 (dBm)
		RF1	RF2	RF3	RF4	RF1	RF2	RF3	RF4
RFin (dBm)	24	-77.69	-85.67	-78.01	-83.26	-93.13	-82.14	-93.87	-83.46
	26	-73.88	-81.57	-73.69	-77.71	-88.24	-78.43	-87.96	-77.05
	28	-67.49	-76.84	-69.51	-73.11	-82.61	-72.58	-81.07	-72.72
	30	-63.61	-72.36	-65.46	-68.64	-76.25	-66.03	-76.14	-68.22
	32	-58.91	-68.65	-61.95	-64.88	-71.47	-60.36	-70.38	-62.63
	34	-55.63	-65.03	-58.81	-61.68	-67.34	-56.95	-66.91	-57.36
	36	-52.32	-61.72	-55.57	-58.66	-61.85	-50.78	-60.51	-52.09
	38	-49.71	-59.26	-52.69	-56.24	-55.15	-47.85	-57.18	-47.24

7 Evaluation Board and Layout Information

7.1 Evaluation Board

In this application note, the following PCB is used:

PCB Marking: **BGS12PN10**

PCB material: **Rogers**

ε_r of PCB material: **3.55**

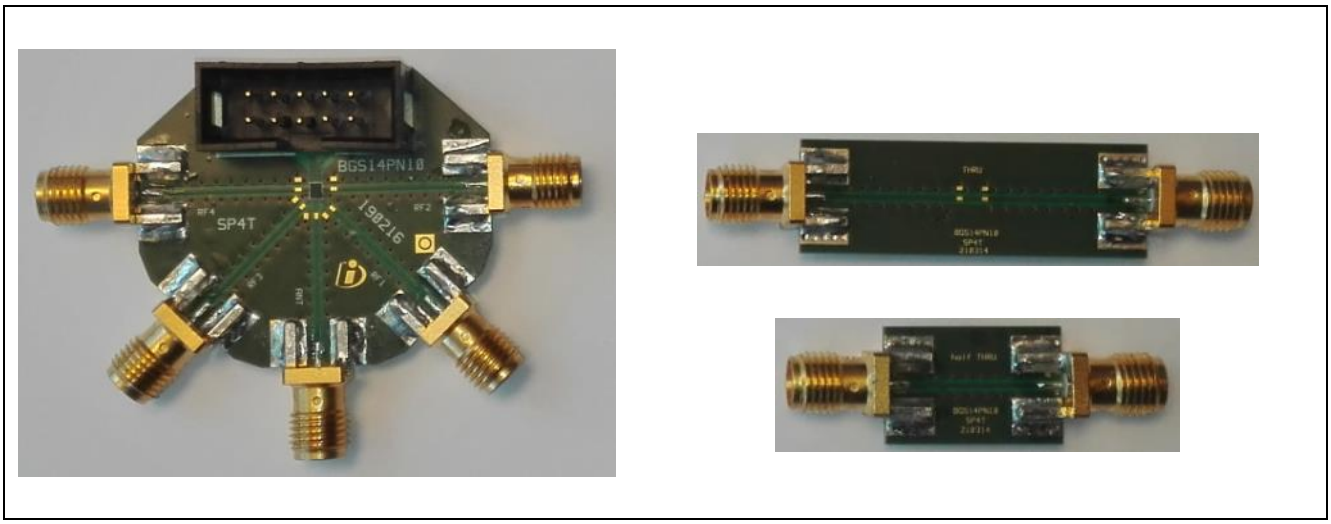

Figure 29 BGS14PN10 Application Board and deembedding kit

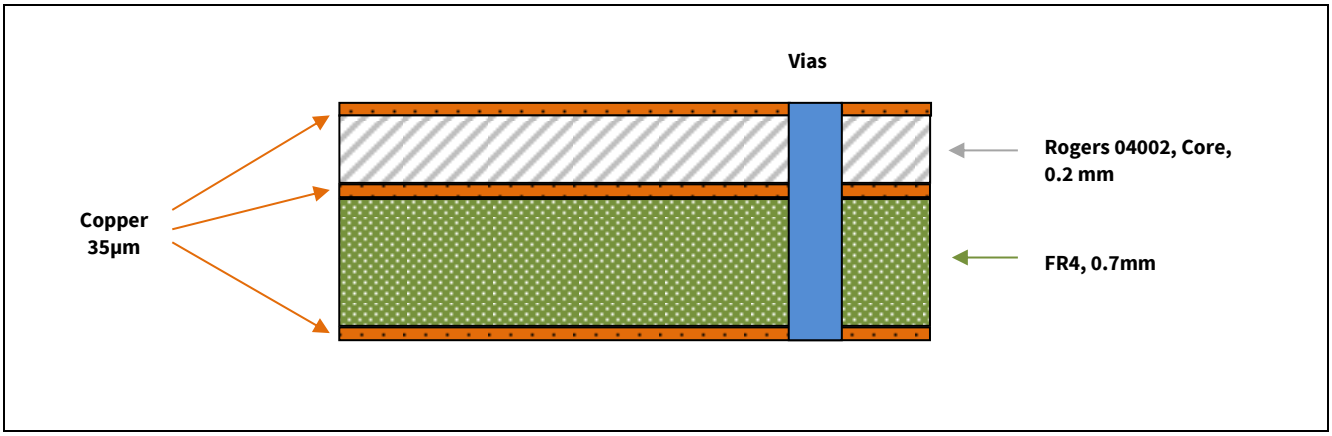

Figure 30 PCB cross-section of the evaluation board for BGS14PN10

7.2 Measurement description and deembedding

Below is a picture of the evaluation board used for the measurements (Figure 31). The board is designed in the way that all connecting 50 Ohm lines have the same length.

To get correct called “device level” measurement values for the insertion loss of the BGS14PN10 all influences and losses of the evaluation board, lines and connectors have to be eliminated. Therefore a separate de-embedding board, representing the line length is necessary.

After full port calibration of the network analyzer (NWA) a deembedding has to be done in several steps:

- Use an SMA connector whose inner conductor has been removed to tune out one of the SMA to PCB transitions using the port extension on one port (Figure 31). Turn port extensions on.
- Measure S21 of the half-thru structure (Figure 29, smallest board) with port extension enabled. The result is the de-embedding of S21 including only one SMA connector and the transmission line to the chip. Store this as S-parameter (s2p) file.
- Turn all port extension off.
- Load the stored s-parameter file as de-embedding on all used NWA ports
- Check insertion loss with the de-embedding through board (Figure 29 right upper board)

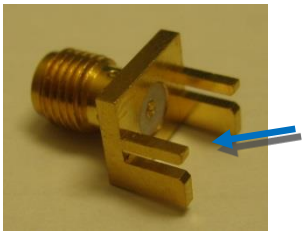

Figure 31 SMA connector for deembeding procedure

If the check of the deembedding shows an insertion loss of the through about +- 0.04 dB (depending on the measurement setup accuracy, e.g. NWA) then the Device itself can be measured.

8 Authors

Renat Rius, Application Engineer of Business Unit “RF and Protection Devices”
André Dewai, Senior Application Engineer of the Business Unit “RF and Protection Devices”

Authors

Revision History

Major changes since the last revision

Page or Reference	Description of change

Trademarks of Infineon Technologies AG
µHVIC™, µIPM™, µPFC™, AU-ConvertIR™, AURIX™, C166™, CanPAK™, CIPOS™, CIPURSE™, CoolDP™, CoolGaN™, COOLiR™, CoolMOS™, CoolSET™, CoolSiC™, DAVE™, DI-POL™, DirectFET™, DrBlade™, EasyPIM™, EconoBRIDGE™, EconoDUAL™, EconoPACK™, EconoPIM™, EiceDRIVER™, eupec™, FCOS™, GaNpowIR™, HEXFET™, HITFET™, HybridPACK™, iMOTION™, IRAM™, ISOFACE™, IsoPACK™, LEDrivIR™, LITIX™, MIPAQ™, ModSTACK™, my-d™, NovalithIC™, OPTIGA™, OptiMOS™, ORIGA™, PowIRaudio™, PowIRStage™, PrimePACK™, PrimeSTACK™, PROFET™, PRO-SIL™, RASIC™, REAL3™, SmartLEWIS™, SOLID FLASH™, SPOC™, StrongIRFET™, SupIRBuck™, TEMPFET™, TRENCHSTOP™, TriCore™, UHVIC™, XHP™, XMC™

Trademarks updated November 2015

Other Trademarks
All referenced product or service names and trademarks are the property of their respective owners.

Edition 2016-08-25
Published by
Infineon Technologies AG
81726 Munich, Germany

© 2016 Infineon Technologies AG. All Rights Reserved.

Do you have a question about this document?
Email: erratum@infineon.com

Document reference
<AN_2016_06_PL32_005>

IMPORTANT NOTICE
The information contained in this application note is given as a hint for the implementation of the product only and shall in no event be regarded as a description or warranty of a certain functionality, condition or quality of the product. Before implementation of the product, the recipient of this application note must verify any function and other technical information given herein in the real application. Infineon Technologies hereby disclaims any and all warranties and liabilities of any kind (including without limitation warranties of non-infringement of intellectual property rights of any third party) with respect to any and all information given in this application note.

The data contained in this document is exclusively intended for technically trained staff. It is the responsibility of customer's technical departments to evaluate the suitability of the product for the intended application and the completeness of the product information given in this document with respect to such application.

For further information on the product, technology, delivery terms and conditions and prices please contact your nearest Infineon Technologies office (**www.infineon.com**).

WARNINGS
Due to technical requirements products may contain dangerous substances. For information on the types in question please contact your nearest Infineon Technologies office.

Except as otherwise explicitly approved by Infineon Technologies in a written document signed by authorized representatives of Infineon Technologies, Infineon Technologies' products may not be used in any applications where a failure of the product or any consequences of the use thereof can reasonably be expected to result in personal injury.