XMC4000

Microcontroller Series for Industrial Applications

Digital Power Factor Correction using XMC4400

Application Guide

V1.0 2013-06

Microcontrollers

Edition 2013-06

Published by Infineon Technologies AG,

81726 Munich, Germany.

© 2013 Infineon Technologies AG

All Rights Reserved.

LEGAL DISCLAIMER

THE INFORMATION GIVEN IN THIS APPLICATION NOTE IS GIVEN AS A HINT FOR THE IMPLEMENTATION OF THE INFINEON TECHNOLOGIES COMPONENT ONLY AND SHALL NOT BE REGARDED AS ANY DESCRIPTION OR WARRANTY OF A CERTAIN FUNCTIONALITY, CONDITION OR QUALITY OF THE INFINEON TECHNOLOGIES COMPONENT. THE RECIPIENT OF THIS APPLICATION NOTE MUST VERIFY ANY FUNCTION DESCRIBED HEREIN IN THE REAL APPLICATION. INFINEON TECHNOLOGIES HEREBY DISCLAIMS ANY AND ALL WARRANTIES AND LIABILITIES OF ANY KIND (INCLUDING WITHOUT LIMITATION WARRANTIES OF NON-INFRINGEMENT OF INTELLECTUAL PROPERTY RIGHTS OF ANY THIRD PARTY) WITH RESPECT TO ANY AND ALL INFORMATION GIVEN IN THIS APPLICATION NOTE.

Information

For further information on technology, delivery terms and conditions and prices, please contact the nearest Infineon Technologies Office (**www.infineon.com**).

Warnings

Due to technical requirements, components may contain dangerous substances. For information on the types in question, please contact the nearest Infineon Technologies Office.

Infineon Technologies components may be used in life-support devices or systems only with the express written approval of Infineon Technologies, if a failure of such components can reasonably be expected to cause the failure of that life-support device or system or to affect the safety or effectiveness of that device or system. Life support devices or systems are intended to be implanted in the human body or to support and/or maintain and sustain and/or protect human life. If they fail, it is reasonable to assume that the health of the user or other persons may be endangered.

Trademarks of Infineon Technologies AG

AURIX™, C166™, CanPAK™, CIPOS™, CIPURSE™, EconoPACK™, CoolMOS™, CoolSET™, CORECONTROL™, CROSSAVE™, DAVE™, DI-POL™, EasyPIM™, EconoBRIDGE™, EconoDUAL™, EconoPIM™, EconoPACK™, EiceDRIVER™, eupec™, FCOS™, HITFET™, HybridPACK™, I²RF™, ISOFACE™, IsoPACK™, MIPAQ™, ModSTACK™, my-d™, NovalithIC™, OptiMOS™, ORIGA™, POWERCODE™; PRIMARION™, PrimePACK™, PrimeSTACK™, PRO-SIL™, PROFET™, RASIC™, ReverSave™, SatRIC™, SIEGET™, SINDRION™, SIPMOS™, SmartLEWIS™, SOLID FLASH™, TEMPFET™, thinQ!™, TRENCHSTOP™, TriCore™.

Other Trademarks

Advance Design System™ (ADS) of Agilent Technologies, AMBA™, ARM™, MULTI-ICE™, KEIL™, PRIMECELL™, REALVIEW™, THUMB™, µVision™ of ARM Limited, UK. AUTOSAR™ is licensed by AUTOSAR development partnership. Bluetooth™ of Bluetooth SIG Inc. CAT-iq™ of DECT Forum. COLOSSUS™, FirstGPS™ of Trimble Navigation Ltd. EMV™ of EMVCo, LLC (Visa Holdings Inc.). EPCOS™ of Epcos AG. FLEXGO™ of Microsoft Corporation. FlexRay™ is licensed by FlexRay Consortium. HYPERTERMINAL™ of Hilgraeve Incorporated. IEC™ of Commission Electrotechnique Internationale. IrDA™ of Infrared Data Association Corporation. ISO™ of INTERNATIONAL ORGANIZATION FOR STANDARDIZATION. MATLAB™ of MathWorks, Inc. MAXIM™ of Maxim Integrated Products, Inc. MICROTEC™, NUCLEUS™ of Mentor Graphics Corporation. MIPI™ of MIPI Alliance, Inc. MIPS™ of MIPS Technologies, Inc., USA. muRata™ of MURATA MANUFACTURING CO., MICROWAVE OFFICE™ (MWO) of Applied Wave Research Inc., OmniVision™ of OmniVision Technologies, Inc. Openwave™ Openwave Systems Inc. RED HAT™ Red Hat, Inc. RFMD™ RF Micro Devices, Inc. SIRIUS™ of Sirius Satellite Radio Inc. SOLARIS™ of Sun Microsystems, Inc. SPANSION™ of Spansion LLC Ltd. Symbian™ of Symbian Software Limited. TAIYO YUDEN™ of Taiyo Yuden Co. TEAKLITE™ of CEVA, Inc. TEKTRONIX™ of Tektronix Inc. TOKO™ of TOKO KABUSHIKI KAISHA TA. UNIX™ of X/Open Company Limited. VERILOG™, PALLADIUM™ of Cadence Design Systems, Inc. VLYNQ™ of Texas Instruments Incorporated. VXWORKS™, WIND RIVER™ of WIND RIVER SYSTEMS, INC. ZETEX™ of Diodes Zetex Limited.

Last Trademarks Update 2011-11-11

Revision History

Major changes since previous revision

Date	Version	Changed By	Change Description
12 Jun 2013	1.0		Initial version

We Listen to Your Comments

Is there any information in this document that you feel is wrong, unclear or missing? Your feedback will help us to continuously improve the quality of our documentation. Please send your proposal (including a reference to this document title/number) to:

ctdd@infineon.com



Table of Contents

Revision History **4**

Table of Contents **5**

1 Introduction **6**
1.1 Power Factor Correction 6
1.2 Converter Topology 7
1.3 Mode of Operation 7
1.4 Control Method 8

2 Digital Control in Power Conversion **9**

3 Digital Controller Implementation using XMC4400 ..... **10**
3.1 Hardware Design 10
3.1.1 Block Diagram 10
3.2 Software Design 10
3.2.1 Abstraction Layer 10
3.2.2 Control Scheme 11
3.2.3 Interrupt Timing Diagram 12
3.2.4 Safety Feature: Output Over-voltage Check 13
3.2.5 List of DAVE3 Apps 13

4 Results **14**
4.1 Power Factor and Total Harmonic Distortion 14
4.2 Operating Waveforms 16
4.2.1 Start-Up Operation 16
4.2.2 Steady-State Operation 17

5 Conclusion **18**

6 References **19**

7 Appendix **20**
7.1 Schematics 20
7.2 Flowcharts 22
7.2.1 One Match Interrupt 22
7.2.2 Compare Match Interrupt 23
7.2.3 Over-voltage Interrupt 24

1 Introduction

This application guide describes the implementation of digital Power Factor Correction (PFC) operating in Continuous Conduction Mode (CCM) using XMC4400, a 32-bit ARM Cortex M4-based microcontroller from Infineon.

1.1 Power Factor Correction

The power factor quality in an AC system can be analysed by looking at two factors:

- The displacement angle
- The Total Harmonic Distortion (THD) of the input current waveform against input voltage

A small displacement angle will make the input current appear to be in the same phase as the input voltage, while a large displacement angle will make the input current out of phase from the input voltage.

Total Harmonic Distortion shows how close the shape of input current is to a pure sinusoid (input voltage is assumed to be pure sinusoid). The closer the shape of input current to sinusoidal, the lower the THD.

Power Factor Correction is achieved by forcing the input current to be in the same phase and shape as the input voltage. This will make the converter appear as a pure resistive load at the mains input.

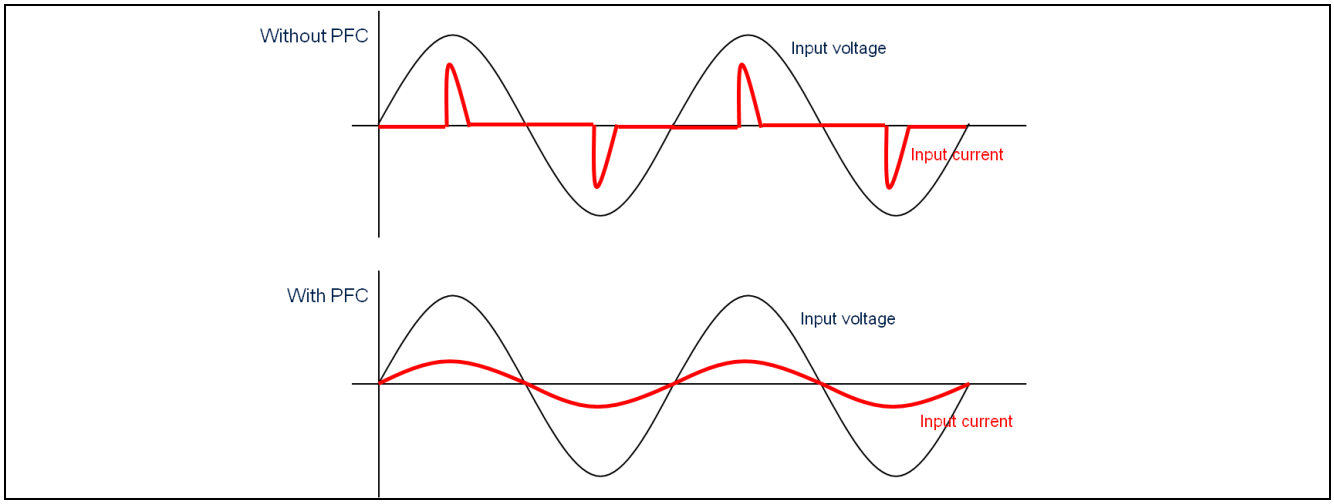

Figure 1 Input Current Waveforms with and without PFC

1.2 Converter Topology

A PFC circuit is achieved by adding another power topology, typically boost converter, after the rectifier circuit. Boost converter is chosen because it is very effective and is easy to implement. The input current shaping takes place in this stage by controlling the power switch.

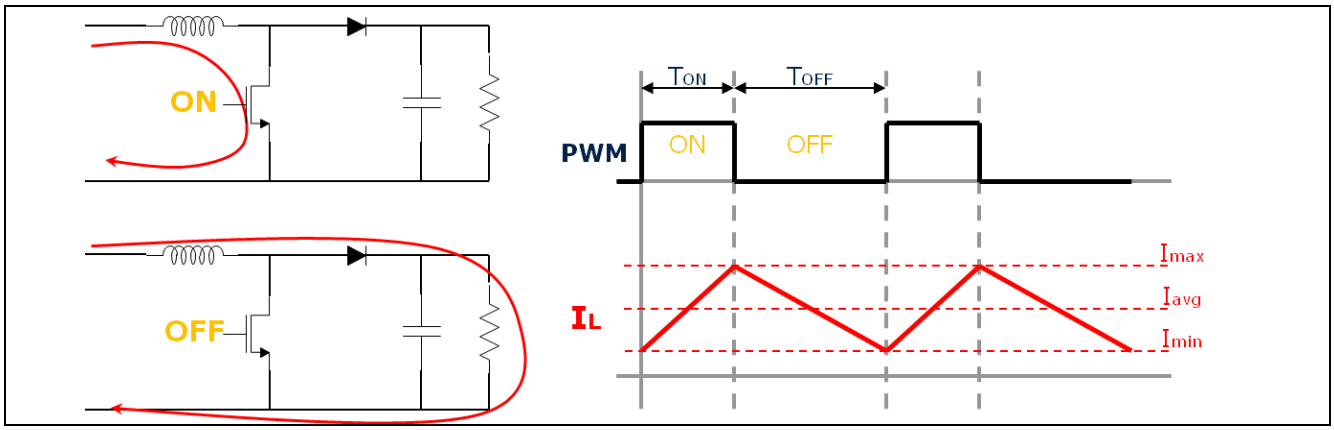

Figure 2 Boost Converter and Operating Waveforms

1.3 Mode of Operation

The implemented PFC circuit is designed to operate in Continuous Conduction Mode (CCM). The current in the inductor never reaches zero in a given switching cycle. This effect reduces voltage swing, resulting in lower switching losses. In addition, lower ripple current results in lower inductor core losses. Less voltage swing will also reduce EMI and allows a smaller input filter to be used.

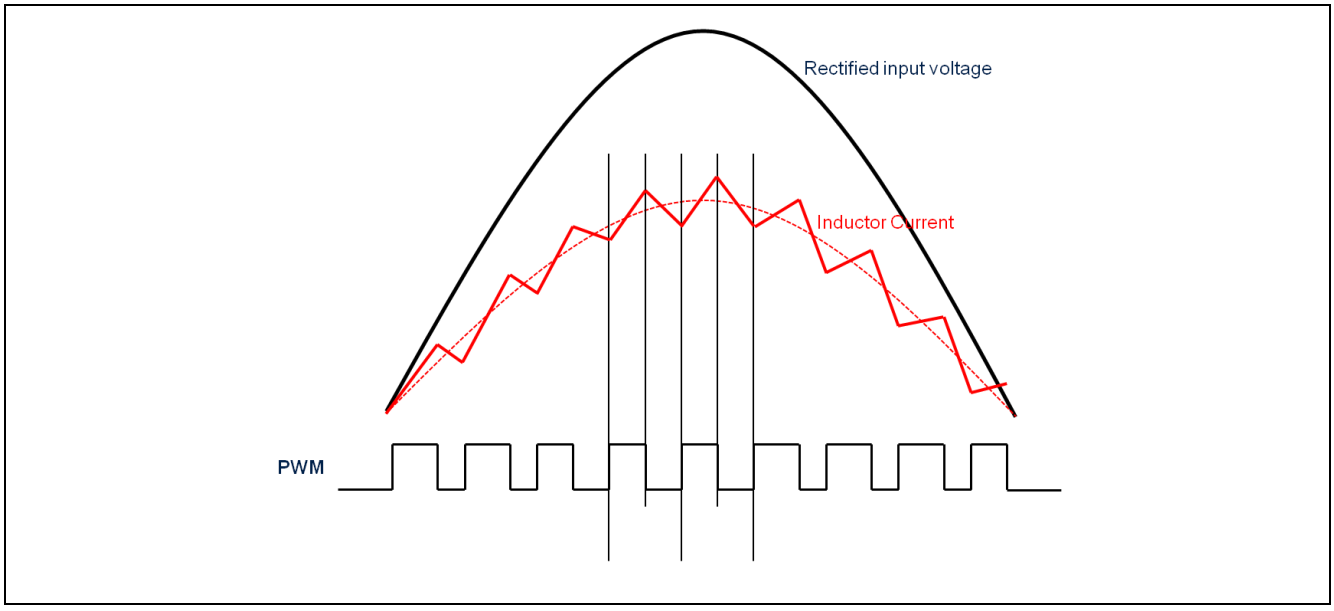

Figure 3 Continuous Conduction Mode Waveforms

1.4 Control Method

A Continuous Conduction Mode PFC is typically controlled with the average current control method. The overall control scheme is illustrated in the following figure:

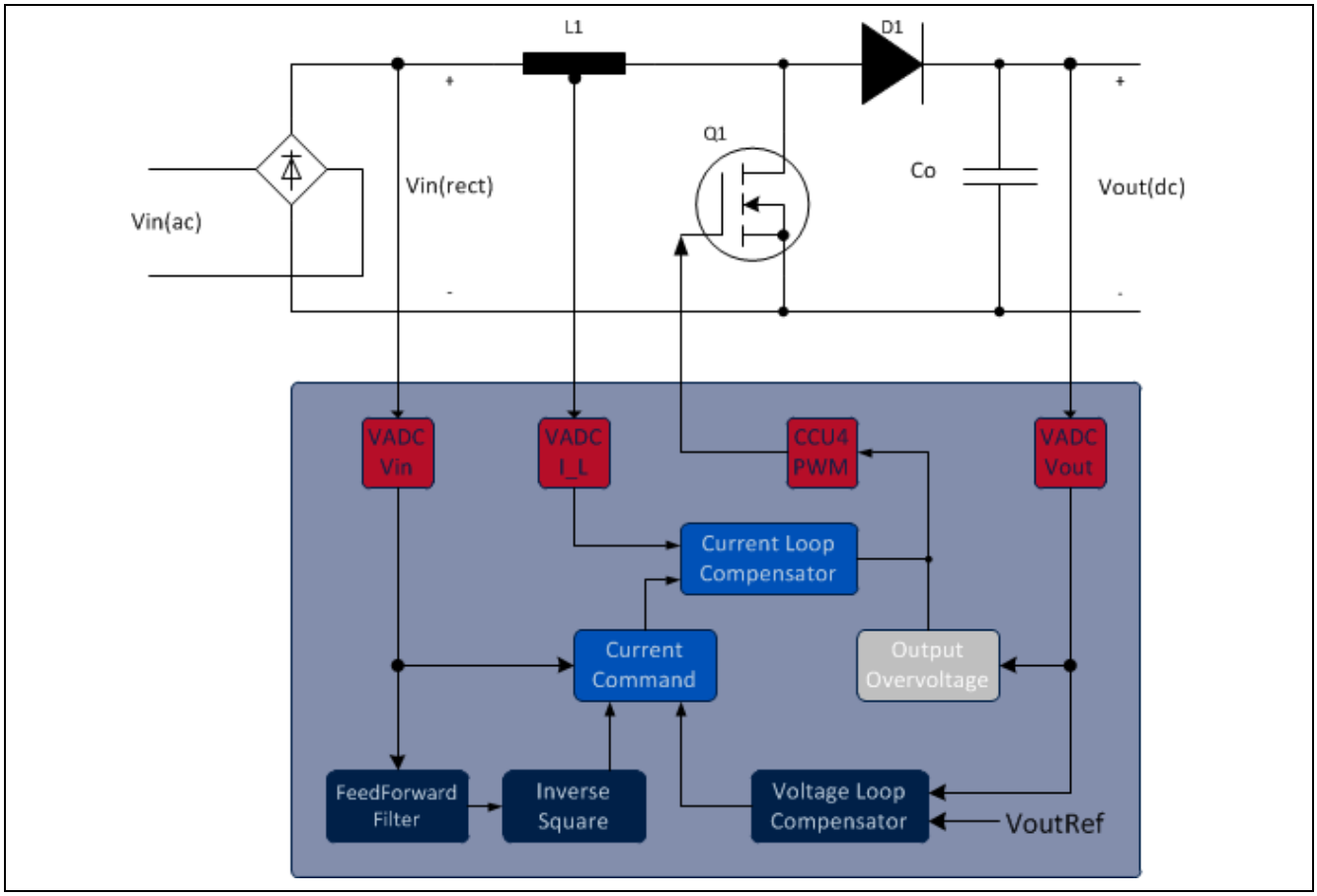

Figure 4 Average Current Control Mode

The control scheme consists of four main blocks:

1. Output voltage loop compensator
   - Responds to output load change and regulates the output voltage of the boost converter to stay constant. The reference value is set to a constant, typically at 400Vdc.
2. Current loop compensator
   - Monitors the inductor current and forces the inductor current to track the current reference so that it has the same shape as the input voltage. It has a dynamic reference value which looks like the input voltage.
3. Feed-forward filter
   - Helps to maintain a constant output power at reduced input voltage. The feed-forward filter will increase the current reference value when the input voltage is decreased, ensuring more current will be supplied at the output.
4. Current command
   - Processes the results from the feed-forward filter and output voltage loop compensator, and generates the reference signal for the current loop compensator.

2 Digital Control in Power Conversion

In the past, a Switched-Mode Power Supply (SMPS) was controlled using an analog solution. With the availability of low-cost, high-performance microcontrollers however, it is now possible to control SMPS digitally.

Digital control in power conversion offers several benefits over the analog counterpart. First, it offers a communication capability, which enables the power supply to detect and report fault conditions and notify the user. Several power supplies can be combined together for load sharing. The power supplies will communicate to balance the power supplied to the load.

Secondly, SMPS is a non-linear system. Using digital control, it is possible to implement complex, non-linear control algorithms to compensate for the non-linearity of the SMPS. In addition, since all the controllers can be implemented digitally, it reduces the component count for such complex control circuits, and hence reduces the overall power supply costs.

The PFC controller described in this application note is implemented using XMC4400, a 32-bit ARM Cortex M4 based microcontroller from Infineon. It has a single-cycle Multiply-Accumulate (MAC) instruction and Floating-Point Unit dedicated for calculation intensive algorithms. In addition, it also has dedicated control peripherals such as the Capture Compare Unit 4 (CCU4) module for PWM generation and a Versatile Analog-to-Digital (VADC) module for analog signal measurement, making it suitable for applications that require fast, cycle-by-cycle calculation such as the Average Current Control mode.

To simplify and speed up user programming, the XMC4000-family microcontrollers from Infineon are equipped with a free integrated development environment called DAVE3. DAVE3 introduces component-based programming using DAVE Apps to allow the user to easily configure and connect various peripherals. Two apps, namely PWMSP001 and ADC002, are used to configure the CCU4 and VADC modules, respectively. In addition, each app also provides APIs to control the peripheral during run-time.

The following figure shows the user interface, App Connectivity View and API documentation window from PWMSP001.

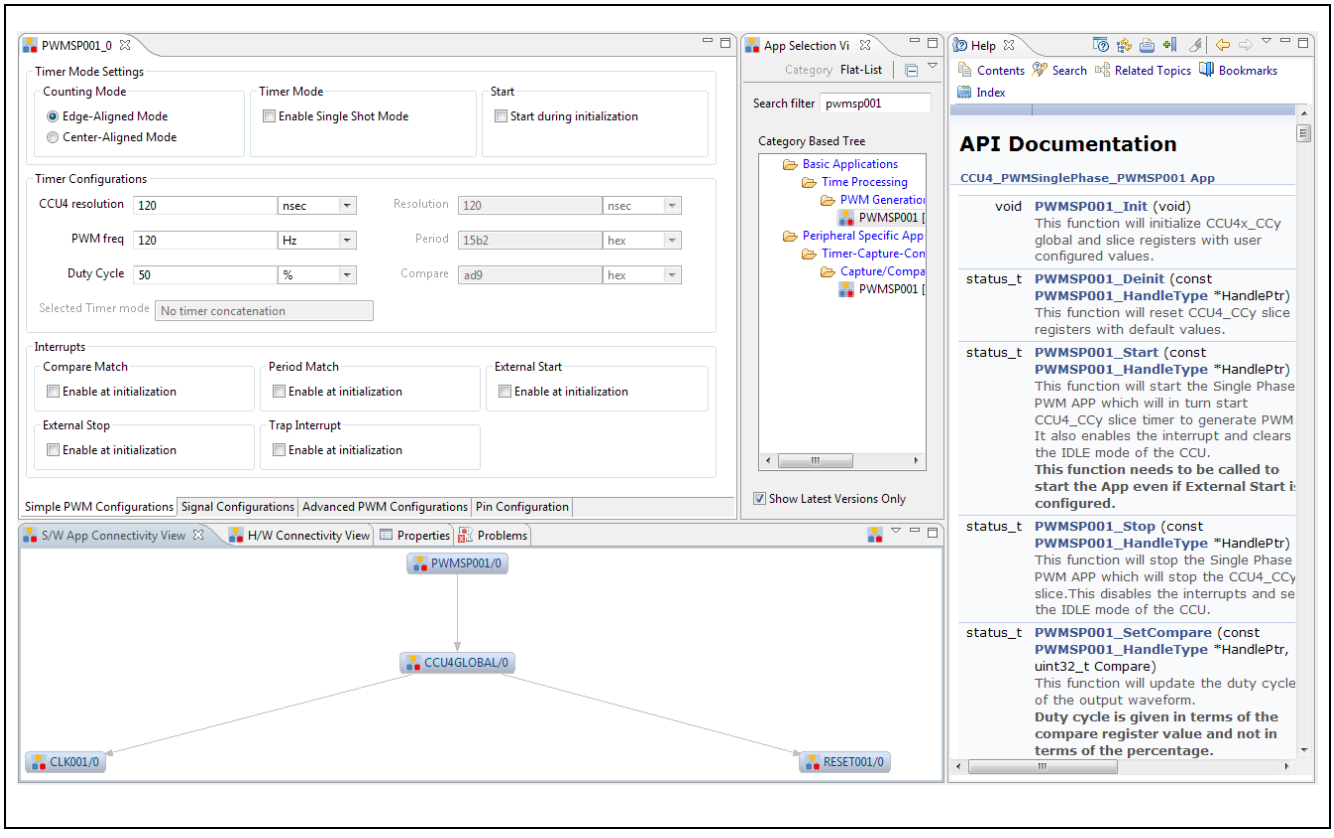

Figure 5 PWMSP001 User Interface

3 Digital Controller Implementation using XMC4400

3.1 Hardware Design

3.1.1 Block Diagram

This figure shows the block diagram of digital PFC hardware.

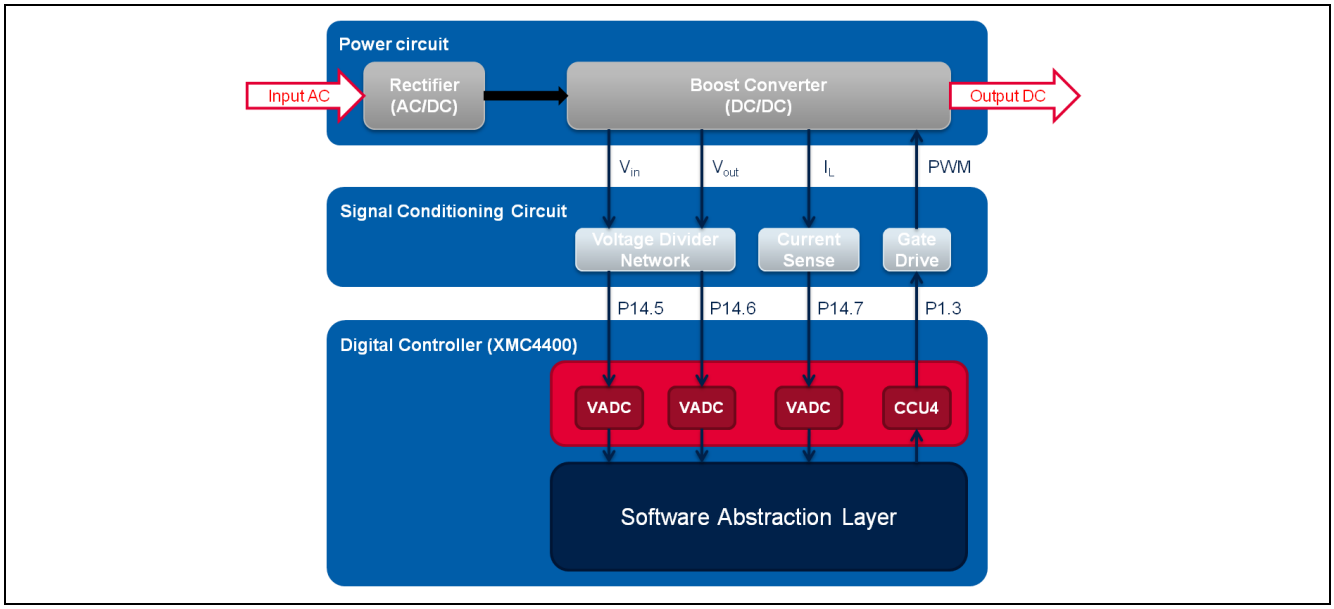

Figure 6 PFC Hardware Block Diagram

3.2 Software Design

3.2.1 Abstraction Layer

The next figure shows the block diagram of digital PFC software.

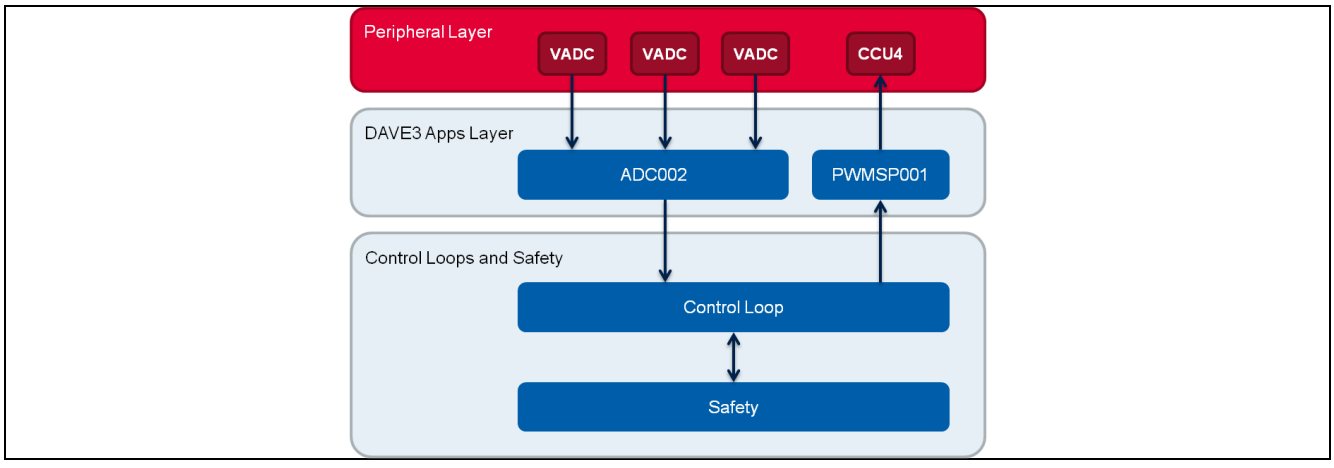

Figure 7 Software Abstraction Layer

3.2.2 Control Scheme

The overall control scheme of digital PFC software is shown in the next figure.

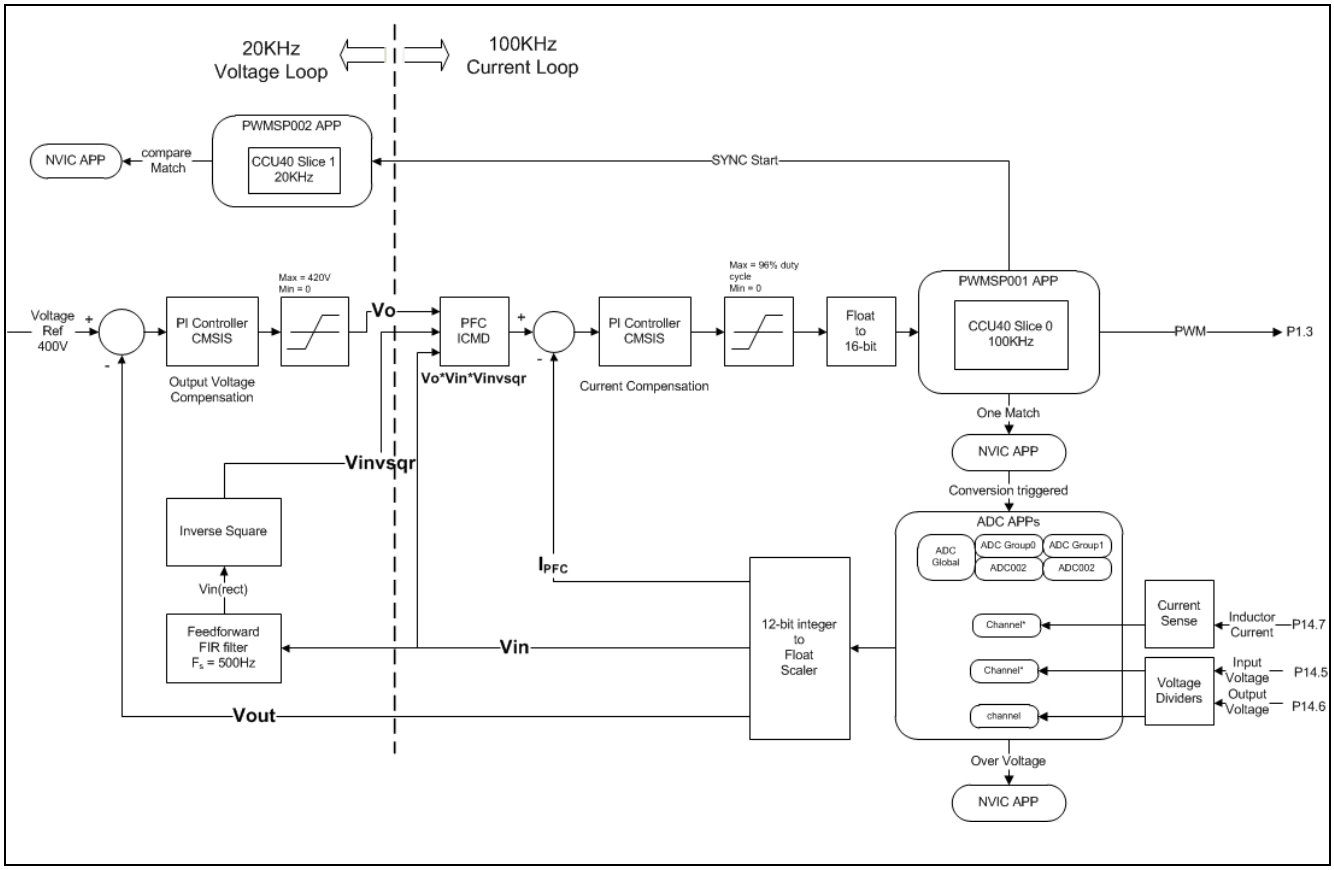

Figure 8 PFC Control Scheme Software Block

There are two control loops implemented:

- Output voltage loop
  - Operates at 20 KHz, compensating the output voltage to produce constant output of 400Vdc.
- Current loop
  - Operates at every PWM switching frequency (100 KHz), compensating the inductor current on a cycle-by-cycle basis.

The implemented digital PFC controller consumes 2µs at every 10µs switching cycle; i.e. 20% of CPU load under normal operation, consuming another 4µs when the slower output voltage loop occurs. This makes the maximum CPU load at 60% when all interrupts are executed.

3.2.3 Interrupt Timing Diagram

The following figure shows the interrupt timing diagram with respect to inductor current waveform.

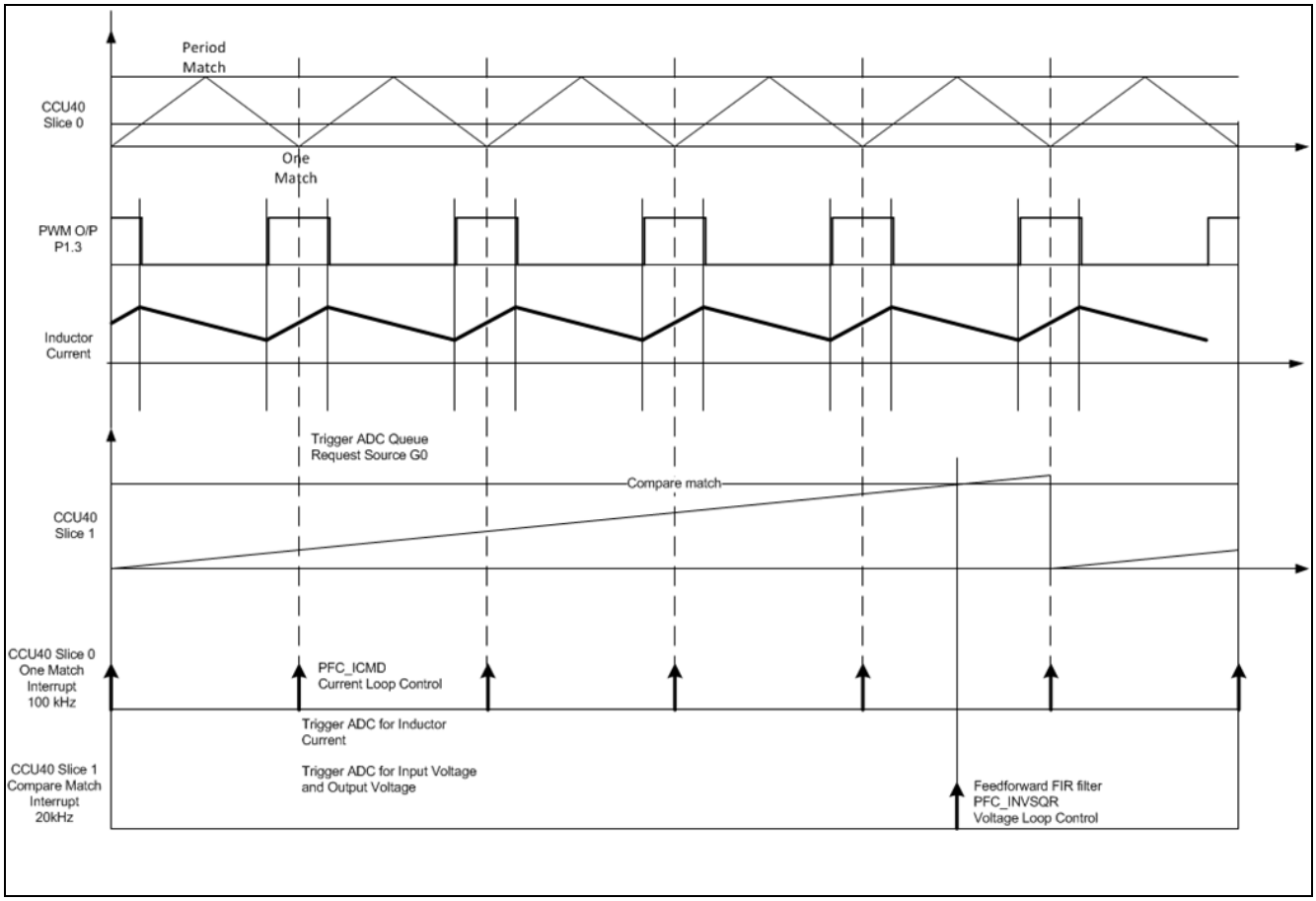

Figure 9 Interrupt Timing Diagram

3.2.4 Safety Feature: Output Over-voltage Check

Output voltage can swing up to a very high value during low load conditions. This voltage may exceed the voltage rating and damage the output capacitor.

The VADC peripheral has a built-in Limit Checking feature where it can automatically compare each digital conversion result to an upper and lower boundary value. A channel event is generated when the result of a comparison is outside of user-defined values.

The output voltage is measured and compared against user-defined values. In this implementation, two boundaries are defined; i.e. 370V and 450V as lower and upper boundary, respectively.

When the output voltage exceeds the upper boundary, the PWM will be switched off and the output voltage will decrease. When the output voltage reaches the lower boundary, the PWM will be turned on again.

The following figure illustrates the boundary checking mechanism.

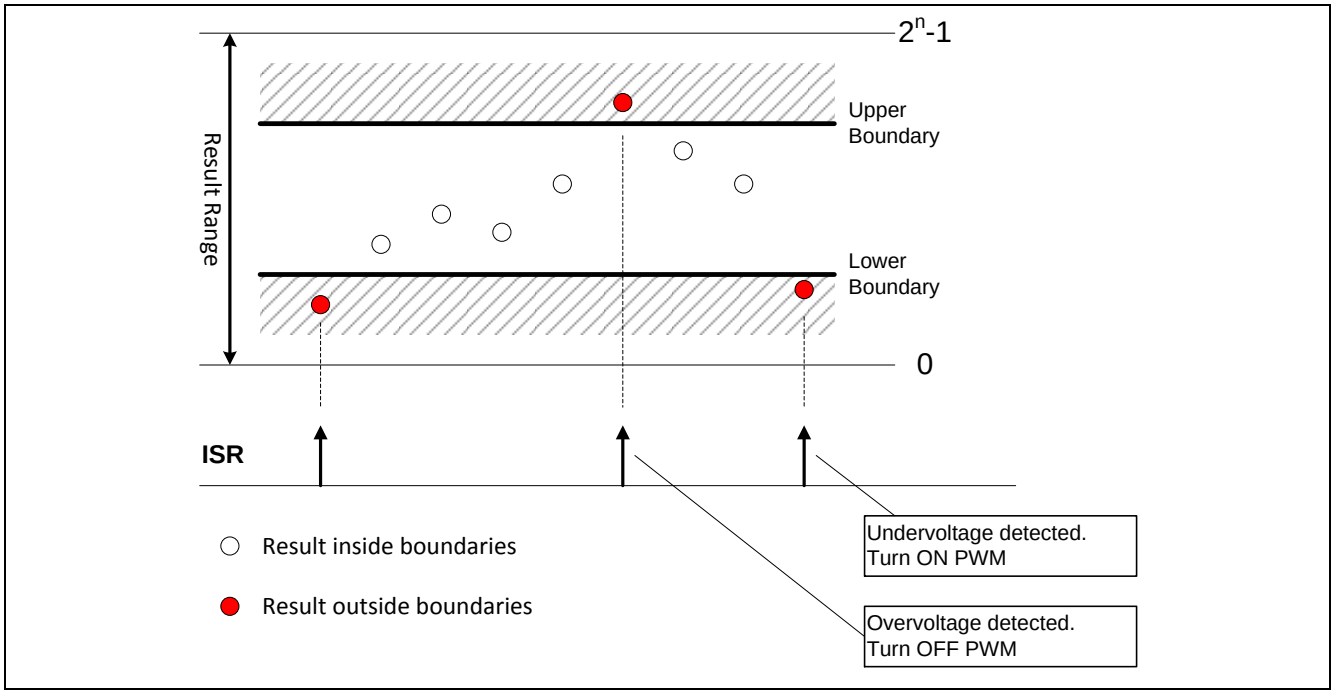

Figure 10 Output Over-voltage Check

3.2.5 List of DAVE3 Apps

The DAVE3 apps used in this implementation are listed and described in the following table.

Table 1 DAVE3 Apps used in PFC implementation

Apps Name	Description
PWMSP001	This app configures a slice from CCU4 to generate a single phase (non-complimentary) PWM signal
ADC002	This app configures a VADC kernel for signal measurements and channel event interrupt with boundary limits for output over-voltage checks

4 Results

The PFC supplies 350W at 100% load. It is designed to operate at both low line (115Vac) and high line (230Vac) while keeping the output voltage constant at 400Vdc. Two sets of control loop parameters (Kp and Ki) are given and selectable in the software, depending on the input voltage.

4.1 Power Factor and Total Harmonic Distortion

The following two tables show the achieved Power Factor and THD at low line (115Vac).

Table 2 Power Factor and THD at low line (115Vac) and 50Hz mains frequency

Vin (V)	Load									
	10%		20%		50%		75%		100%	
	PF	THD (%)	PF	THD (%)	PF	THD (%)	PF	THD (%)	PF	THD (%)
100	0.95	28.0	0.97	17.5	1.00	6.6	1.00	5.3	1.00	5.6
115	0.95	28.3	0.97	22.0	0.99	8.2	1.00	6.9	1.00	5.0
130	0.95	29.5	0.97	22.9	0.99	9.8	0.99	6.9	1.00	5.6
140	0.93	30.0	0.97	24.4	0.98	9.8	0.99	7.6	1.00	6.2

Table 3 Power Factor and THD at low line (115Vac) and 60Hz mains frequency

Vin (V)	Load									
	10%		20%		50%		75%		100%	
	PF	THD (%)	PF	THD (%)	PF	THD (%)	PF	THD (%)	PF	THD (%)
100	0.96	30.0	0.96	17.8	1.00	6.6	1.00	6.0	1.00	6.1
115	0.95	28.4	0.97	22.2	0.99	8.0	1.00	6.0	1.00	5.0
130	0.95	23.3	0.97	23.0	0.99	9.8	0.99	7.0	1.00	5.5
140	0.93	33.3	0.97	24.3	0.98	11.1	0.99	7.5	1.00	6.0

The following tables show the achieved Power Factor and THD at high line (230Vac).

Table 4 Power Factor and THD at high line (230Vac) and 50Hz mains frequency

Vin (V)	Load									
	10%		20%		50%		75%		100%	
	PF	THD (%)	PF	THD (%)	PF	THD (%)	PF	THD (%)	PF	THD (%)
200	0.92	32.6	0.91	30.0	0.99	13.6	1.00	6.6	1.00	4.9
220	0.48	32.8	0.93	31.0	0.98	16.6	0.99	9.5	1.00	5.3
230	0.40	32.1	0.93	33.0	0.98	16.7	0.99	10.3	1.00	5.5
240	0.60	32.6	0.93	34.6	0.98	20.5	0.99	10.2	1.00	6.3

Table 5 Power Factor and THD at high line (230Vac) and 60Hz mains frequency

Vin (V)	Load									
	10%		20%		50%		75%		100%	
	PF	THD (%)	PF	THD (%)	PF	THD (%)	PF	THD (%)	PF	THD (%)
200	0.91	32.0	0.95	29.3	0.99	14.0	0.99	7.4	1.00	6.0
220	0.40	34.0	0.95	33.0	0.98	16.5	0.99	9.9	1.00	6.1
230	0.45	34.0	0.92	34.0	0.98	17.2	0.99	10.5	1.00	6.5
240	0.50	33.0	0.92	34.6	0.98	19.0	0.99	11.1	0.99	7.0

4.2 Operating Waveforms

4.2.1 Start-Up Operation

The following figures show the start-up waveform of output voltage and input current at 100% load.

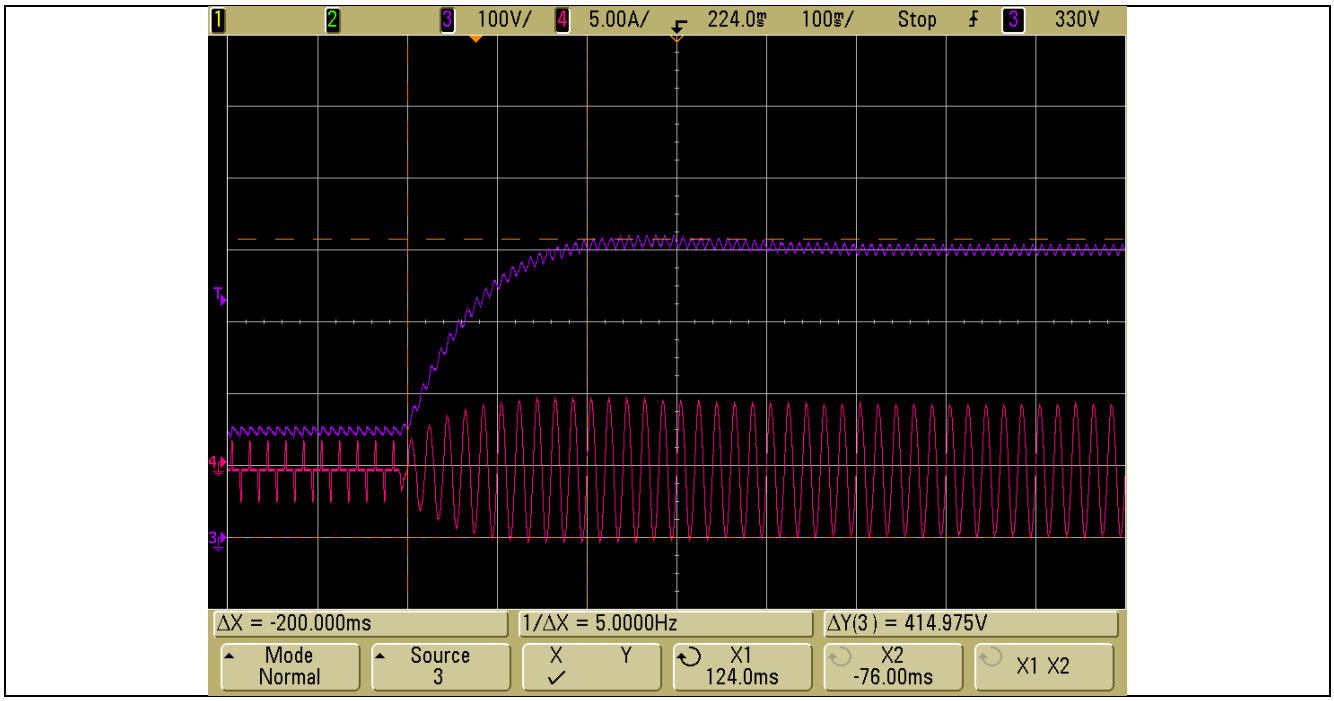

Figure 11 Start-Up Operating Waveforms at Low Line

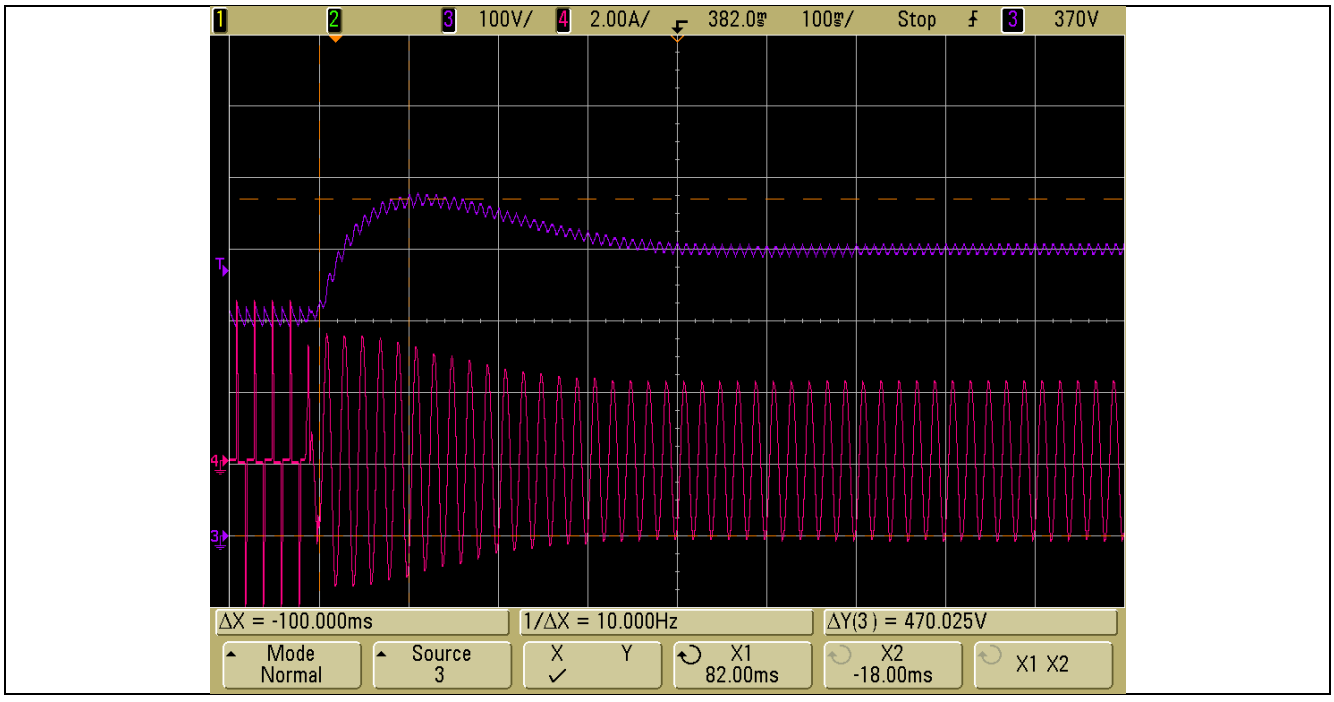

Figure 12 Start-Up Operating Waveforms at High Line

4.2.2 Steady-State Operation

Here we show the waveform of input voltage and input current during steady state operation.

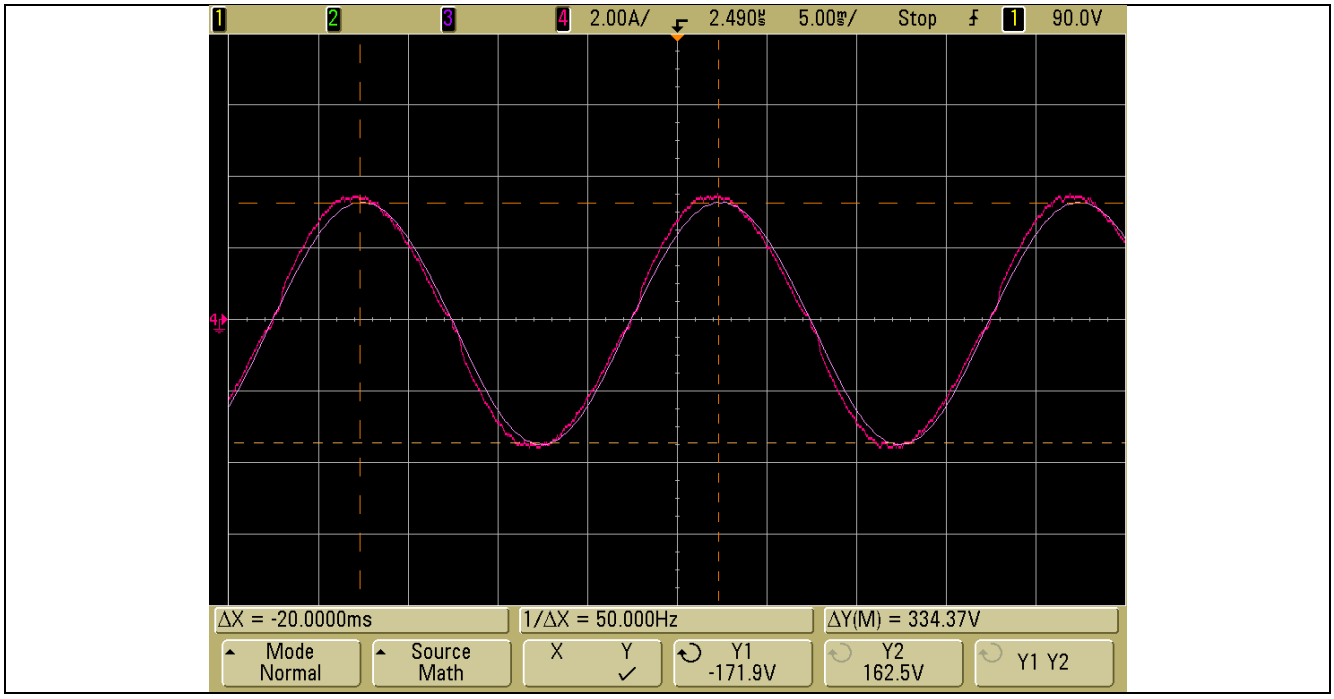

Figure 13 Steady-State Operating Waveforms at Low Line

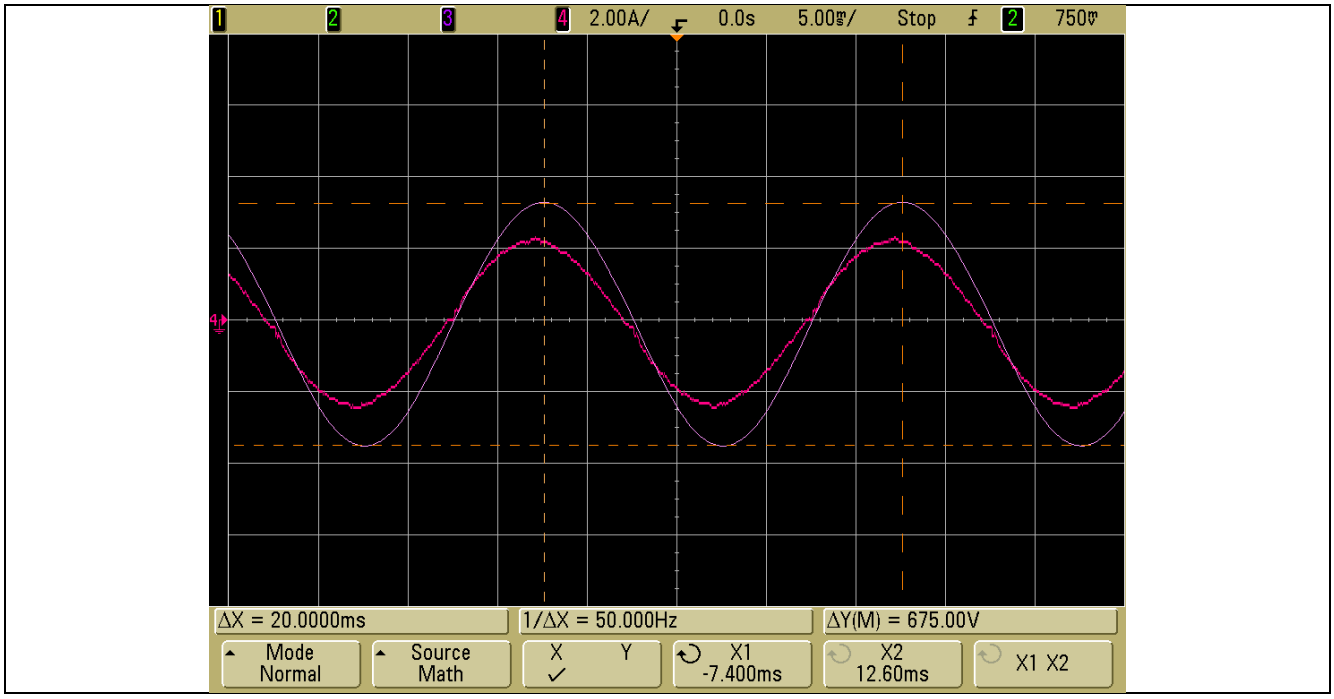

Figure 14 Steady-State Operating Waveforms at High Line

5 Conclusion

This application guide has described digital Power Factor Correction operating in Continuous Conduction Mode implemented on the XMC4400, an ARM Cortex M4-based microcontroller from Infineon. Two peripherals, namely VADC and CCU4, are used to implement the PFC controller. The PFC is controlled with the Average Current Control method operating at 100 KHz with an average of 20% CPU load.

The PFC is designed to operate at both low line (115Vac) and high line (230Vac), while keeping constant output voltage at 400Vdc. Two sets of control loop parameters are tuned and optimized for each operating line and are selectable by software. This feature highlights the benefit of digital control over the analog counterpart in which only one set of control loop parameters can be implemented and optimized across operating input voltage.

The PFC supplied 350W at 100% full load. The measurements are taken at low line and high line, 50Hz and 60Hz mains frequencies. The results show that the PFC can achieve a Power Factor close to 1.0 and THD at around 5.5% at full load.

This application guide has demonstrated the implementation of a digital controller for PFC with average CCM, which demands high processing power from the controller. The implementation shows that the XMC4400 is able to provide such processing power and the measurement results indicate that the digital controller can match, if not outperform, the performance of the analog controller.

6 References

[1] M. Xie, “Digital Control for Power Factor Correction”, Virginia Polytechnic Institute and State University, 2003

[2] L.H. Dixon, “Average Current Mode Control of Switching Power Supplies”, Unitrode Power Supply Design Seminar Manual SEM700, 1990

[3] L.H. Dixon, “High Power Factor Switching Preregulator Design Optimization”, Unitrode Power Supply Design Seminar Manual SEM700, 1990

[4] XMC4400 Reference Manual version 1.1, November 2012

7 Appendix

7.1 Schematics

The following figures show the schematics of the PFC.

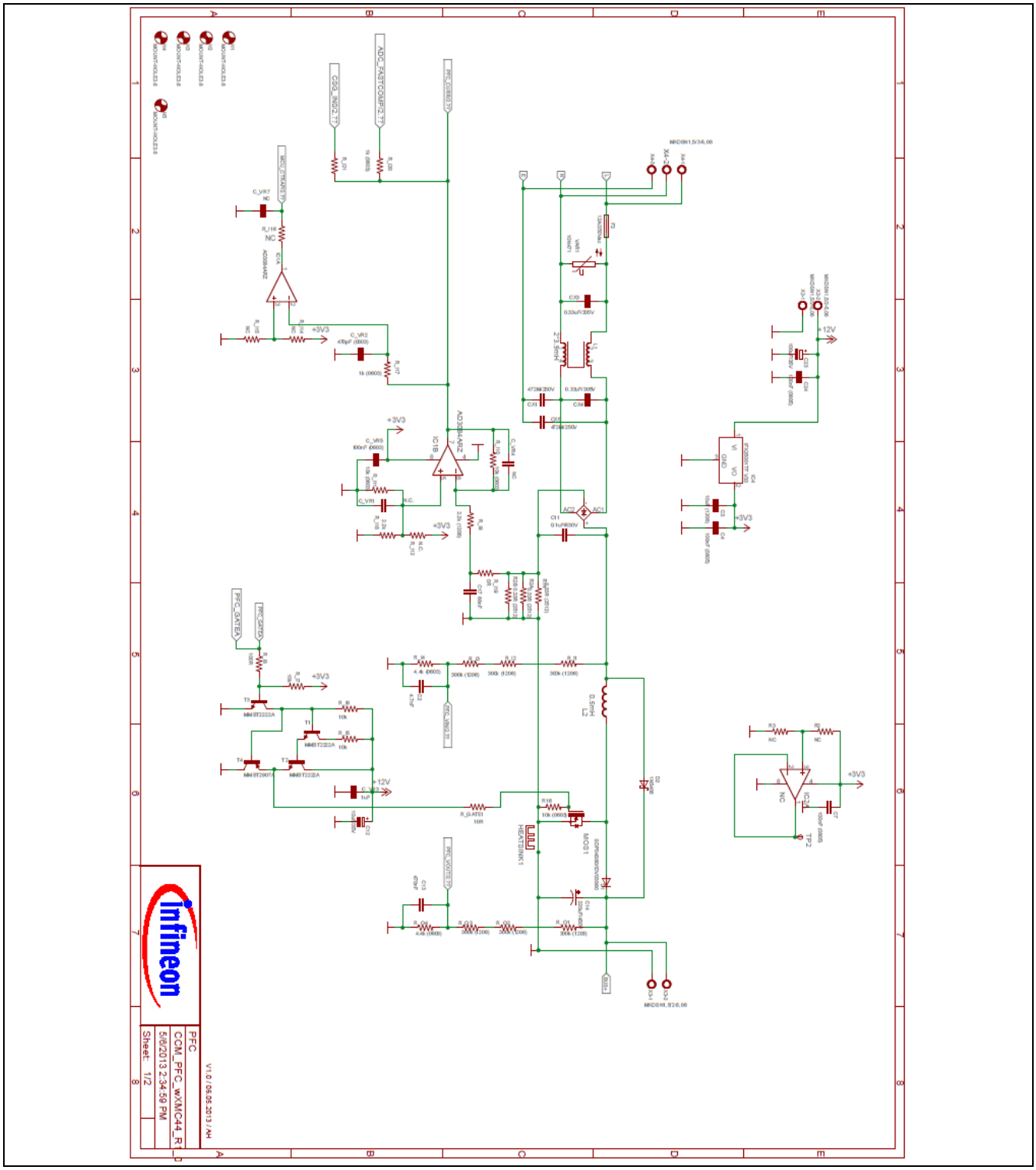

Figure 15 Power Circuit and Signal Conditioning Circuit

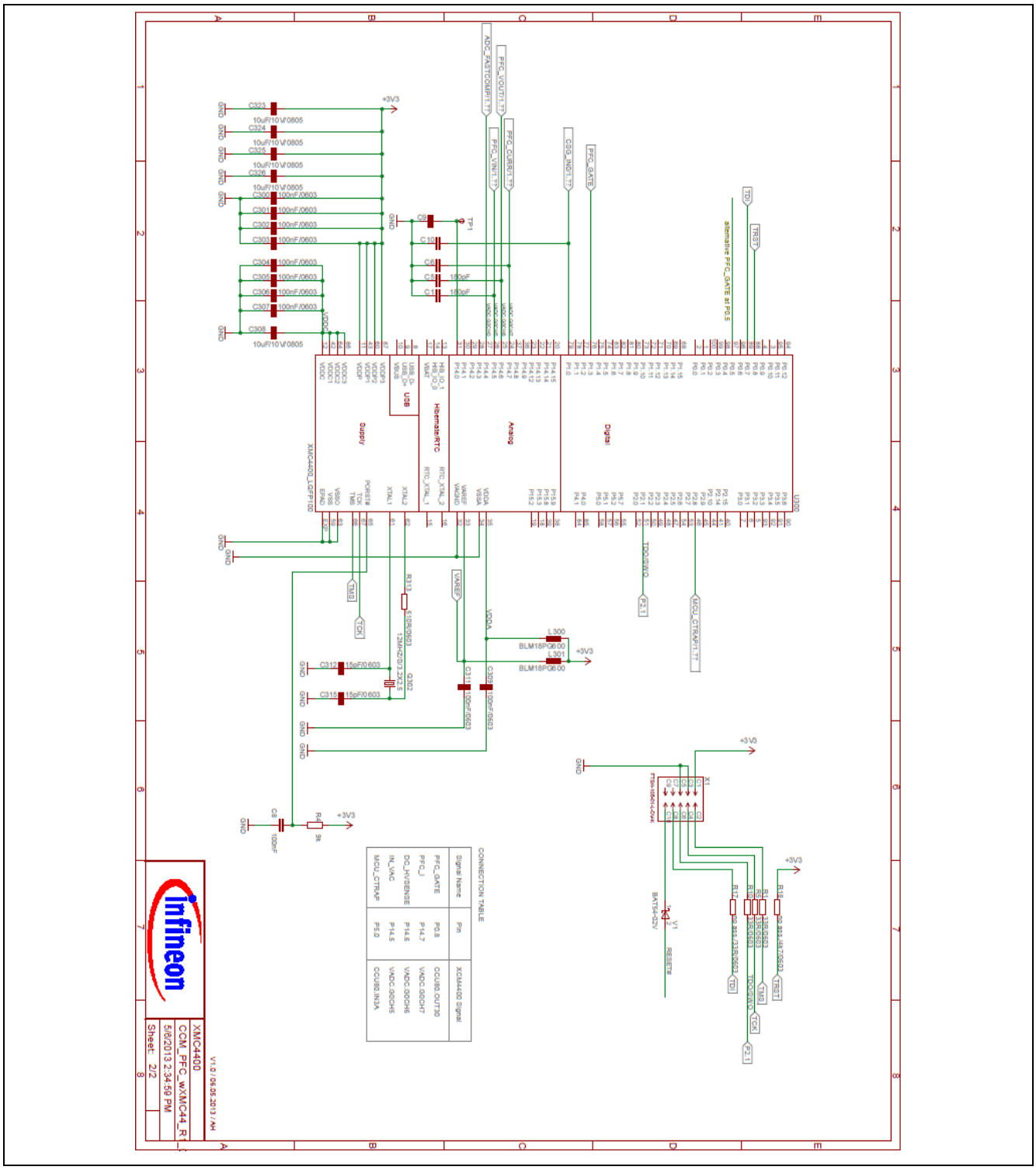

Figure 16 XMC4400 Circuitry

7.2 Flowcharts

7.2.1 One Match Interrupt

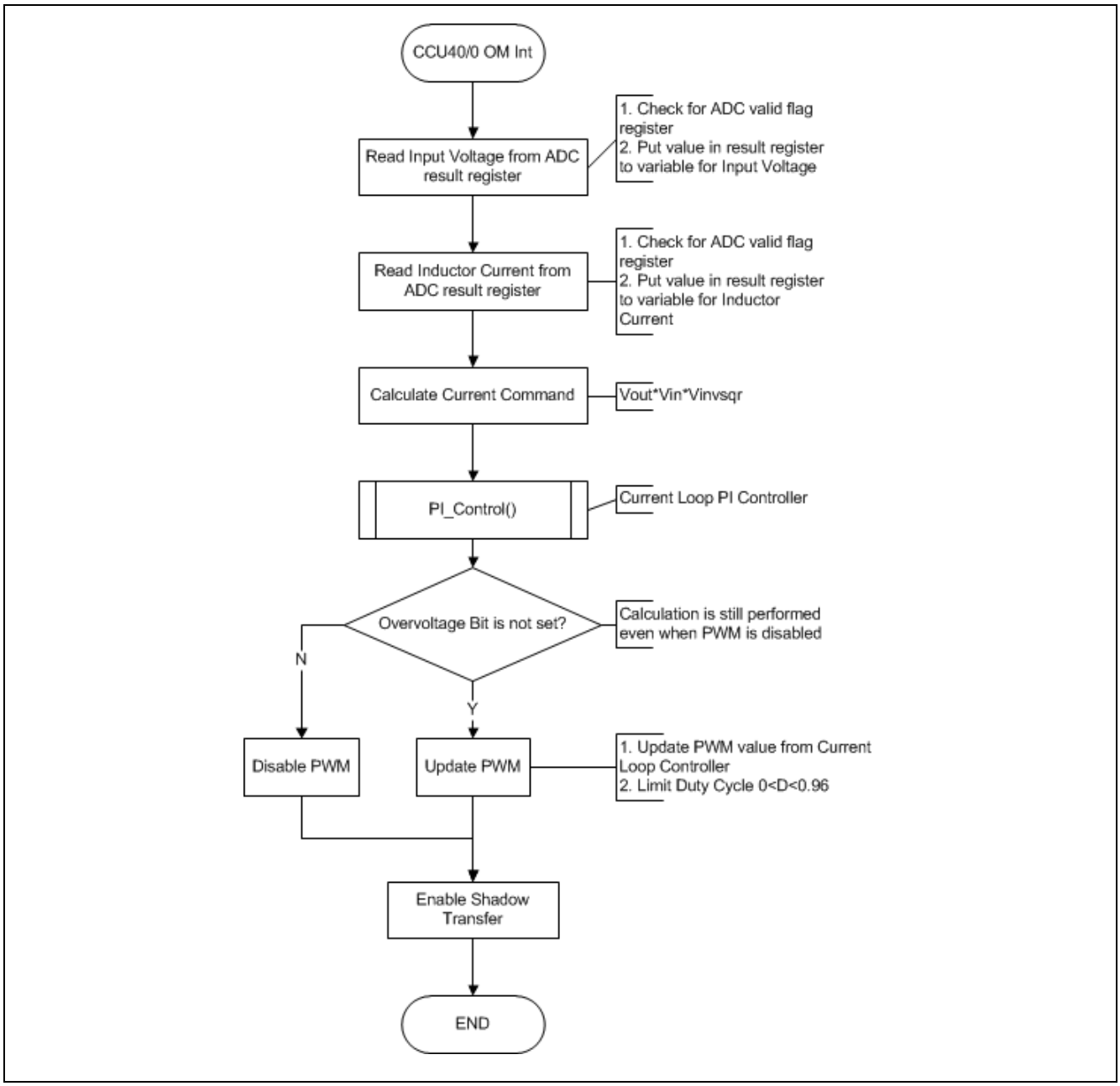

Figure 17 One Match Interrupt Flowchart

7.2.2 Compare Match Interrupt

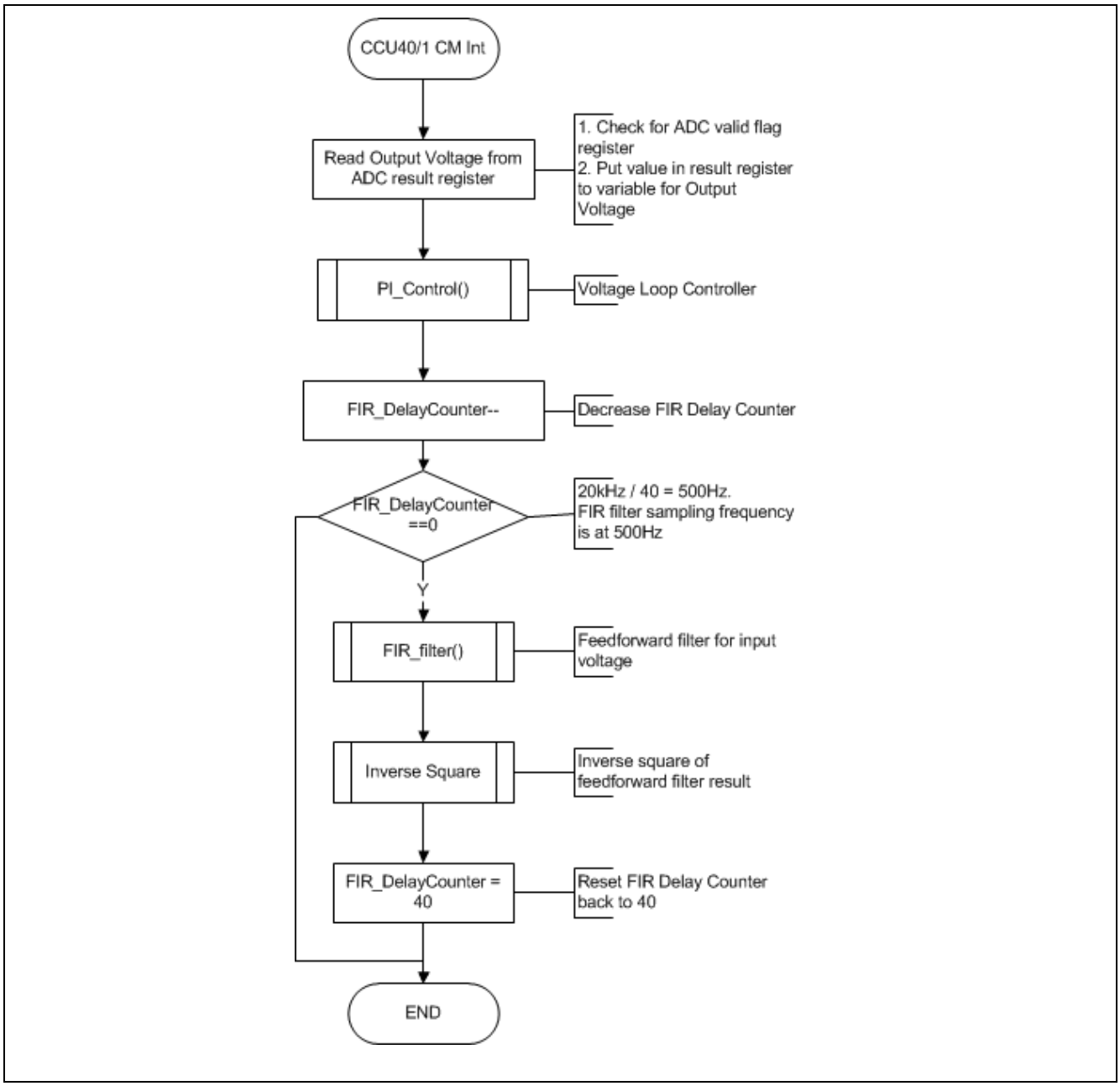

Figure 18 Compare Match Interrupt Flowchart

7.2.3 Over-voltage Interrupt

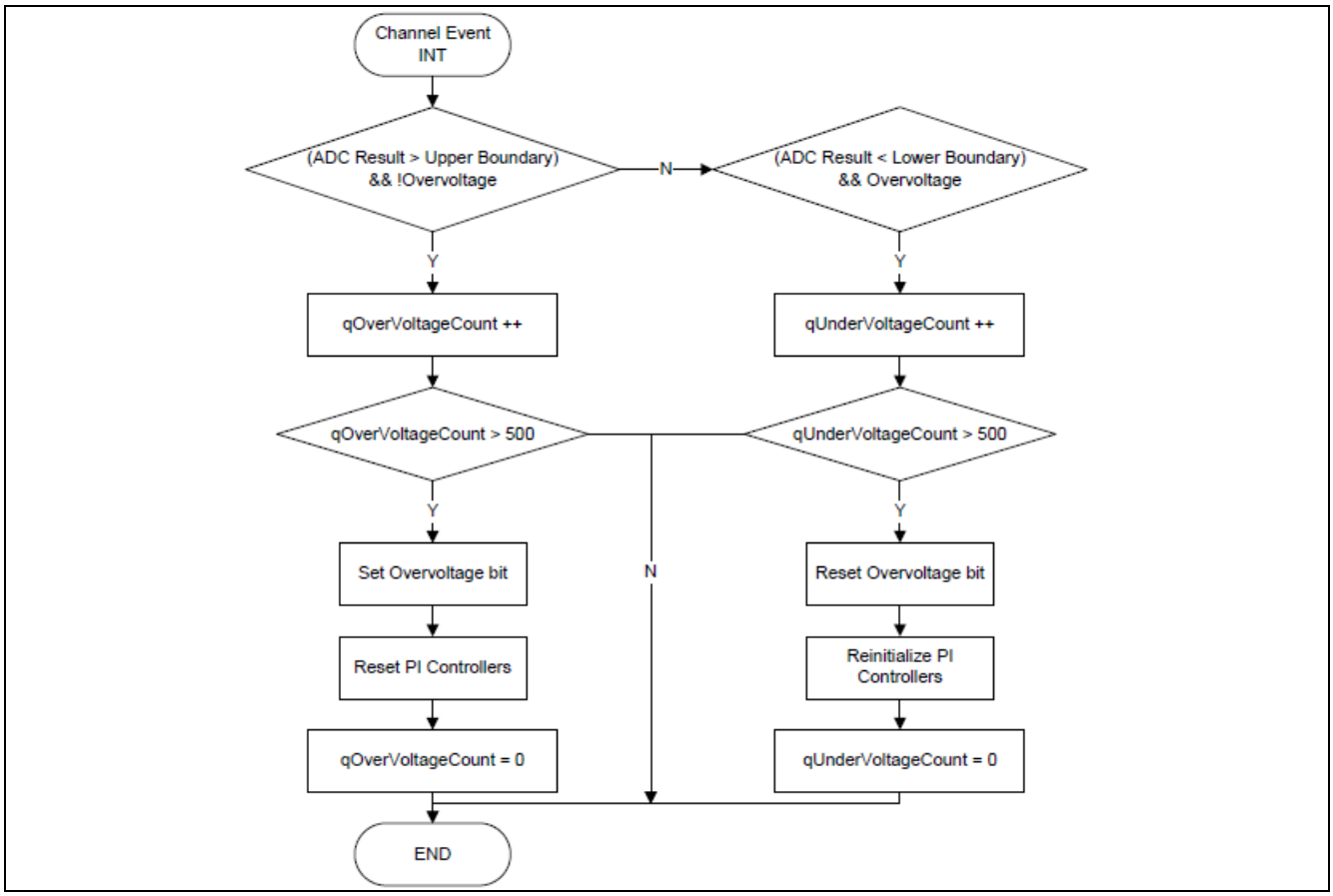

Figure 19 Over-voltage Interrupt Flowchart

w w w . i n f i n e o n . c o m

Published by Infineon Technologies AG