XMC1000 Kit
Standard Human Machine Interface Card

HMI OLED AUDIO

[1] Contents
[2] Touch Buttons, OLED, Boost Converter, Audio, Infrared Receiver

Fiducials

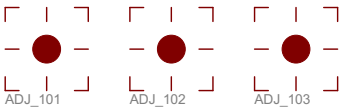

Legal Disclaimer

The information given in this document shall in no event be regarded as a guarantee of conditions or characteristics. With respect to any examples or hints given herein, any typical values stated herein and/or any information regarding the application of the device, Infineon Technologies hereby disclaims any and all warranties and liabilities of any kind, including without limitation, warranties of non-infringement of intellectual property rights of any third party.

2012/40
HMI_OLED_AUDIO_v3
7/11/2013 2:01:50 PM
Sheet: 1/2

HMI-BOARD CONNECTOR

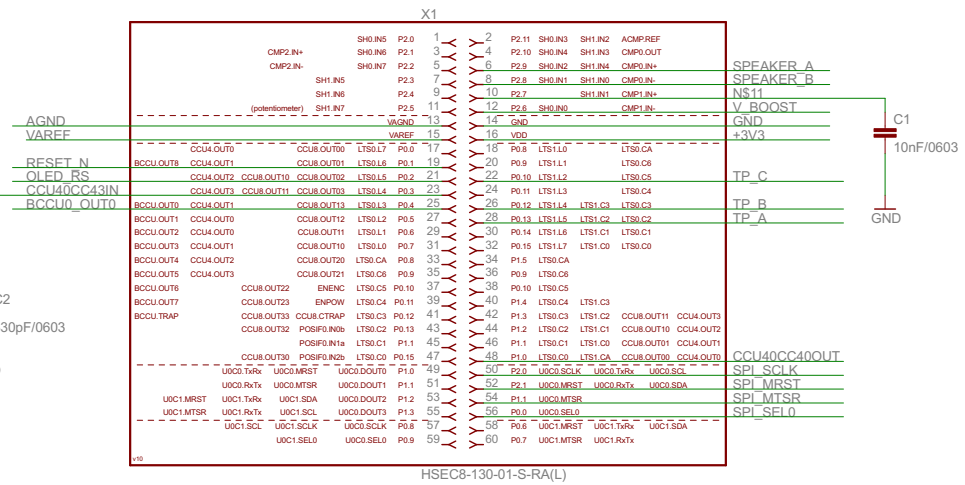

OLED CONNECTOR

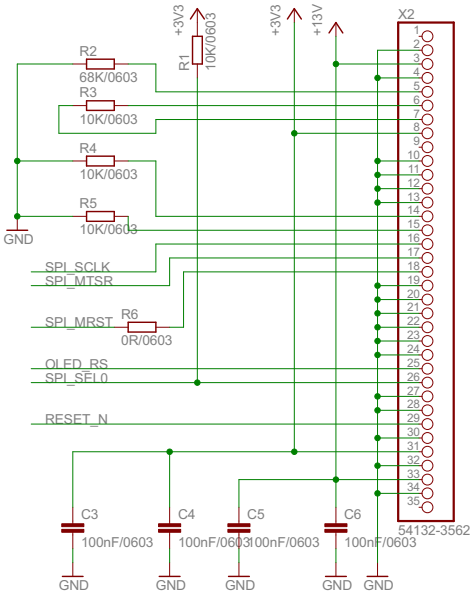

+3V3 POWER SUPPLY



CLASS D AMPLIFIER

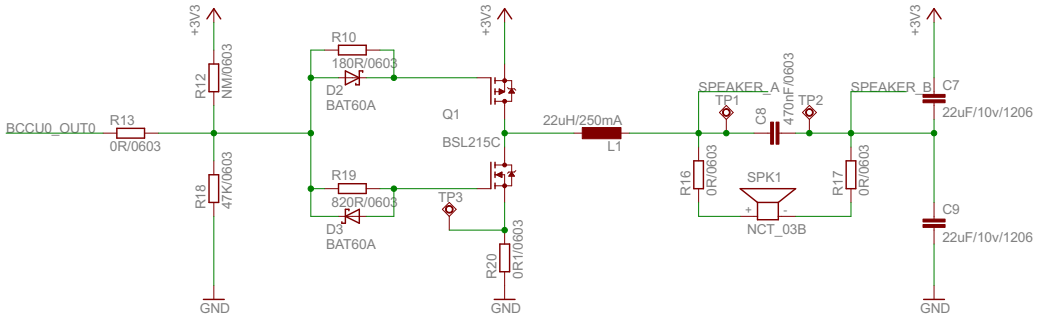

BOOST CONVERTER 13V

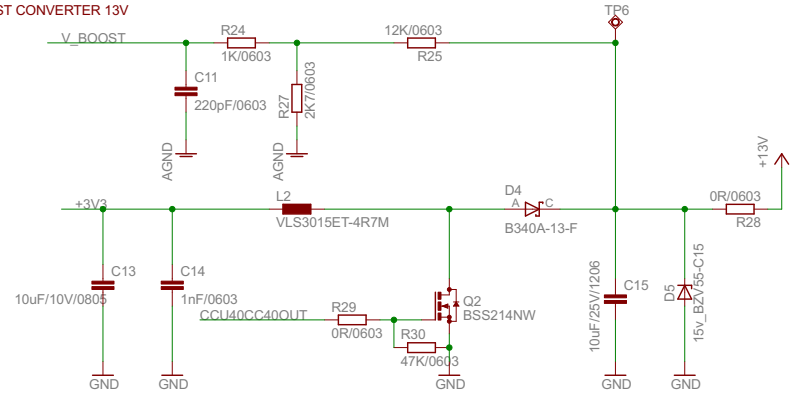

TOUCH BUTTONS

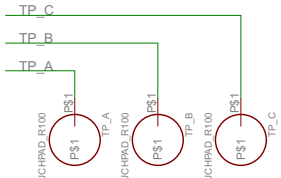

INFRA-RED RECEIVER

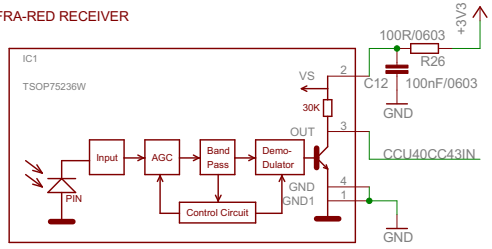

Legal Disclaimer

The information given in this document shall in no event be regarded as a guarantee of conditions or characteristics. With respect to any examples or hints given herein, any typical values stated herein and/or any information regarding the application of the device, Infineon Technologies hereby disclaims any and all warranties and liabilities of any kind, including without limitation, warranties of non-infringement of intellectual property rights of any third party.

	2012/40
	HMI_OLED_AUDIO_v3
	7/11/2013 2:01:50 PM
	Sheet: 2/2