XMC1000 Kit
5x7 LED Dot Matrix Display

inTouch 5x7 LED Matrix Display

[1] Contents
[2] 5x7 LED Matrix

Fiducials

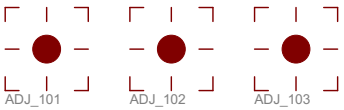

Legal Disclaimer

The information given in this document shall in no event be regarded as a guarantee of conditions or characteristics. With respect to any examples or hints given herein, any typical values stated herein and/or any information regarding the application of the device, Infineon Technologies hereby disclaims any and all warranties and liabilities of any kind, including without limitation, warranties of non-infringement of intellectual property rights of any third party.

2012/16
inTouch_LED5x7
25/4/2012 4:56:44 PM
Sheet: 1/2

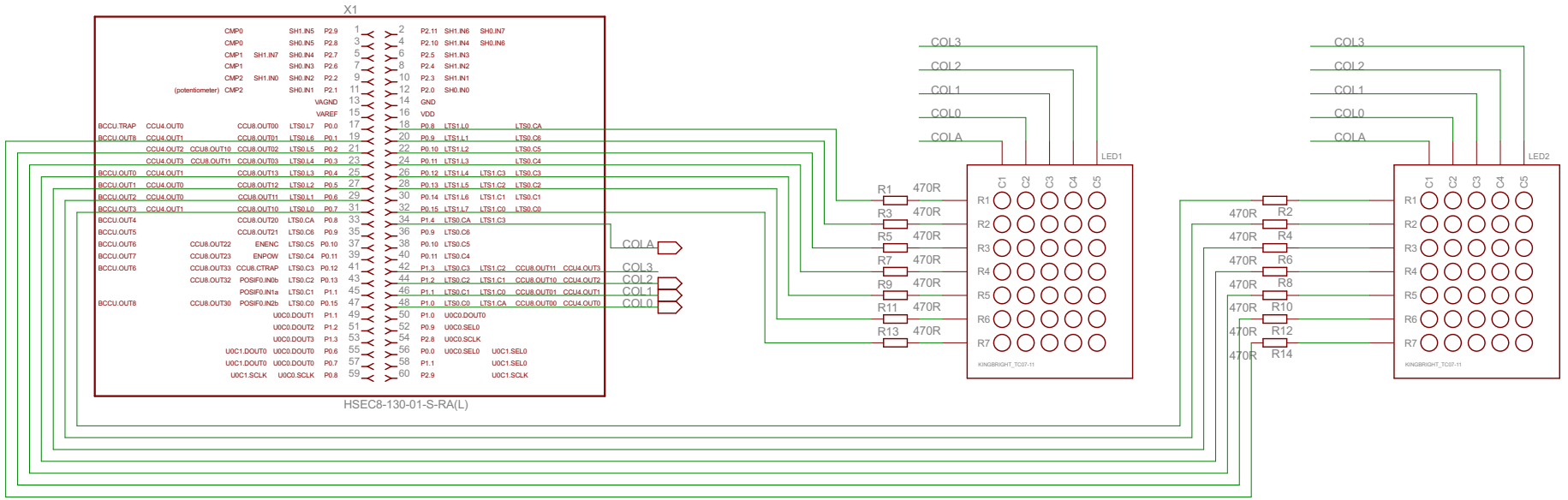

Legal Disclaimer

The information given in this document shall in no event be regarded as a guarantee of conditions or characteristics. With respect to any examples or hints given herein, any typical values stated herein and/or any information regarding the application of the device, Infineon Technologies hereby disclaims any and all warranties and liabilities of any kind, including without limitation, warranties of non-infringement of intellectual property rights of any third party.

2012/16	
inTouch_LED5x7	
25/4/2012 4:56:44 PM	
Sheet: 2/2	