CE95333 – PSoC® 4 Low-Power Comparator

Objective

This code example demonstrates the use of a low power comparator in PSoC 4 devices

Overview

This code example shows how Low-Power Comparator (LPComp) is calibrated and how the Component generates an interrupt signal. This example also shows how the LPComp Component can be operated in low-power modes.

Requirements

Tool: PSoC Creator 4.0 or higher

Programming Language: C (ARM® GCC 4.9.3)

Associated Parts: PSoC 4 family

Hardware: CY8CKIT-040, CY8CKIT-041, CY8CKIT-042, CY8CKIT-042-BLE, CY8CKIT-044, CY8CKIT-046, CY8CKIT-048

Design

The example uses a Low-Power Comparator to compare the voltage value of the two input voltages (Vplus and Vminus). A power supply is connected to Vplus and Vminus is set to half of V_{DD}. A Global Signal Reference (GSR) Component is used to access the interrupt signal of LPComp. The interrupt handler will turn ON the LED when the Vplus voltage is greater than the Vminus voltage and turn OFF when Vplus voltage is smaller than the Vminus voltage.

Figure 1. Top Design Schematic

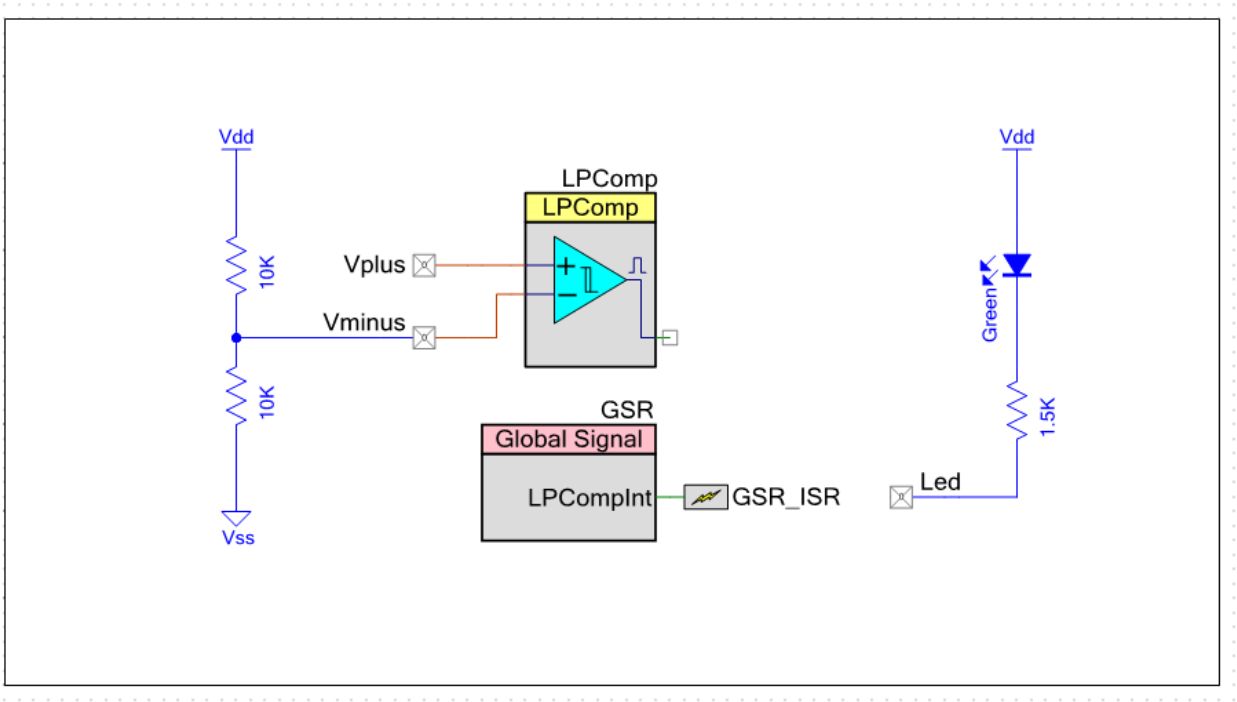

Kit Configuration and Pin Assignment

1. Select the appropriate device in the project's design-wide resource file (.cydwr file) according to Table 1.

Table 1. Development Kits versus Devices

Development Kit	Device
CY8CKIT-042	CY8C4245AXI-483
CY8CKIT-042-BLE	CY8C4247LQI-BL483
CY8CKIT-044	CY8C4247AZI-M485
CY8CKIT-046	CY8C4248BZI-L489
CY8CKIT-041	CY8C4146AZI-S433
CY8CKIT-048	CY8C4A45LQI-483

2. The project is designed for CY8CKIT-042 and therefore, the pin assignments are made accordingly. Edit the project's design-wide resource file (.cydwr file) to modify the physical pins for LPComp according to Table 2.

Table 2. Pin Assignment for Different Kits

Pin Name	Development Kit					
	CY8CKIT-041	CY8CKIT-042	CY8CKIT-042-BLE	CY8CKIT-044	CY8CKIT-046	CY8CKIT-048
Vplus	P0[2]	P0[0]	P1[0]	P1[0]	P1[0]	P1[0]
Vminus	P0[3]	P0[1]	P1[1]	P1[1]	P1[1]	P1[1]
LED	P2[2]	P0[2]	P3[6]	P2[6]	P5[3]	P2[6]

3. Connect all the external 10-kΩ resistors as shown in the top design schematic.

Components

Table 3 lists the PSoC Creator Components used in this example, as well as the hardware resources used by each.

Table 3. List of PSoC Creator Components

Component	Version	Hardware Resources
LPComp	2.2	LPComp
GSR	2.0	GSR
GSR_ISR	1.7	Interrupt
Pin	2.2	GPIO

The LPComp Component is configured to operate in slow speed and low-power mode. It also generates interrupt signals at both edges. The device will operate in the deep sleep mode and will only wake up when an interrupt occurs (whenever there is a change in the comparator output).

Figure 2. LPComp Configuration

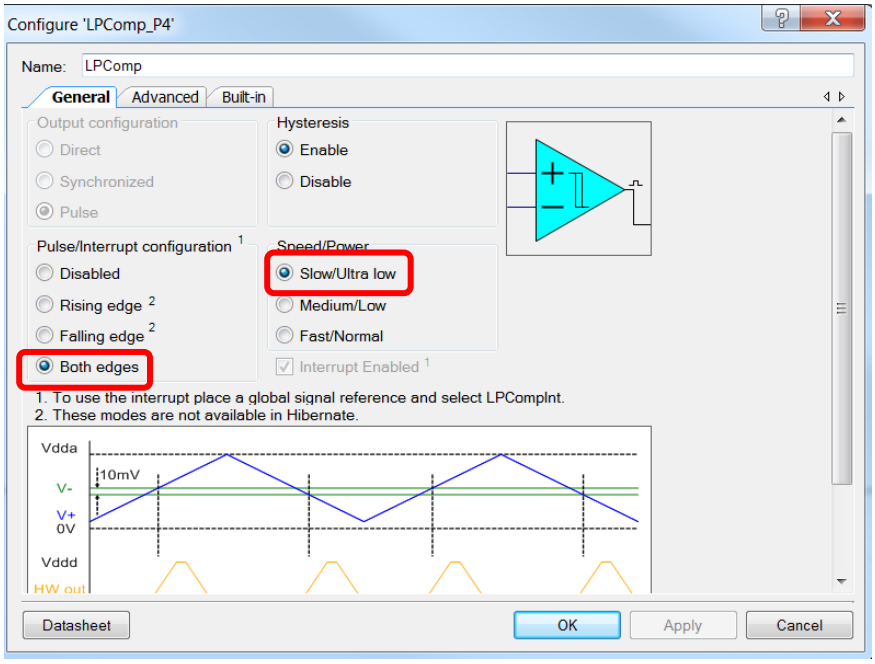

The GSR is configured to trigger when the low-power comparator generates an interrupt. A GSR Component is used to get the interrupt signal of LPComp because the LPComp Component doesn't have an interrupt output.

Figure 3. GSR Configuration

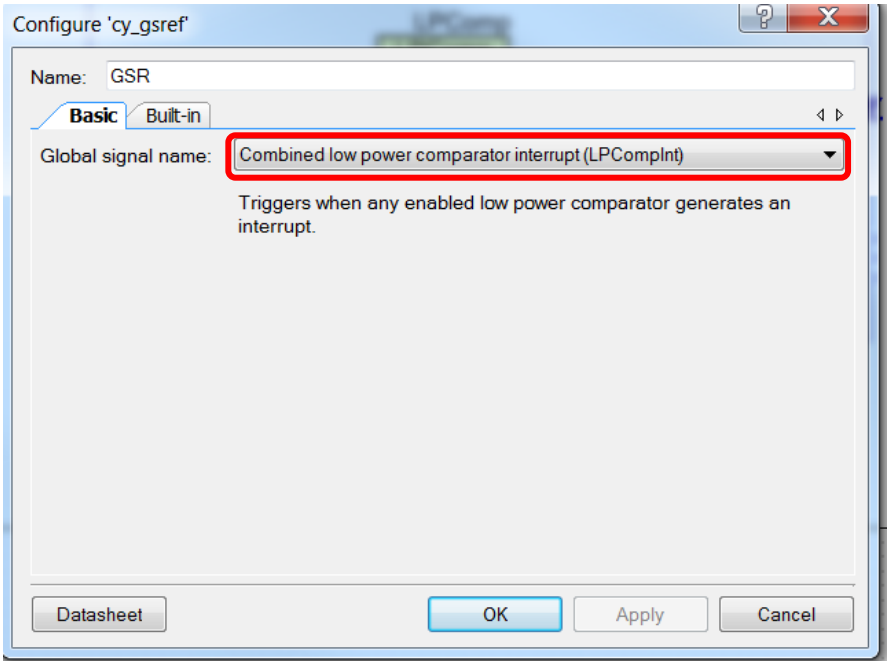

Operation

This example project needs a power source connected to the Vplus pin. Follow these steps to communicate with a PC host.

1. Make sure that the kit has been configured as instructed in the Kit Configuration and Pin Assignment section.
2. Connect the USB cable between the PC and PSoC 4 Pioneer Kit.
3. Connect the variable voltage source (e.g. 0.5 V) to the Vplus pin.
4. Observe that the LED turns ON when the voltage at Vplus is greater than half of V_{DD} (Vminus pin).

Related Documents

Table 4 lists all relevant application notes, code examples, device datasheets, and Component datasheets.

Table 4. Related Documents

Application Notes		
AN79953	Getting Started with PSoC 4	Describes PSoC 4, and shows how to build the attached code example.
Code Examples		
CE95340	PSoC® 4: Amplifier with Dynamic Gain Switching with PSoC 4	This code example demonstrates how to multiplex three different channels with ADC using Analog Mux and send results to HyperTerminal (PC) using UART.
CE95293	Analog Voltage Comparator with PSoC 4	This code example demonstrates the PSoC 4 Comparator in Non-Inverting mode.
CE95338	Multiplexed Analog Comparator with PSoC 4	This code example demonstrates how to monitor multiple input signals using multiplexed analog comparator without any CPU intervention.
CE95360	Scanning Comparator using common mode with PSoC 3/4/5LP	This data sheet code example demonstrates operation of the Scanning Comparator (Common Mode) component with the PSoC Creator Software.
PSoC Creator Component Datasheets		
Low Power Comparator	The Low Power Comparator (LPComp) component provides access to the low power comparators implemented using the fixed function LP comparator block that is present in PSoC 4.	
Global Signal Reference	It allows access to device specific, device level global signals.	
Interrupt	The Interrupt component defines hardware triggered interrupts.	
Pins	Supports connection of hardware resources to physical pins	
Device Documentation		
PSoC 4 Datasheets	PSoC 4 Technical Reference Manuals	
Development Kit (DVK) Documentation		
PSoC 4 Kits		

Document History

Document Title: CE95333 - PSoC® 4 Low-Power Comparator

Document Number: 001-95333

Revision	ECN	Orig. of Change	Submission Date	Description of Change
**	5530731	WESL	11/23/2016	New code example

Worldwide Sales and Design Support

Cypress maintains a worldwide network of offices, solution centers, manufacturer's representatives, and distributors. To find the office closest to you, visit us at Cypress Locations.

Products

ARM® Cortex® Microcontrollers	cypress.com/arm
Automotive	cypress.com/automotive
Clocks & Buffers	cypress.com/clocks
Interface	cypress.com/interface
Internet of Things	cypress.com/iot
Lighting & Power Control	cypress.com/powerpsoc
Memory	cypress.com/memory
PSoC	cypress.com/psoc
Touch Sensing	cypress.com/touch
USB Controllers	cypress.com/usb
Wireless/RF	cypress.com/wireless

PSoC® Solutions

PSoC 1 | PSoC 3 | PSoC 4 | PSoC 5LP

Cypress Developer Community

Forums | Projects | Videos | Blogs | Training | Components

Technical Support

cypress.com/support

PSoC is a registered trademark and PSoC Creator is a trademark of Cypress Semiconductor Corporation. All other trademarks or registered trademarks referenced herein are the property of their respective owners.

Cypress Semiconductor
198 Champion Court
San Jose, CA 95134-1709

Phone : 408-943-2600
Fax : 408-943-4730
Website : www.cypress.com

© Cypress Semiconductor Corporation, 2016. This document is the property of Cypress Semiconductor Corporation and its subsidiaries, including Spansion LLC ("Cypress"). This document, including any software or firmware included or referenced in this document ("Software"), is owned by Cypress under the intellectual property laws and treaties of the United States and other countries worldwide. Cypress reserves all rights under such laws and treaties and does not, except as specifically stated in this paragraph, grant any license under its patents, copyrights, trademarks, or other intellectual property rights. If the Software is not accompanied by a license agreement and you do not otherwise have a written agreement with Cypress governing the use of the Software, then Cypress hereby grants you a personal, non-exclusive, nontransferable license (without the right to sublicense) (1) under its copyright rights in the Software (a) for Software provided in source code form, to modify and reproduce the Software solely for use with Cypress hardware products, only internally within your organization, and (b) to distribute the Software in binary code form externally to end users (either directly or indirectly through resellers and distributors), solely for use on Cypress hardware product units, and (2) under those claims of Cypress's patents that are infringed by the Software (as provided by Cypress, unmodified) to make, use, distribute, and import the Software solely for use with Cypress hardware products. Any other use, reproduction, modification, translation, or compilation of the Software is prohibited.

TO THE EXTENT PERMITTED BY APPLICABLE LAW, CYPRESS MAKES NO WARRANTY OF ANY KIND, EXPRESS OR IMPLIED, WITH REGARD TO THIS DOCUMENT OR ANY SOFTWARE OR ACCOMPANYING HARDWARE, INCLUDING, BUT NOT LIMITED TO, THE IMPLIED WARRANTIES OF MERCHANTABILITY AND FITNESS FOR A PARTICULAR PURPOSE. To the extent permitted by applicable law, Cypress reserves the right to make changes to this document without further notice. Cypress does not assume any liability arising out of the application or use of any product or circuit described in this document. Any information provided in this document, including any sample design information or programming code, is provided only for reference purposes. It is the responsibility of the user of this document to properly design, program, and test the functionality and safety of any application made of this information and any resulting product. Cypress products are not designed, intended, or authorized for use as critical components in systems designed or intended for the operation of weapons, weapons systems, nuclear installations, life-support devices or systems, other medical devices or systems (including resuscitation equipment and surgical implants), pollution control or hazardous substances management, or other uses where the failure of the device or system could cause personal injury, death, or property damage ("Unintended Uses"). A critical component is any component of a device or system whose failure to perform can be reasonably expected to cause the failure of the device or system, or to affect its safety or effectiveness. Cypress is not liable, in whole or in part, and you shall and hereby do release Cypress from any claim, damage, or other liability arising from or related to all Unintended Uses of Cypress products. You shall indemnify and hold Cypress harmless from and against all claims, costs, damages, and other liabilities, including claims for personal injury or death, arising from or related to any Unintended Uses of Cypress products.

Cypress, the Cypress logo, Spansion, the Spansion logo, and combinations thereof, WICED, PSoC, CapSense, EZ-USB, F-RAM, and Traveo are trademarks or registered trademarks of Cypress in the United States and other countries. For a more complete list of Cypress trademarks, visit cypress.com. Other names and brands may be claimed as property of their respective owners.