Please note that Cypress is an Infineon Technologies Company.
The document following this cover page is marked as “Cypress” document as this is the company that originally developed the product. Please note that Infineon will continue to offer the product to new and existing customers as part of the Infineon product portfolio.

Continuity of document content
The fact that Infineon offers the following product as part of the Infineon product portfolio does not lead to any changes to this document. Future revisions will occur when appropriate, and any changes will be set out on the document history page.

Continuity of ordering part numbers
Infineon continues to support existing part numbers. Please continue to use the ordering part numbers listed in the datasheet for ordering.

CE224073 – SPI F-RAM Access Using PSoC 6 MCU SMIF in Memory Mapped (XIP) Mode

Objective

This code examples demonstrates how to access the SPI F-RAM™ using the PSoC® 6 MCU's Serial Memory Interface (SMIF) in command or memory mapped IO (MMIO) mode as well as in memory mapped (or XIP, eXecute-In-Place) mode.

Overview

This code example implements the SPI host controller on PSoC 6 MCU using the SMIF Component and demonstrates accessing the SPI F-RAM writes and reads using the memory mapped IO (MMIO) mode and memory mapped (or XIP, eXecute-In-Place) mode of the SMIF component. The code example results can be monitored through an UART terminal on the PC. This code example also demonstrates switching between the XIP to MMIO mode and vice versa to execute various memory and non-memory accesses of the SPI F-RAM device. Since F-RAM is a nonvolatile memory with SRAM like accesses (symmetrical write and read at bus speed), depending on the application use case, PSoC 6 firmware can enable F-RAM access either in MMIO or the XIP mode. The MMIO mode only access is discussed in detail in *CE222460 - SPI F-RAM Access Using PSoC 6 MCU SMIF*.

MMIO vs Memory Mapped (XIP)

In the command or MMIO mode, the SMIF access is supported through software writes to transmit (Tx) FIFO and software reads from receive (Rx) FIFO. The FIFOs are mapped on SMIF registers. This interface provides flexibility to implement all types of access to the external memory device. For example, memory, registers, and low power modes accesses can be executed in the MMIO mode. This mode is suitable for data logging applications with memory write/read in burst mode (access more than one byte) as well as other non-memory accesses such as entering low power mode, read device ID, read serial number, and so on.

In the memory mapped or XIP mode, the external memory (SPI F-RAM in this code example) is directly mapped to the CPU's internal memory space. Hence, any write to the external memory or read from the external memory is like any register writes and reads in the program. Data transfers from the host controller to the external memory device are automatically translated to the memory device writes and reads by the SMIF hardware. However, other non-memory accesses such as entering low power mode, read device ID, read serial number, and so on can't be executed in XIP mode. Hence, the PSoC 6 host must switch to MMIO mode in between XIP mode memory writes and reads to execute non-memory accesses. The memory mapped or XIP mode provides an efficient method for random memory writes and reads. Hence, the XIP mode is suitable for code execution, scratchpad buffer, and DMA transfer use cases.

Requirements

Tool: PSoC Creator™ 4.2; Peripheral Driver Library (PDL) 3.1.0

Programming Language: C (Arm® GCC 5.4-2016-q2-update, Arm MDK Generic)

Associated Parts: All PSoC 6 MCU parts

Related Hardware: PSoC 6 WiFi-BT Pioneer Kit (CY8CKIT-062-WiFi-BT)

Hardware Setup

The hardware setup includes connecting the SPI F-RAM with PSoC 6 MCU as shown in Figure 1. You can use either dedicated hardware as described in the Requirements section or connect via jumper wires by tapping the SMIF SPI control pins and connect to the SPI pins of an external SPI F-RAM. This example uses the PSoC 6 WiFi-BT Pioneer kit's default configuration. See the kit guide to make sure the kit is configured correctly.

Figure 1. Hardware Setup Block Diagram

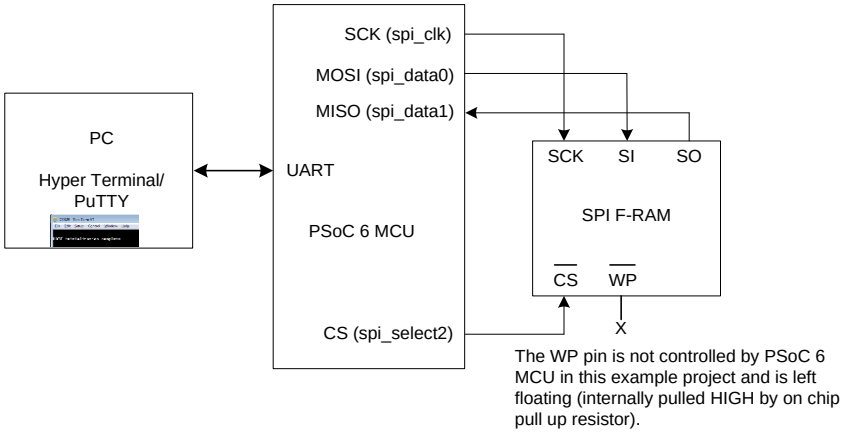

Software Setup

This section demonstrates the procedure to setup the serial (UART) connection using PuTTY on a PC to communicate with the PSoC 6 Pioneer Kit. PuTTY is a free SSH and telnet client for Windows. You can download PuTTY from www.putty.org. Follow these instructions to determine the COM port number and setup the PuTTY to monitor the code example outputs on PC.

1. Connect the PSoC 6 Pioneer Kit to the PC using an USB cable. The kit enumerates as KitProg2 USB-UART and is available under the **Device Manager** > **Ports (COM & LPT)**. A communication port (COMx) is assigned to KitProg2 USB-UART; for example, COM22 is assigned to PSoC 6 Pioneer Kit on the sample setup, as shown in Figure 2.

Figure 2. KitProg2 USB-UART in Device Manager

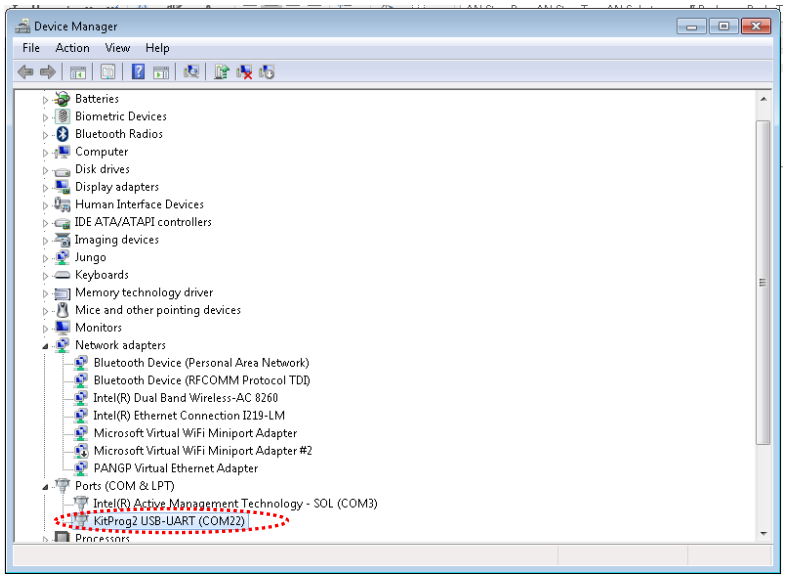

2. After you download and install PuTTY, double-click the PuTTY icon and select **Serial** under **Connection**.
3. A new window opens, as shown in Figure 3, where you can select the communication port. Do the following in the **Options controlling local serial lines** section:
    - In the **Serial line to connect to** field, enter the PSoC 6 Port (COM & LPT), COMx, in. This code example uses **COM22**. Verify the COM setting for your setup and select the appropriate COMx.

- Enter the **Speed (baud)**, **Data bits**, and **Stop bits**.
- Select the **Parity** and **Flow control**.

Figure 3. Open New Connection

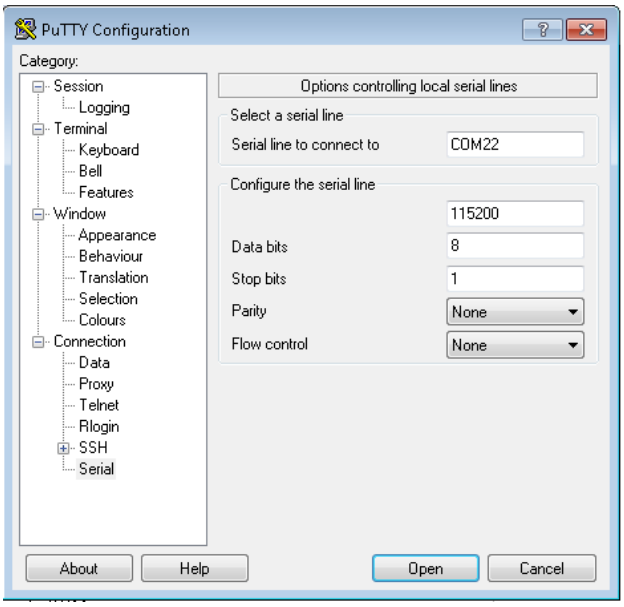

4. From the Category panel, select **Session**. Select **Serial** as the **Connection type** as shown in Figure 4. You can save this current session and load the settings when required. Enter a name in **Saved Sessions** and click **Save**. Click **Open** to proceed.

Figure 4. Select Communication Type in PuTTY

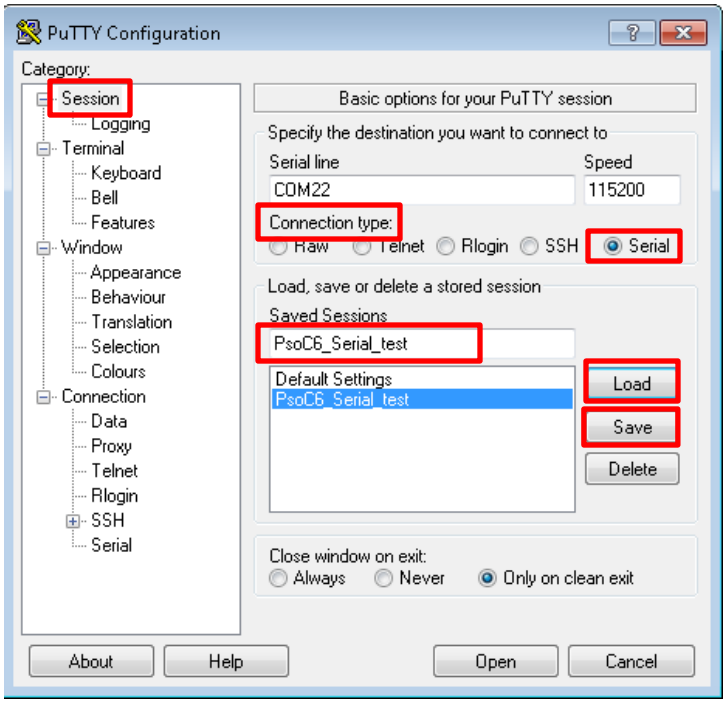

5. The COM terminal window then displays the code example results as shown in Figure 5 after building and programming the code example project, as described in the Operation section. You may have to reprogram PSoC 6 MCU with the code example hex file or reset the PSoC 6 MCU (already programmed) to restart the code execution and monitor the result.

Figure 5. Result Displayed on PuTTY

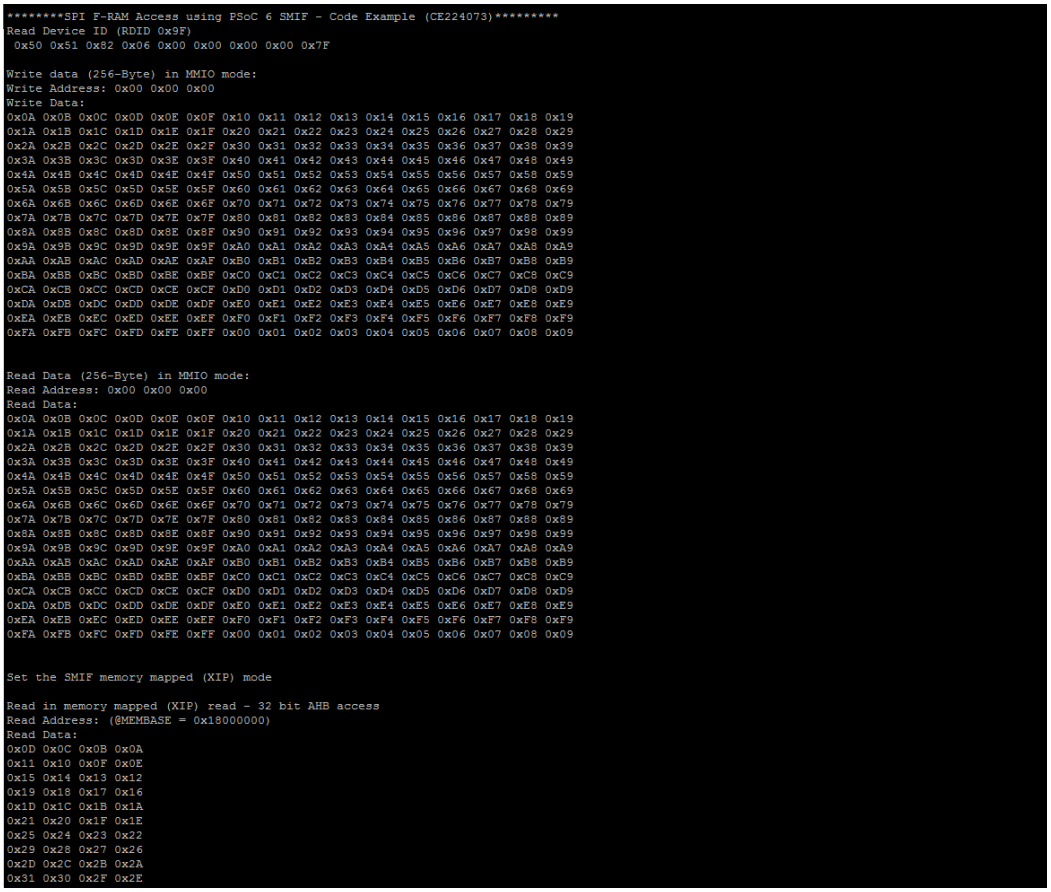

Alternatively, you can run the HyperTerminal, if supported on your PC, to monitor the result.

Operation

Do the following to execute the code example project. See the Design and Implementation section for more details.

1. Connect the CY8CKIT-062-WiFi-BT Pioneer Kit to a USB port on your PC. Set the V_{DD}; select either 1.8 V or 3.3 V using the switch SW5 on PSoC 6 Pioneer Kit. The SPI/QSPI F-RAM supports wide operating range V_{DD} = 1.8 V to 3.6 V.
2. Open a serial port communication program such as PuTTY and select the corresponding COM port. Configure the terminal to match the UART: 115200 baud rate, 8N1, and Flow control – None. See the Software Setup section for the PuTTY setup. These settings must match the configuration of the PSoC Creator UART Component in the project.
3. Build and program the application into the CY8CKIT-062-WiFi-BT Kit or CY8CKIT-062-BLE Kit, which has serial F-RAM mounted on it. Select the CM4 option for programming, as shown in Figure 6. For more information on building a project or programming a device, see *PSoC Creator Help*.

Figure 6. PSoC 6 Programming (CM4)

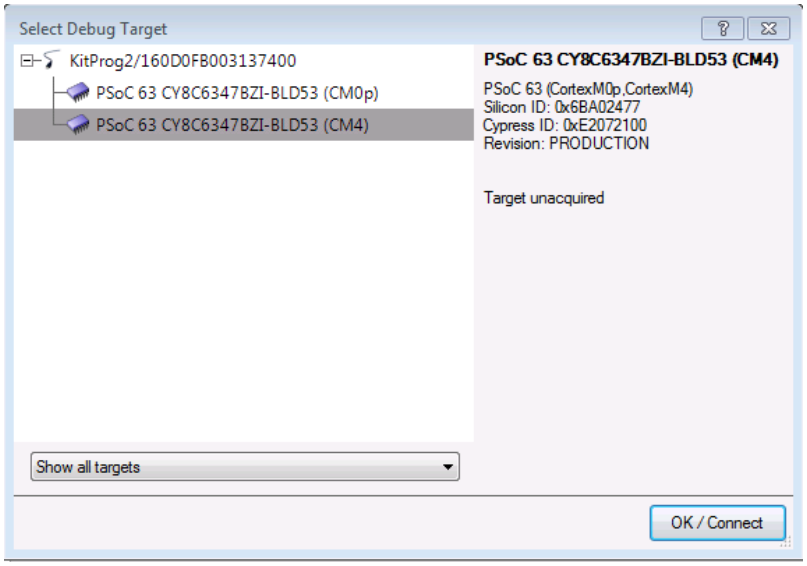

4. Observe the UART example header message printed in the terminal window. Figure 5 shows an example of the output.

Note: If you are using the ExcelonTM-Ultra (QSPI F-RAM) on the CY8CKIT-062-WiFi-BT kit to execute this code example, then make sure that the Excelon-Ultra device access mode is set to SPI and the memory and the register latencies are set to 0. See the code example *CE222967 - Excelon™-Ultra QSPI F-RAM Access Using PSoC 6 MCU SMIF* to change the access mode and the latency settings in the Excelon-Ultra device using PSoC 6 MCU.

Design and Implementation

Figure 7 shows the design for this code example. The SMIF Component implements a SPI-based communication for interfacing with an external SPI F-RAM with PSoC 6 as the host MCU. The SMIF Component is configured with two data lines (input SI, output SO), single slave select line, and the SPI clock (SCK) at 40 MHz. The UART Component outputs debug information to a terminal window. It is configured for 8N1, transmit only, at 115.2 kbps.

Figure 7. CE224073 Design Schematic in PSoC Creator

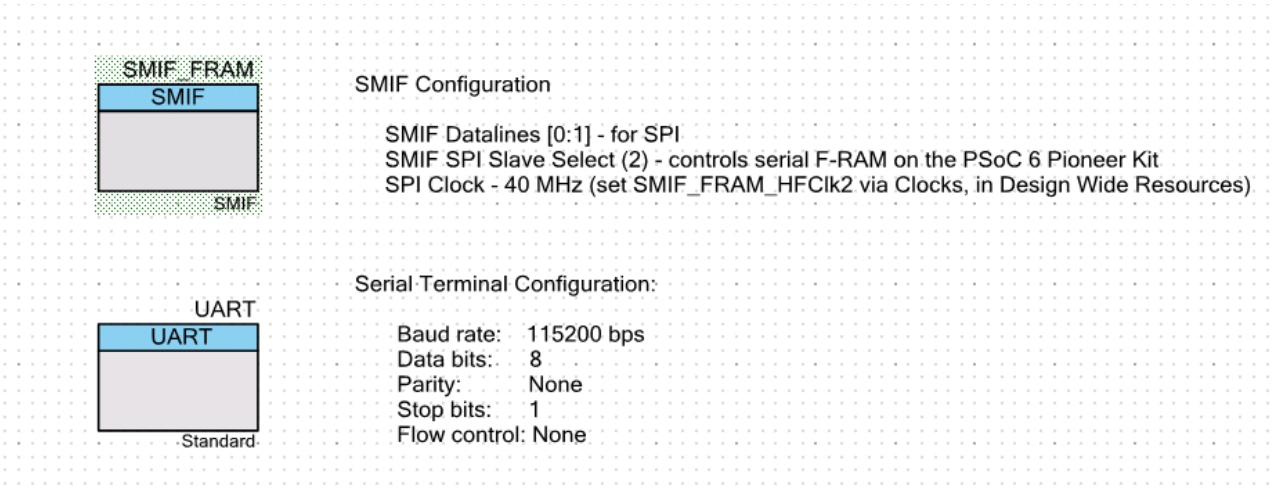

Cypress SPI F-RAMs support SPI clock frequency (SCK) up to 50 MHz. See the SPI F-RAM datasheet for more details on the access speed of the specific SPI F-RAM part used in your application.

Components and Settings

Table 1 lists all PSoC Creator Components used in the three examples.

Table 1. PSoC Creator Components

Component	Instance Name	Purpose
SMIF(SMIF_PDL)	SMIF_FRAM	The SMIF peripheral block. Configures the SPI host controller in the design
UART (SCB_UART_PDL)	UART	Handles communication with the terminal window

Parameter Settings

Figure 8 shows the parameter settings for the SMIF_FRAM Component and the UART (SCB). Non-default settings for each Component are outlined in red.

Figure 8. Parameters Setting for SMIF and UART Components (Non-default settings are highlighted)

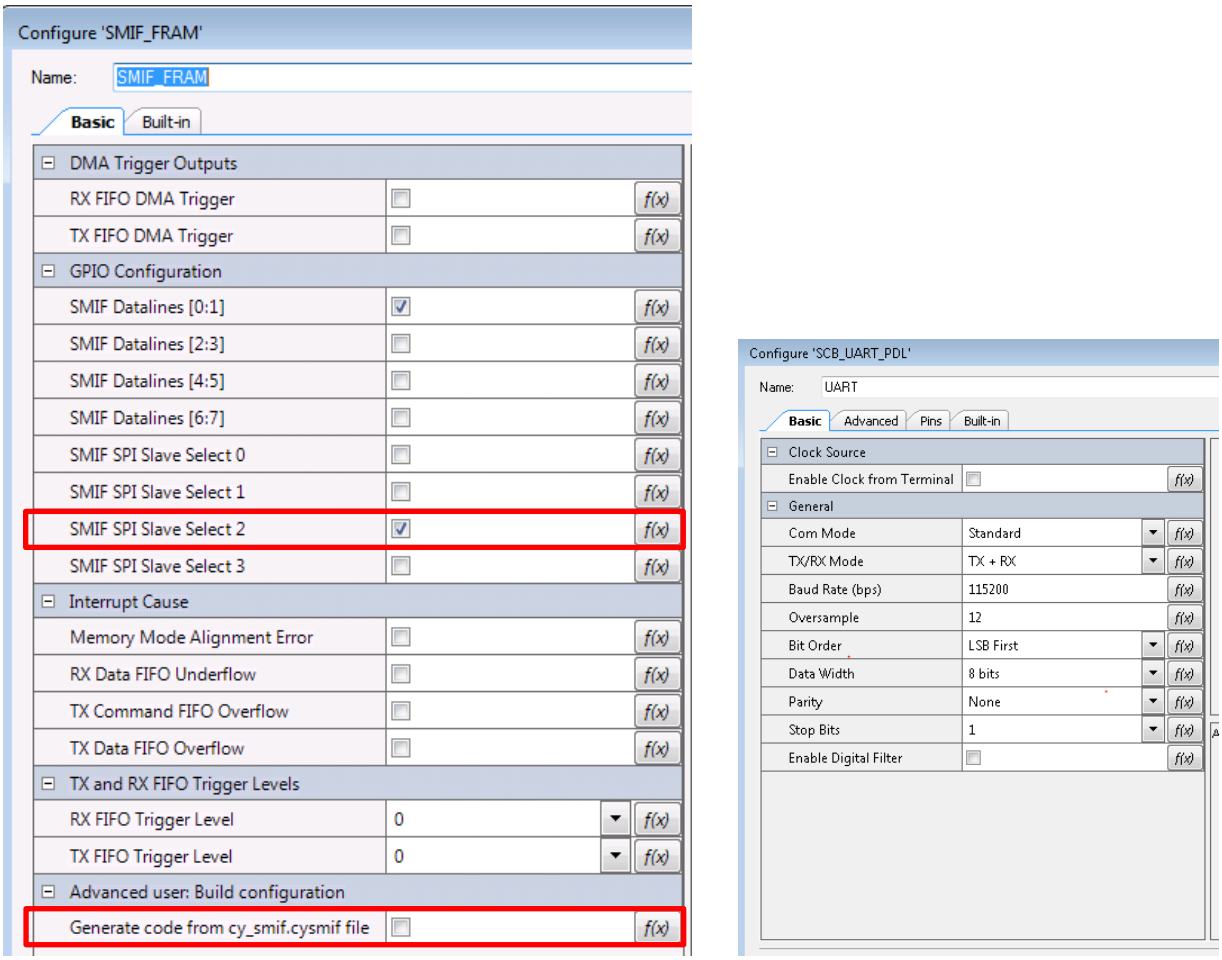

Design-Wide Resources

Make sure that V_{DDD} (**PSoC Creator** > **Design Wide Resources** > **System** tab) is set to 2.7 V or above, as shown in Figure 9, to drive the status LED (if any) used in the application. Also, make sure that PSoC 6 MCU I/O voltage is set correctly to match the SPI F-RAM operating range (V_{DD}/ V_{CC}).

Figure 9. V_{DD} Setting using Design Wide Resources

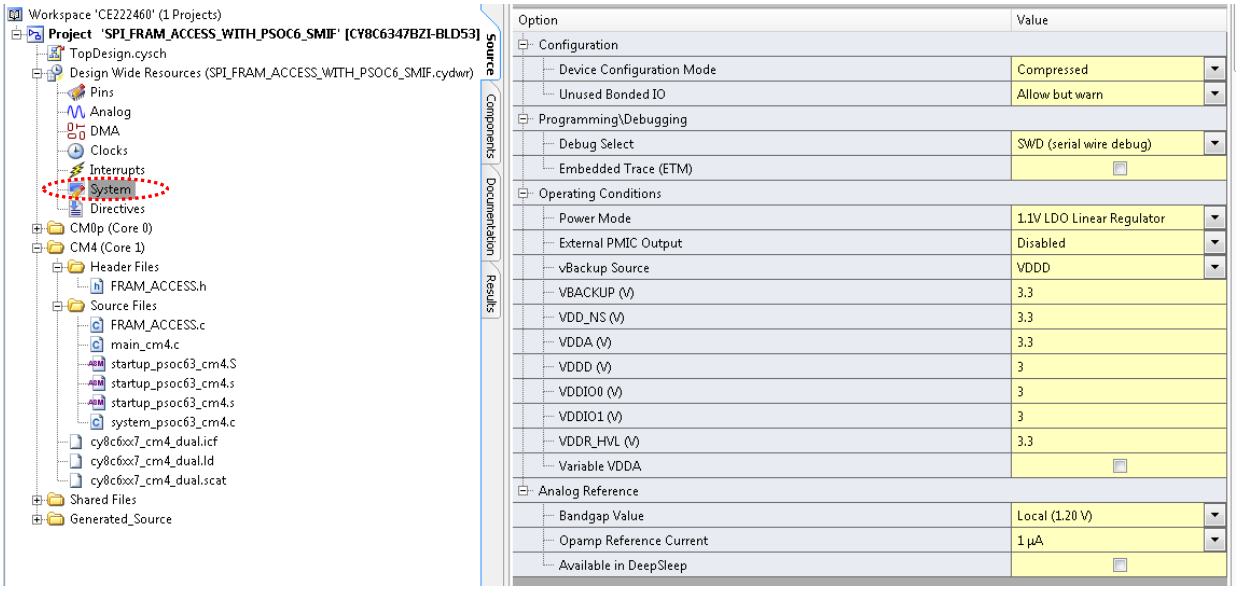

Make sure that SMIF SPI clock frequency is set at 50 MHz or below. To change the SMIF clock frequency, go to **PSoC Creator** > **Design Wide Resources** > **Clocks**, as shown in Figure 10, and double-click.

Figure 10. SMIF SPI Clock Setting using Design Wide Resources – Step 1

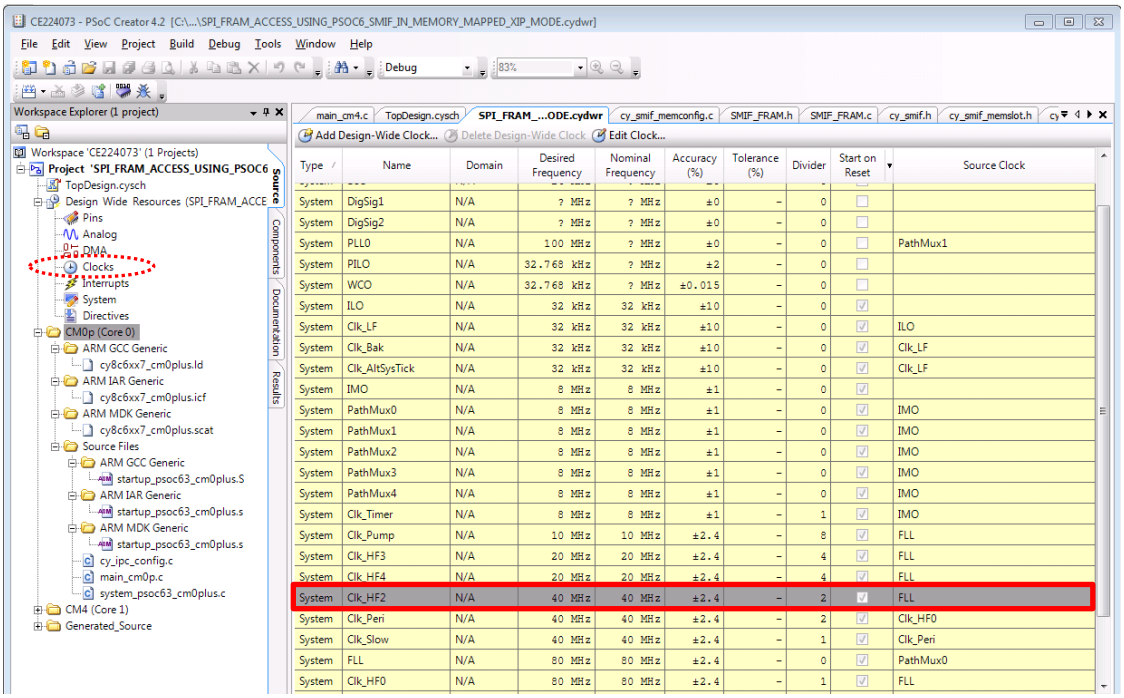

Double-click anywhere in the **Clk_HF2** row, as highlighted in Figure 10. A new Configure System Clocks window opens as shown in Figure 11.

Go to the **High Frequency Clocks** tab and select the appropriate clock path and the clock divider from corresponding drop-down lists to set the frequency to 50 MHz or below (see Figure 11). This code example sets the SPI clock frequency to 40 MHz. Select **OK**.

Figure 11. SMIF SPI Clock Setting using Design Wide Resources – Step 2

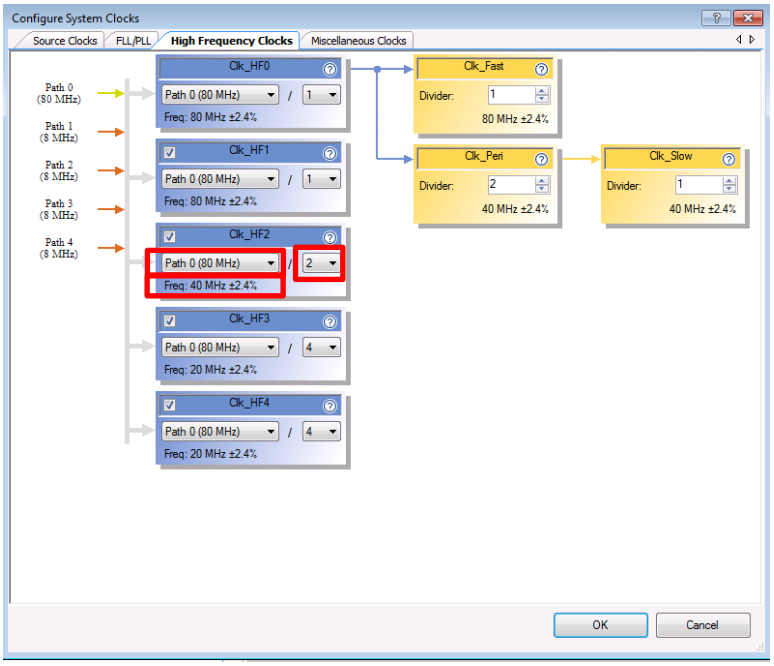

You can use FLL/PLL, as shown in Figure 12, to configure other frequency options for Path 0.

Figure 12. FLL/PLL Setting examples – Step 3

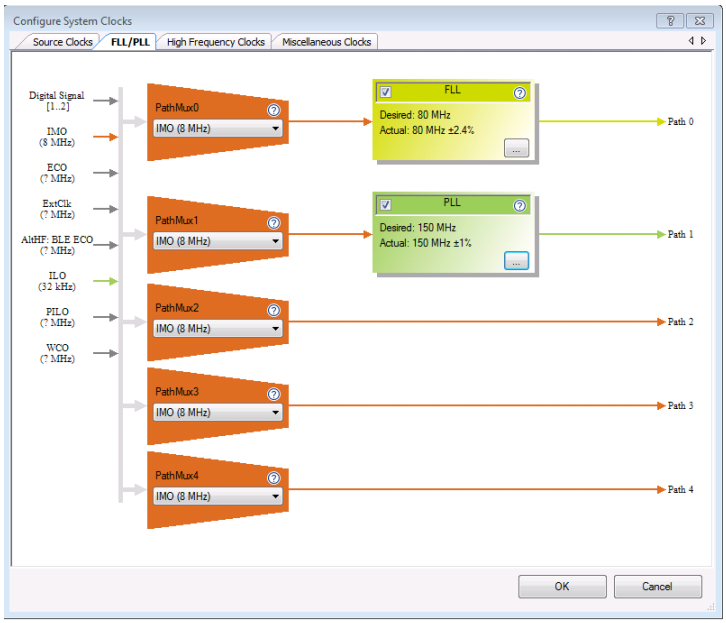

PSoC 6 Pin Assignment

Figure 13 shows the pin assignment for the code example. The following PSoC 6 pins control the respective SPI F-RAM control pins for the SPI communication.

Figure 13. PSoC 6 Pin Assignments for Code Example

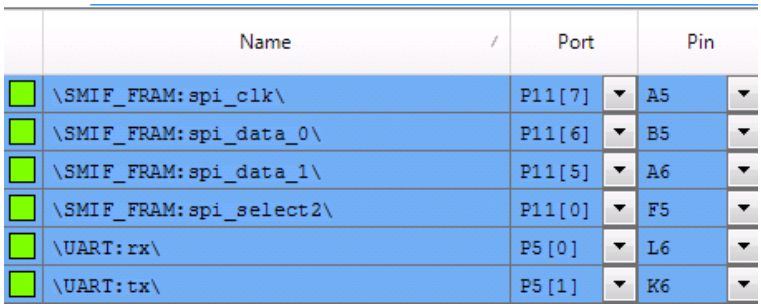

Name	Port	Pin
\SMIF_FRAM:spi_clk\	P11[7]	A5
\SMIF_FRAM:spi_data_0\	P11[6]	B5
\SMIF_FRAM:spi_data_1\	P11[5]	A6
\SMIF_FRAM:spi_select2\	P11[0]	F5
\UART:rx\	P5[0]	L6
\UART:tx\	P5[1]	K6

Reusing This Example

This example is designed for the CY8CKIT-062-WiFi-BT Pioneer Kit with serial F-RAM mounted. To port the design to a different PSoC 6 MCU device, kit, or both, change the target device using the Device Selector and update the pin assignments in Design Wide Resources Pins settings as needed. For single-core PSoC 6 MCU devices, port the code from *main_cm4.c* to *main.c*.

This code example also includes SPI F-RAM-specific PSoC 6 SMIF driver files (*.c* and *.h*) that can be used as in another project. The driver file description is follows. For more details on driver files content, see the code example project.

- *CY_SMIF_FRAM_CONFIG.h* - This file contains all defines for PSoC 6 SMIF component to access the SPI F-RAM in XIP mode.
- *CY_SMIF_FRAM_CONFIG.c* - This file contains the initialization for PSoC 6 SMIF component to access the SPI F-RAM in XIP mode
- *FRAM_ACCESS.h* - This file contains variable and all API declaration to access the SPI F-RAM in PSoC 6 SMIF MMIO mode.
- *FRAM_ACCESS.c* - This file contains all API definitions to access the SPI F-RAM in PSoC 6 SMIF MMIO mode.

In some cases, a resource used by a code example (for example, an IP block) is not supported on another device. In that case the example will not work. If you build the code targeted at such a device, you will get errors. See the PSoC device datasheet for information on the supported device.

Upgrade Information

None. See the Requirements section for details on tools and hardware requirements to successfully execute this code example.

Related Documents

Application Notes/Code Examples	
CE220823 – PSoC® 6 MCU SMIF Memory Write and Read Operation	This example demonstrates the write and read operations to the Serial Memory Interface (SMIF) in PSoC 6 MCU.
CE222460 - SPI F-RAM Access Using PSoC 6 MCU SMIF	This example demonstrates accessing the SPI F-RAM™ using PSoC® 6 MCU's Serial Memory Interface (SMIF) Component.
CE222967 - Excelon™-Ultra QSPI F-RAM Access Using PSoC 6 MCU SMIF	CE222967 demonstrates accessing the Excelon™-Ultra QSPI F-RAM™ using PSoC® 6 MCU's Serial Memory Interface (SMIF) Component in memory mapped I/O (MMIO) mode.
AN304 – SPI Guide for F-RAM™	AN304 provides the functional description, timing, and example code for SPI F-RAMs.
PSoC Creator Component Datasheets	
UART	UART communications interface
Serial Memory Interface (SMIF)	Serial Memory Interface
Control Register	Allows the firmware to set values for to use for digital signals
General-Purpose Input / Output	Supports Analog, Digital I/O and Bidirectional signal types
Device Documentation	
PSoC® 6 MCU: PSoC® 63 with BLE Datasheet	PSoC® 6 MCU: PSoC 63 with BLE Architecture Technical Reference Manual
SPI F-RAM (CY15B104QN) Datasheet	3 V, 50 MHz SPI, 4 Mb SPI FRAM datasheet
Development Kit (DVK) Documentation	
PSoC 6 WiFi-BT Pioneer Kit (CY8CKIT-062-WiFi-BT)	

Document History

Document Title: CE224073 – SPI F-RAM Access Using PSoC 6 MCU SMIF in Memory Mapped (XIP) Mode

Document Number: 002-24073

Revision	ECN	Submission Date	Description of Change
**	6214702	06/22/2018	New code example
*A	6629866	7/15/2019	Fixed the broken hyperlink for the PDL, SMIF, and QSPI FRAM product page link Updated the Related Hardware to PSoC 6 WiFi-BT Pioneer Kit

Worldwide Sales and Design Support

Cypress maintains a worldwide network of offices, solution centers, manufacturer's representatives, and distributors. To find the office closest to you, visit us at Cypress Locations.

Products

Arm® Cortex® Microcontrollers	cypress.com/arm
Automotive	cypress.com/automotive
Clocks & Buffers	cypress.com/clocks
Interface	cypress.com/interface
Internet of Things	cypress.com/iot
Memory	cypress.com/memory
Microcontrollers	cypress.com/mcu
PSoC	cypress.com/psoc
Power Management ICs	cypress.com/pmic
Touch Sensing	cypress.com/touch
USB Controllers	cypress.com/usb
Wireless Connectivity	cypress.com/wireless

PSoC® Solutions

PSoC 1 | PSoC 3 | PSoC 4 | PSoC 5LP | PSoC 6 MCU

Cypress Developer Community

Community | Projects | Videos | Blogs | Training | Components

Technical Support

cypress.com/support

All other trademarks or registered trademarks referenced herein are the property of their respective owners.

Cypress Semiconductor
198 Champion Court
San Jose, CA 95134-1709

© Cypress Semiconductor Corporation, 2018-2019. This document is the property of Cypress Semiconductor Corporation and its subsidiaries ("Cypress"). This document, including any software or firmware included or referenced in this document ("Software"), is owned by Cypress under the intellectual property laws and treaties of the United States and other countries worldwide. Cypress reserves all rights under such laws and treaties and does not, except as specifically stated in this paragraph, grant any license under its patents, copyrights, trademarks, or other intellectual property rights. If the Software is not accompanied by a license agreement and you do not otherwise have a written agreement with Cypress governing the use of the Software, then Cypress hereby grants you a personal, non-exclusive, nontransferable license (without the right to sublicense) (1) under its copyright rights in the Software (a) for Software provided in source code form, to modify and reproduce the Software solely for use with Cypress hardware products, only internally within your organization, and (b) to distribute the Software in binary code form externally to end users (either directly or indirectly through resellers and distributors), solely for use on Cypress hardware product units, and (2) under those claims of Cypress's patents that are infringed by the Software (as provided by Cypress, unmodified) to make, use, distribute, and import the Software solely for use with Cypress hardware products. Any other use, reproduction, modification, translation, or compilation of the Software is prohibited.

TO THE EXTENT PERMITTED BY APPLICABLE LAW, CYPRESS MAKES NO WARRANTY OF ANY KIND, EXPRESS OR IMPLIED, WITH REGARD TO THIS DOCUMENT OR ANY SOFTWARE OR ACCOMPANYING HARDWARE, INCLUDING, BUT NOT LIMITED TO, THE IMPLIED WARRANTIES OF MERCHANTABILITY AND FITNESS FOR A PARTICULAR PURPOSE. No computing device can be absolutely secure. Therefore, despite security measures implemented in Cypress hardware or software products, Cypress shall have no liability arising out of any security breach, such as unauthorized access to or use of a Cypress product. CYPRESS DOES NOT REPRESENT, WARRANT, OR GUARANTEE THAT CYPRESS PRODUCTS, OR SYSTEMS CREATED USING CYPRESS PRODUCTS, WILL BE FREE FROM CORRUPTION, ATTACK, VIRUSES, INTERFERENCE, HACKING, DATA LOSS OR THEFT, OR OTHER SECURITY INTRUSION (collectively, "Security Breach"). Cypress disclaims any liability relating to any Security Breach, and you shall and hereby do release Cypress from any claim, damage, or other liability arising from any Security Breach. In addition, the products described in these materials may contain design defects or errors known as errata which may cause the product to deviate from published specifications. To the extent permitted by applicable law, Cypress reserves the right to make changes to this document without further notice. Cypress does not assume any liability arising out of the application or use of any product or circuit described in this document. Any information provided in this document, including any sample design information or programming code, is provided only for reference purposes. It is the responsibility of the user of this document to properly design, program, and test the functionality and safety of any application made of this information and any resulting product. "High-Risk Device" means any device or system whose failure could cause personal injury, death, or property damage. Examples of High-Risk Devices are weapons, nuclear installations, surgical implants, and other medical devices. "Critical Component" means any component of a High-Risk Device whose failure to perform can be reasonably expected to cause, directly or indirectly, the failure of the High-Risk Device, or to affect its safety or effectiveness. Cypress is not liable, in whole or in part, and you shall and hereby do release Cypress from any claim, damage, or other liability arising from any use of a Cypress product as a Critical Component in a High-Risk Device. You shall indemnify and hold Cypress, its directors, officers, employees, agents, affiliates, distributors, and assigns harmless from and against all claims, costs, damages, and expenses, arising out of any claim, including claims for product liability, personal injury or death, or property damage arising from any use of a Cypress product as a Critical Component in a High-Risk Device. Cypress products are not intended or authorized for use as a Critical Component in any High-Risk Device except to the limited extent that (i) Cypress's published data sheet for the product explicitly states Cypress has qualified the product for use in a specific High-Risk Device, or (ii) Cypress has given you advance written authorization to use the product as a Critical Component in the specific High-Risk Device and you have signed a separate indemnification agreement.

Cypress, the Cypress logo, Spansion, the Spansion logo, and combinations thereof, WICED, PSoC, CapSense, EZ-USB, F-RAM, and Traveo are trademarks or registered trademarks of Cypress in the United States and other countries. For a more complete list of Cypress trademarks, visit cypress.com. Other names and brands may be claimed as property of their respective owners.