CE223693 –Sine Wave Generation Using PSoC 4

Objective

This code example demonstrates how to generate a sine wave using the VDAC Component of PSoC 4100PS.

Overview

This code example demonstrates how to generate a sine wave using the VDAC Component of the PSoC 4100PS device. A 1000-point look-up table (LUT) is computed and written to flash. A DMA Component is used to transfer the LUT values from flash to VDAC input data register to generate a sine wave of 125 Hz frequency.

Requirements

Tools: PSoC® Creator™ 4.2 or later versions

Programming Language: C (Arm® GCC 5.4)

Associated Parts: PSoC 4100PS

Related Hardware: CY8CKIT-147 PSoC 4100PS Prototyping Kit

Design

Figure 1 shows the PSoC Creator schematic for generating a sine wave using PSoC 4100PS.

Figure 1. PSoC Creator Schematic

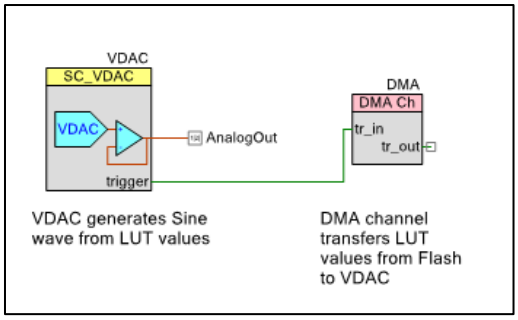

This code example calculates the sine LUT using trigonometric identities. The number of LUT points used in this code example is 1000. The frequency of the generated sine wave is shown in the following equation.

$$\text{Output Frequency} = \frac{\text{VDAC update Rate}}{\text{Number of LUT points}}$$

In this code example, the trigger output of VDAC triggers the DMA channel. The frequency of signal that appears on trigger outputof VDAC is equal to refresh rate of VDAC. In this case, the refresh rate of VDAC is 125-kHz. Therefore, the frequency of the generated sine wave for a 1000-point LUT is 125 Hz. The LUT is generated using two initial values, sin ΔΦ and cos ΔΦ, where ΔΦ = (2*π) / Number of points. The calculated LUT values are written to flash using the flash write API.

Design Considerations

This code example is designed for the PSoC 4100PS Prototyping Kit. The design is easily portable to other kits and PCBs.

Hardware Setup

Connect the CY8CKIT-147 PSoC 4100PS Prototyping Kit to your computer's USB port as Figure 2 shows.

Figure 2. Hardware Connection

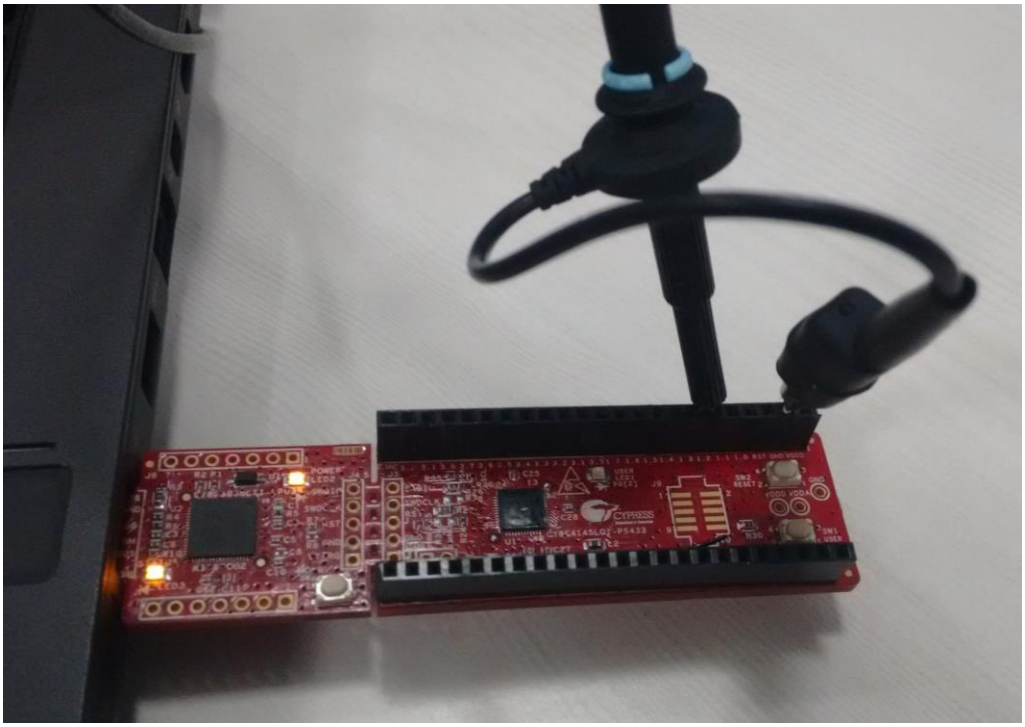

Software Setup

No software setup is required to test this code example.

Components

Table 1 lists the PSoC Creator Components used in this example, and the hardware resources used by each Component.

Table 1 List of PSoC Creator Components

Component	Instance Name	Version	Hardware Resources
SC_VDAC	VDAC	v1.40	VDAC
Analog Pin	AnalogOut	v2.20	I/O
DMA Ch	DMA	v1.0	DMA

Parameter Settings

Table 2 lists the non-default settings of all the Components used in the design.

Table 2. Component Parameters

Component Instance Name	Settings (Non-Default)
DMA	**Channel:** ▪ Channel Priority: 0 (Highest) **Descriptor 0:** ▪ Data Element size: Halfword (2 Bytes) ▪ Number of Data Elements to transfer: 1000 ▪ Source and Destination transfer width: Halfword to Word ▪ Increment source address by two: Yes
VDAC	**Basic:** ▪ Clock Source: **Internal>** Freq = 1500 KHz

Design-Wide Resources

Table 3 lists the physical pin used.

Table 3. Pin Names and Locations

Pin Name	Location
Analog_Out	P1[2]

Operation

Follow these steps:

1. Open the project attached with this code example in PSoC Creator.
2. Build the project; select **Build** > **Build CE223693_Sine_Wave_Generation**.
3. Connect the PSoC 4100PS Prototyping Kit to your computer's USB port as described in the section Hardware Setup.
4. Program the PSoC 4100PS device; select **Debug** > **Program**.
5. Connect the oscilloscope probe between P1_2 and Vss to observe the generated sine wave as Figure 3 shows.

Figure 3. Generated Sine Wave

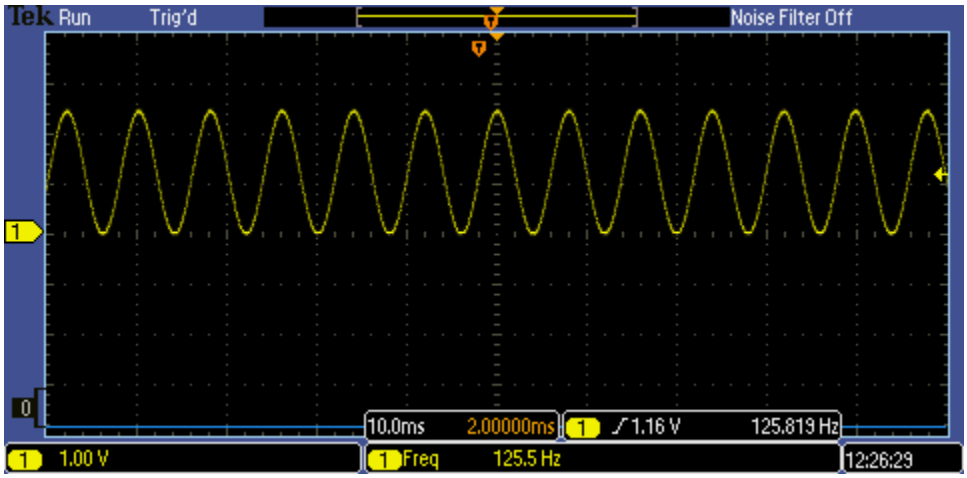

Related Documents

Table 4 lists all relevant application notes, device datasheets, technical reference manuals, component datasheets, and development kits.

Table 4. Related Documents

Application Notes		
AN79953	Getting Started with PSoC 4	Describes the PSoC 4100PS
AN223616	AFE Implementation Using PSoC 4	Discusses the AFE implementation of different types of sensors
PSoC Creator Component Datasheets		
SC_VDAC	13-bit Voltage output Digital to Analog Convertor	
DMA_Ch	Transfers data to and from memory, components, and registers	
Pins	Supports the connection of hardware resources to physical pins	
Device Documentation		
PSoC 4100PS Datasheet		
PSoC 4100PS Architecture Technical Reference Manual		
PSoC 4100PS Register Technical Reference Manual		
Development Kit (DVK) Documentation		
CY8CKIT-147 PSoC 4100PS Prototyping Kit		

Document History

Document Title: CE223693 – Sine Wave Generation Using PSoC 4

Document Number: 002-23693

Revision	ECN	Orig. of Change	Submission Date	Description of Change
**	6155957	DIMA	4/26/2018	New code example.

Worldwide Sales and Design Support

Cypress maintains a worldwide network of offices, solution centers, manufacturer's representatives, and distributors. To find the office closest to you, visit us at Cypress Locations.

Products

Arm® Cortex® Microcontrollers	cypress.com/arm
Automotive	cypress.com/automotive
Clocks & Buffers	cypress.com/clocks
Interface	cypress.com/interface
Internet of Things	cypress.com/iot
Memory	cypress.com/memory
Microcontrollers	cypress.com/mcu
PSoC	cypress.com/psoc
Power Management ICs	cypress.com/pmic
Touch Sensing	cypress.com/touch
USB Controllers	cypress.com/usb
Wireless Connectivity	cypress.com/wireless

PSoC® Solutions

PSoC 1 | PSoC 3 | PSoC 4 | PSoC 5LP | PSoC 6 MCU

Cypress Developer Community

Community Forums | Projects | Videos | Blogs | Training | Components

Technical Support

cypress.com/support

All other trademarks or registered trademarks referenced herein are the property of their respective owners.

Cypress Semiconductor
198 Champion Court
San Jose, CA 95134-1709

© Cypress Semiconductor Corporation, 2018. This document is the property of Cypress Semiconductor Corporation and its subsidiaries, including Spansion LLC ("Cypress"). This document, including any software or firmware included or referenced in this document ("Software"), is owned by Cypress under the intellectual property laws and treaties of the United States and other countries worldwide. Cypress reserves all rights under such laws and treaties and does not, except as specifically stated in this paragraph, grant any license under its patents, copyrights, trademarks, or other intellectual property rights. If the Software is not accompanied by a license agreement and you do not otherwise have a written agreement with Cypress governing the use of the Software, then Cypress hereby grants you a personal, non-exclusive, nontransferable license (without the right to sublicense) (1) under its copyright rights in the Software (a) for Software provided in source code form, to modify and reproduce the Software solely for use with Cypress hardware products, only internally within your organization, and (b) to distribute the Software in binary code form externally to end users (either directly or indirectly through resellers and distributors), solely for use on Cypress hardware product units, and (2) under those claims of Cypress's patents that are infringed by the Software (as provided by Cypress, unmodified) to make, use, distribute, and import the Software solely for use with Cypress hardware products. Any other use, reproduction, modification, translation, or compilation of the Software is prohibited.

TO THE EXTENT PERMITTED BY APPLICABLE LAW, CYPRESS MAKES NO WARRANTY OF ANY KIND, EXPRESS OR IMPLIED, WITH REGARD TO THIS DOCUMENT OR ANY SOFTWARE OR ACCOMPANYING HARDWARE, INCLUDING, BUT NOT LIMITED TO, THE IMPLIED WARRANTIES OF MERCHANTABILITY AND FITNESS FOR A PARTICULAR PURPOSE. No computing device can be absolutely secure. Therefore, despite security measures implemented in Cypress hardware or software products, Cypress does not assume any liability arising out of any security breach, such as unauthorized access to or use of a Cypress product. In addition, the products described in these materials may contain design defects or errors known as errata which may cause the product to deviate from published specifications. To the extent permitted by applicable law, Cypress reserves the right to make changes to this document without further notice. Cypress does not assume any liability arising out of the application or use of any product or circuit described in this document. Any information provided in this document, including any sample design information or programming code, is provided only for reference purposes. It is the responsibility of the user of this document to properly design, program, and test the functionality and safety of any application made of this information and any resulting product. Cypress products are not designed, intended, or authorized for use as critical components in systems designed or intended for the operation of weapons, weapons systems, nuclear installations, life-support devices or systems, other medical devices or systems (including resuscitation equipment and surgical implants), pollution control or hazardous substances management, or other uses where the failure of the device or system could cause personal injury, death, or property damage ("Unintended Uses"). A critical component is any component of a device or system whose failure to perform can be reasonably expected to cause the failure of the device or system, or to affect its safety or effectiveness. Cypress is not liable, in whole or in part, and you shall and hereby do release Cypress from any claim, damage, or other liability arising from or related to all Unintended Uses of Cypress products. You shall indemnify and hold Cypress harmless from and against all claims, costs, damages, and other liabilities, including claims for personal injury or death, arising from or related to any Unintended Uses of Cypress products.

Cypress, the Cypress logo, Spansion, the Spansion logo, and combinations thereof, WICED, PSoC, CapSense, EZ-USB, F-RAM, and Traveo are trademarks or registered trademarks of Cypress in the United States and other countries. For a more complete list of Cypress trademarks, visit cypress.com. Other names and brands may be claimed as property of their respective owners.