CE220290 - PSoC 6 MCU TCPWM Breathing LED

Objective

This code example demonstrates the implementation of an LED breathing effect using the TCPWM Component on PSoC® 6 MCU.

Requirements

Tool: PSoC Creator™ 4.2

Programming Language: C (Arm® GCC 5.4.1, Arm MDK 5.22)

Associated Parts: All PSoC 6 MCU parts with UDB

Related Hardware: CY8CKIT-062-BLE PSoC 6 BLE Pioneer Kit

Overview

This code example implements a breathing LED using two TCPWM Components (configured as PWM) and an XOR gate, without CPU involvement. The LED breathing effect is implemented by changing the duty cycle of the PWM signal from low to high and vice-versa cyclically. For more information, see AN210781 – Getting Started with PSoC 6 MCU with Bluetooth Low Energy (BLE) Connectivity.

Hardware Setup

The code example works with the default settings on the CY8CKIT-062-BLE PSoC 6 BLE Pioneer Kit. If the settings are different from the default values, see the “Selection Switches” table in the kit guide to reset to the default settings.

Operation

1. Open the *CE220290_TCPWM_Breathing* code example in PSoC Creator.
2. Build the project (**Build** > **Build CE220290_TCPWM_Breathing**).
3. Connect the CY8CKIT-062-BLE PSoC 6 BLE Pioneer Kit to your computer using the USB cable provided.
4. Program the PSoC 6 MCU (**Debug** > **Program**). See the kit guide for details on programming the kit.
5. Confirm the red LED (LED5) shows breathing effect.

Design and Implementation

Figure 1 shows the PSoC Creator schematics of this code example. This code example uses the two TCPWMs, XOR, Pin, and Clock Components.

Figure 1. TopDesign Schematic

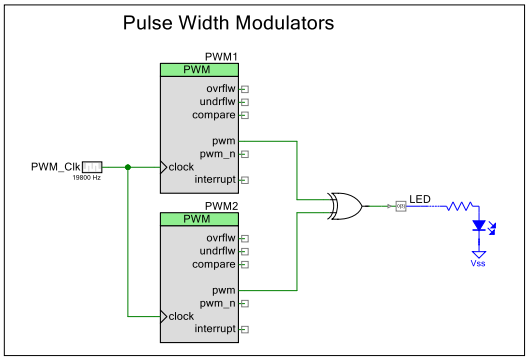

When the intensity of an LED is gradually varied from zero to maximum and then from maximum to zero cyclically, a breathing LED effect is generated. This effect is analogous to the human breathing pattern – inhale (zero to maximum) and exhale (maximum to zero).

Using the flexibility of the PSoC 6 MCU, the waveform required to generate the breathing effect is implemented entirely in hardware. In this example, two PWMs are used; one with a period 200 (200/19800Hz = 10.1 ms) and another with a period of 198 (198/19800Hz = 10 ms), both having a duty cycle of 50%. The period of 200 and 198 are the period in clock cycles while the period of 10.1 and 10 are in milliseconds. The outputs of these two PMWs are fed to an XOR gate to generate the breathing LED output, as shown in Figure 2. The breathing period of the LED is given by the least common multiple (LCM) of the two periods.

Firmware starts the PWMs and Clock components. After that, the CPU is put to Sleep mode as it is not required for any other operation and to save power.

Figure 2. Generating Breathing PWM Output Using PWMs and XOR

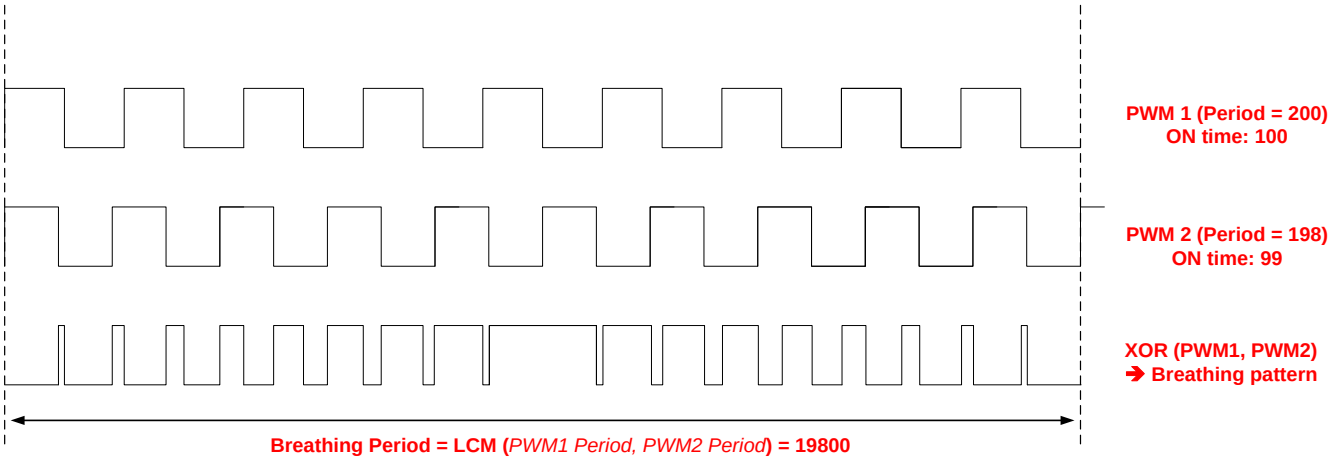

Components and Settings

Table 1 lists the PSoC Creator Components used in this example, how they are used in the design, and the non-default settings required so they function as intended.

Table 1. List of PSoC Creator Components

Component	Instance Name	Purpose	Non-default Settings
PWM (TCPWM)	PWM1	Generate square wave and bring out the signal to GPIO	**Period 0**: 199 **Compare 0**: 100
	PWM2		**Period 0**: 197 **Compare 0**: 99
Digital Output Pin	LED	Drive the PWM signal to LED	-
Clock	PWM_Clk	Drive the PWM at 19.8kHz	**Frequency**: 19800 Hz
Xor	xor_1	XOR the PWM signals	-

Note: The period set in Component settings is one less than the required period as a PWM starts at zero not one.

For information on the hardware resources used by a Component, see the Component datasheet.

Table 2 shows the pin assignment for the project done through the **Pins** tab in the **Design Wide Resources** window.

Table 2. Pin Names and Location

Pin Name	Location
LED	P0[3]

Reusing This Example

This code example is designed to run on CY8CKIT-062-BLE PSoC 6 BLE Pioneer Kit. To port the design to a different PSoC 6 MCU device and/or kit, change the target device in Device Selector, and update the pin assignments in the Design Wide Resources Pins settings as needed. For single-core PSoC 6 MCU devices, port the code from *main_cm4.c* to *main.c* file.

Related Documents

Application Notes	
AN210781 – Getting Started with PSoC 6 MCU with Bluetooth Low Energy (BLE) Connectivity	Describes PSoC 63 with Bluetooth Low Energy (BLE) Connectivity and how to build your first PSoC Creator project
PSoC Creator Component Datasheets	
PWM	Supports fixed-function PWM implementation
Pins	Supports connection of hardware resources to physical pins
Clock	Supports local clock generation
Related Code Examples	
CE220291	PSoC 6 MCU: TCPWM Square Wave
Device Documentation	
PSoC 6 MCU: PSoC 63 with BLE Datasheet	PSoC 6 MCU: PSoC 63 with BLE Architecture Technical Reference Manual
Development Kit (DVK) Documentation	
CY8CKIT-062-BLE PSoC 6 BLE Pioneer Kit	

Document History

Document Title: CE220290 - PSoC 6 MCU TCPWM Breathing LED

Document Number: 002-20290

Revision	ECN	Orig. of Change	Submission Date	Description of Change
*A	5845464	SRDS	08/17/2017	Initial public release
*B	5991534	SRDS	12/21/2017	Updated template and minor text changes. Updated project to PSoC Creator 4.2 Beta.
*C	6622058	NRSH	07/16/2019	Minor updates to code and document for clarity

Worldwide Sales and Design Support

Cypress maintains a worldwide network of offices, solution centers, manufacturer's representatives, and distributors. To find the office closest to you, visit us at Cypress Locations.

Products

Arm® Cortex® Microcontrollers	cypress.com/arm
Automotive	cypress.com/automotive
Clocks & Buffers	cypress.com/clocks
Interface	cypress.com/interface
Internet of Things	cypress.com/iot
Memory	cypress.com/memory
Microcontrollers	cypress.com/mcu
PSoC	cypress.com/psoc
Power Management ICs	cypress.com/pmic
Touch Sensing	cypress.com/touch
USB Controllers	cypress.com/usb
Wireless Connectivity	cypress.com/wireless

PSoC® Solutions

PSoC 1 | PSoC 3 | PSoC 4 | PSoC 5LP | PSoC 6 MCU

Cypress Developer Community

Community | Code Examples | Projects | Videos | Blogs | Training | Components

Technical Support

cypress.com/support

All other trademarks or registered trademarks referenced herein are the property of their respective owners.

Cypress Semiconductor
198 Champion Court
San Jose, CA 95134-1709

© Cypress Semiconductor Corporation, 2017-2019. This document is the property of Cypress Semiconductor Corporation and its subsidiaries ("Cypress"). This document, including any software or firmware included or referenced in this document ("Software"), is owned by Cypress under the intellectual property laws and treaties of the United States and other countries worldwide. Cypress reserves all rights under such laws and treaties and does not, except as specifically stated in this paragraph, grant any license under its patents, copyrights, trademarks, or other intellectual property rights. If the Software is not accompanied by a license agreement and you do not otherwise have a written agreement with Cypress governing the use of the Software, then Cypress hereby grants you a personal, non-exclusive, nontransferable license (without the right to sublicense) (1) under its copyright rights in the Software (a) for Software provided in source code form, to modify and reproduce the Software solely for use with Cypress hardware products, only internally within your organization, and (b) to distribute the Software in binary code form externally to end users (either directly or indirectly through resellers and distributors), solely for use on Cypress hardware product units, and (2) under those claims of Cypress's patents that are infringed by the Software (as provided by Cypress, unmodified) to make, use, distribute, and import the Software solely for use with Cypress hardware products. Any other use, reproduction, modification, translation, or compilation of the Software is prohibited.

TO THE EXTENT PERMITTED BY APPLICABLE LAW, CYPRESS MAKES NO WARRANTY OF ANY KIND, EXPRESS OR IMPLIED, WITH REGARD TO THIS DOCUMENT OR ANY SOFTWARE OR ACCOMPANYING HARDWARE, INCLUDING, BUT NOT LIMITED TO, THE IMPLIED WARRANTIES OF MERCHANTABILITY AND FITNESS FOR A PARTICULAR PURPOSE. No computing device can be absolutely secure. Therefore, despite security measures implemented in Cypress hardware or software products, Cypress shall have no liability arising out of any security breach, such as unauthorized access to or use of a Cypress product. CYPRESS DOES NOT REPRESENT, WARRANT, OR GUARANTEE THAT CYPRESS PRODUCTS, OR SYSTEMS CREATED USING CYPRESS PRODUCTS, WILL BE FREE FROM CORRUPTION, ATTACK, VIRUSES, INTERFERENCE, HACKING, DATA LOSS OR THEFT, OR OTHER SECURITY INTRUSION (collectively, "Security Breach"). Cypress disclaims any liability relating to any Security Breach, and you shall and hereby do release Cypress from any claim, damage, or other liability arising from any Security Breach. In addition, the products described in these materials may contain design defects or errors known as errata which may cause the product to deviate from published specifications. To the extent permitted by applicable law, Cypress reserves the right to make changes to this document without further notice. Cypress does not assume any liability arising out of the application or use of any product or circuit described in this document. Any information provided in this document, including any sample design information or programming code, is provided only for reference purposes. It is the responsibility of the user of this document to properly design, program, and test the functionality and safety of any application made of this information and any resulting product. "High-Risk Device" means any device or system whose failure could cause personal injury, death, or property damage. Examples of High-Risk Devices are weapons, nuclear installations, surgical implants, and other medical devices. "Critical Component" means any component of a High-Risk Device whose failure to perform can be reasonably expected to cause, directly or indirectly, the failure of the High-Risk Device, or to affect its safety or effectiveness. Cypress is not liable, in whole or in part, and you shall and hereby do release Cypress from any claim, damage, or other liability arising from any use of a Cypress product as a Critical Component in a High-Risk Device. You shall indemnify and hold Cypress, its directors, officers, employees, agents, affiliates, distributors, and assigns harmless from and against all claims, costs, damages, and expenses, arising out of any claim, including claims for product liability, personal injury or death, or property damage arising from any use of a Cypress product as a Critical Component in a High-Risk Device. Cypress products are not intended or authorized for use as a Critical Component in any High-Risk Device except to the limited extent that (i) Cypress's published data sheet for the product explicitly states Cypress has qualified the product for use in a specific High-Risk Device, or (ii) Cypress has given you advance written authorization to use the product as a Critical Component in the specific High-Risk Device and you have signed a separate indemnification agreement.

Cypress, the Cypress logo, Spansion, the Spansion logo, and combinations thereof, WICED, PSoC, CapSense, EZ-USB, F-RAM, and Traveo are trademarks or registered trademarks of Cypress in the United States and other countries. For a more complete list of Cypress trademarks, visit cypress.com. Other names and brands may be claimed as property of their respective owners.