Please note that Cypress is an Infineon Technologies Company.
The document following this cover page is marked as “Cypress” document as this is the company that originally developed the product. Please note that Infineon will continue to offer the product to new and existing customers as part of the Infineon product portfolio.

Continuity of document content
The fact that Infineon offers the following product as part of the Infineon product portfolio does not lead to any changes to this document. Future revisions will occur when appropriate, and any changes will be set out on the document history page.

Continuity of ordering part numbers
Infineon continues to support existing part numbers. Please continue to use the ordering part numbers listed in the datasheet for ordering.

CE211283 - My First PSoC® Analog Coprocessor Design

Objective

This code example demonstrates the features of PSoC® Analog Coprocessor by designing an analog front end (AFE) for an ambient light sensor (ALS).

Overview

The ALS output is a weak current signal proportional to the ambient light illuminance. This code example provides an AFE design consisting of a trans-impedance amplifier (TIA) to condition the ALS output signal. The conditioned signal from the TIA is measured using a 12-bit SAR ADC. The resulting ADC output is calibrated into percentage for the ambient light illuminance range of 0 to 1000 lux. For the demonstration, the LED intensity is changed based on the calculated percentage value.

Requirements

Tool: PSoC Creator 3.3 SP2.3

Programming Language: C (GCC 4.7.3)

Associated Parts: All PSoC Analog Coprocessor parts

Related Hardware: CY8CKIT-048 PSoC Analog Coprocessor Pioneer Kit

Design

TIA is implemented using one of the four opamps available in the PSoC Analog Coprocessor device and the external passive components. The external passive components are required for setting the TIA gain and to filter the sensor signal. The non-inverting input of the TIA is driven by a buffered 1.20-V bandgap voltage signal, which causes a DC bias of 1.20 V at the TIA output. The Bandgap voltage signal is generated using a Programmable Voltage Reference (PVref) Component and it is buffered using an Opamp Component. With the increasing ambient light illuminance, the reverse current through the ALS results in the TIA output voltage to drop proportionally from 1.20 V, which is measured using a 12-bit SAR ADC. The PWM Component is placed to drive an external LED.

Figure 1. ALS Sensor Interface Schematic

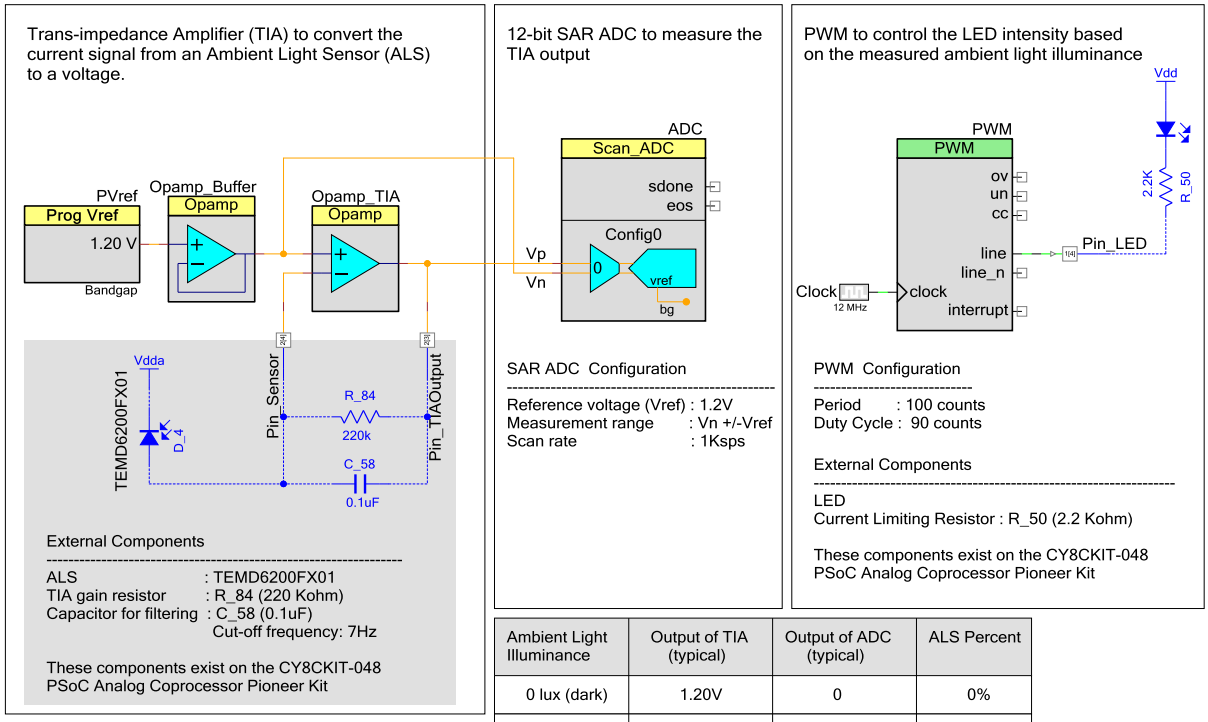

Visit https://en.wikipedia.org/wiki/Lux to know about the illuminance values for various conditions.

Ambient Light Illuminance	Output of TIA (typical)	Output of ADC (typical)	ALS Percent
0 lux (dark)	1.20V	0	0%
100 lux	1.19V	-15	10%
500 lux	1.15V	-75	50%
1000 lux	1.11V	-150	100%

In the firmware, the measured TIA output is filtered and calibrated in terms of percentage. The calculated percentage value is used to change the duty cycle of the PWM driving the LED.

Design Considerations

- TIA Gain. It sets the sensitivity of the ALS current measurement; higher the gain, better the sensitivity. In this code example, the TIA gain is changed using the feedback resistor R_84 (see Figure 1).
- System Response Speed. The response speed depends on the filter capacitor C_58 (see Figure 1) and the IIR low-pass filter implemented in firmware.
- Low-Power Operation. This code example can be easily modified to use the low-power modes - Sleep and Deep-Sleep. To use the Sleep mode, keep the CPU in Sleep mode until the new ADC result is available. Enable the ADC interrupt to wake up the CPU for processing the ADC result. To use the Deep-Sleep mode, enable the Deep-Sleep operation of the Opamp and use a watchdog timer (WDT) to wake up the CPU at regular intervals for the measurement.
- Design Extension. The project can be extended to create a closed-loop system, such as the backlight controller, by using the PWM signal to drive an external buck/boost switching circuit.

This code example is designed for use with the CY8CKIT-048 PSoC Analog Coprocessor Pioneer Kit. The kit has the required external components. If you are using other development platform, wire the external components to the device as Figure 1 shows.

Components

Table 1 lists the PSoC Creator Components used in this example, as well as hardware resources used by each of them.

Table 1. List of PSoC Creator Components

Component	Instance Name	Version	Hardware Resources
Opamp	Opamp_TIA	v1.20	½ Continuous Time Block (CTB)
PVref	PVref	v1.0	¼ Programmable reference block (PRB)
Opamp	Opamp_Buffer	V1.20	½ Continuous Time Block (CTB)
Scanning SAR ADC	ADC	v1.0	1 SAR ADC
PWM (TCPWM Mode)	PWM	v2.10	1 TCPWM
Clock	Clock	v2.20	1 Peripheral Clock Divider
Analog Pin	Pin_Sensor Pin_TIAOutput	v2.20	2 Pins
Digital Output Pin	Pin_LED	v2.20	1 Pin

Parameter Settings

The following figures show the changed settings for the major Components used in this example.

Figure 2. Opamp_TIA Configuration

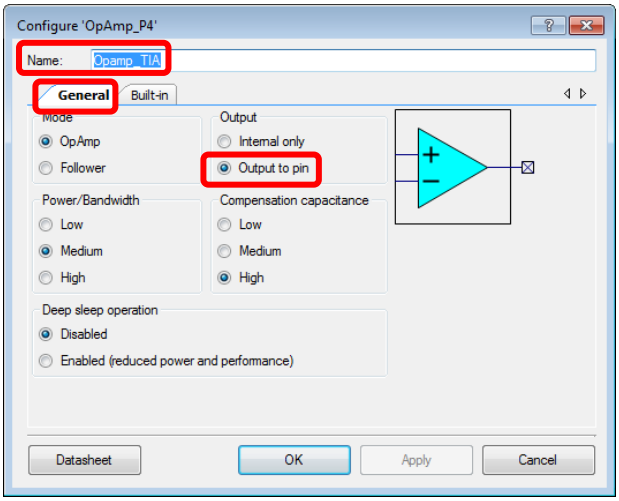

Figure 3. PVref Configuration

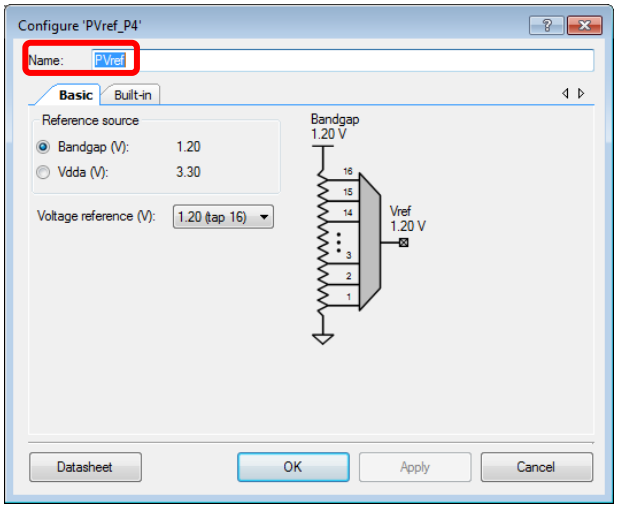

Figure 4. ADC Configuration

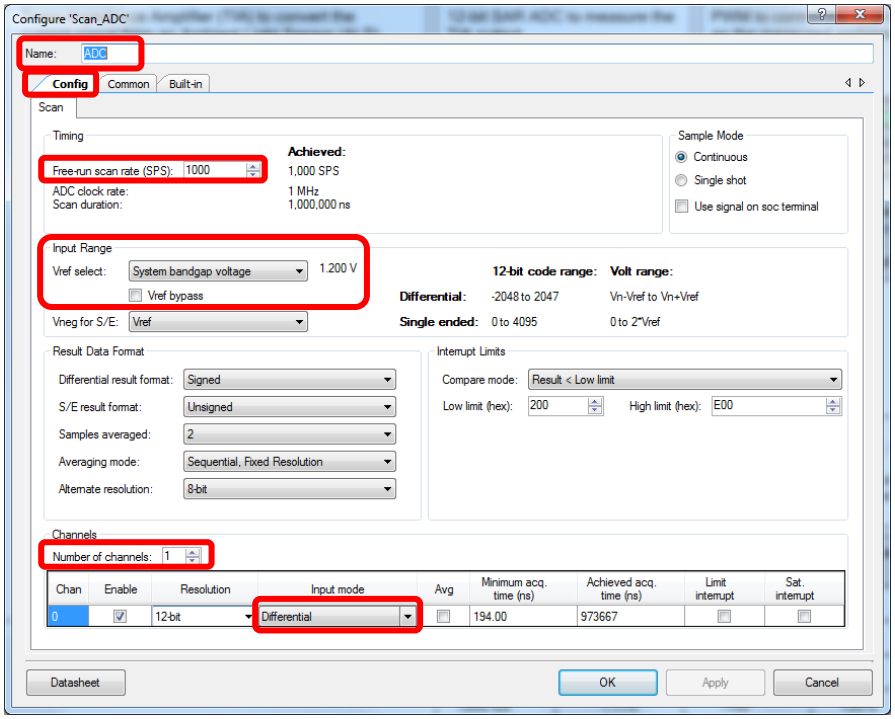

Operation

Do the following:

1. Connect the PSoC Analog Coprocessor Pioneer board to your computer's USB port as Figure 5 shows.

Figure 5. CY8CKIT-048 PSoC Analog Coprocessor Pioneer Board

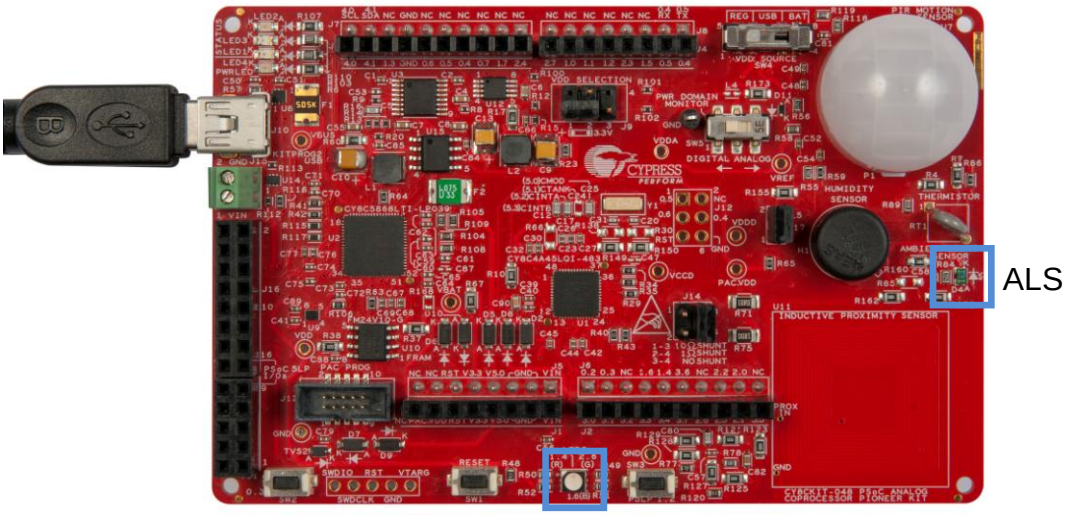

2. Build the project, and program the device
3. Move your hand over the ambient light sensor (ALS), and observe that the red LED intensity varies accordingly. You may need to move the test setup to a location with sufficient ambient light.

Related Documents

Table 2 lists all relevant application notes, device datasheets, Component datasheets, technical reference manuals, and the development kit.

Table 2. Related Documents

Application Notes		
AN211293	Getting Started with PSoC Analog Coprocessor	Describes the PSoC Analog Coprocessor, and how to build this code example.
AN211294	AFE Implementation using PSoC Analog Coprocessor	Describes different sensor interfaces using PSoC Analog Coprocessor.
PSoC Creator Component Datasheets		
Opamp	Supports bare opamp mode and unity gain buffer	
PVref	Supports generation of reference voltages using internal bandgap or the supply source VDDA	
Scanning SAR ADC	Supports multiple channel scan with configurable resolution and input modes (single-ended and differential)	
PWM	Configurable PWM modes - dead time between complementary signals and pseudo-random PWM generation	
Pins	Supports connection of hardware resources to physical pins	
Device Documentation		
PSoC Analog Coprocessor Datasheets		
PSoC Analog Coprocessor Architecture Technical Reference Manual		
PSoC Analog Coprocessor Register Technical Reference Manual		
Development Kit (DVK) Documentation		
CY8CKIT-048 PSoC Analog Coprocessor Pioneer Kit		

PSoC Resources

Cypress provides a wealth of data at www.cypress.com to help you to select the right PSoC device for your design, and quickly and effectively integrate the device into your design. For a comprehensive list of resources, see KBA86521, How to Design with PSoC 3, PSoC 4, PSoC 5LP and PSoC Analog Coprocessor. The following is an abbreviated list for PSoC Analog Coprocessor:

- **Overview:** PSoC Portfolio, PSoC Roadmap
- **Product Selectors:** PSoC 1, PSoC 3, PSoC 4, PSoC 5LP, or PSoC Analog Coprocessor. In addition, PSoC Creator includes a device selection tool.
- **Datasheets** describe and provide electrical specifications for the PSoC 3, PSoC 4, PSoC 5LP, and PSoC Analog Coprocessor device families.
- **CapSense® Design Guides:** Learn how to design capacitive touch-sensing applications with the PSoC 3, PSoC 4, PSoC 5LP, and PSoC Analog Coprocessor families of devices.
- **Application Notes** and **Code Examples** cover a broad range of topics, from basic to advanced level. Many of the application notes include code examples.
- **Technical Reference Manuals (TRM)** provide detailed descriptions of the architecture and registers in each of the PSoC 3, PSoC 4, PSoC 5LP, and PSoC Analog Coprocessor device families.
- **Development Kits:** The CY8CKIT-048 PSoC Analog Coprocessor Pioneer Kit is an easy-to-use and inexpensive development platform. This kit can function as a standalone kit or as an Arduino shield.

PSoC Creator

PSoC Creator is a free Windows-based Integrated Design Environment (IDE). It enables concurrent hardware and firmware design of systems based on PSoC 3, PSoC 4, PSoC 5LP, and PSoC Analog Coprocessor (see Figure 6). With PSoC Creator, you can:

1. Drag and drop Components to build your hardware system design in the main design workspace
2. Codesign your application firmware with the PSoC hardware
3. Configure Components using configuration tools
4. Explore the library of 100+ Components
5. Review Component datasheets

Figure 6. PSoC Creator Features

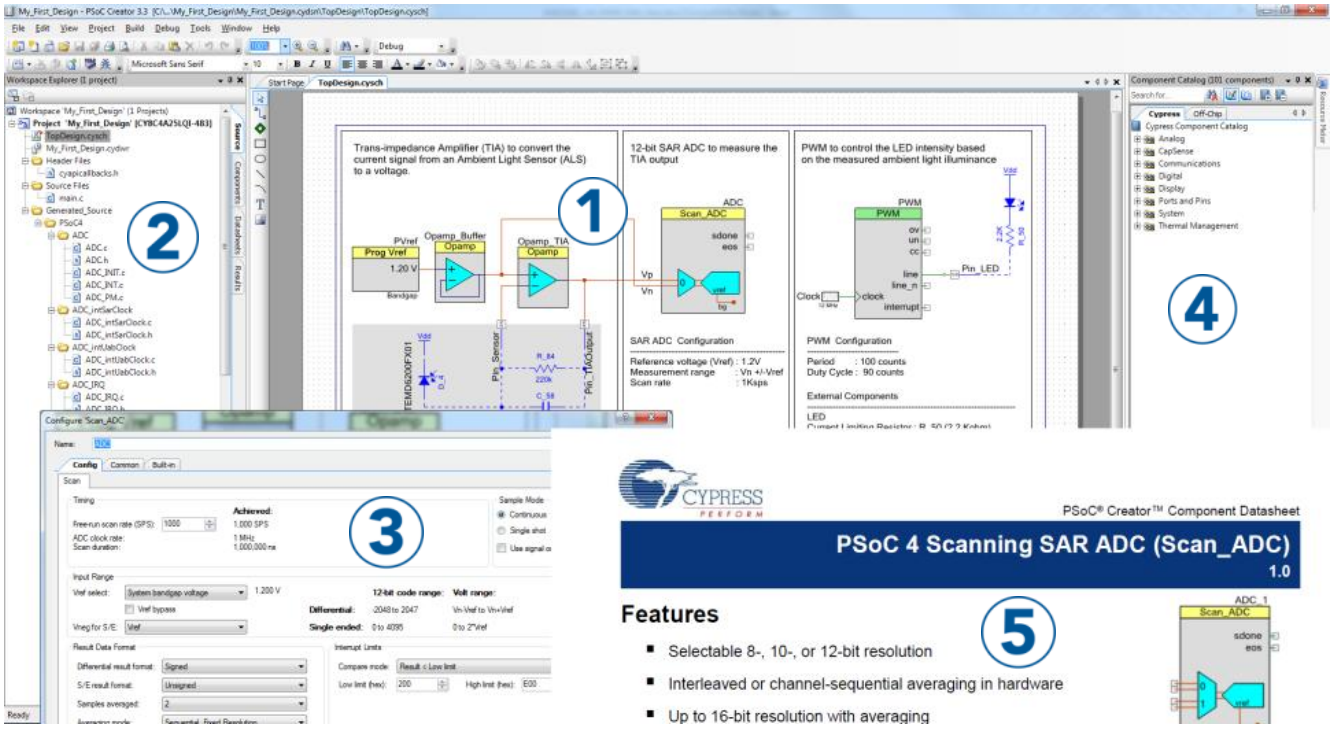

Document History

Document Title: CE211283 - My First PSoC® Analog Coprocessor Design

Document Number: 002-11283

Revision	ECN	Orig. of Change	Submission Date	Description of Change
**	5152761	RJVB	03/30/2016	New code example

Worldwide Sales and Design Support

Cypress maintains a worldwide network of offices, solution centers, manufacturer's representatives, and distributors. To find the office closest to you, visit us at Cypress Locations.

Products

ARM® Cortex® Microcontrollers	cypress.com/arm
Automotive	cypress.com/automotive
Clocks & Buffers	cypress.com/clocks
Interface	cypress.com/interface
Lighting & Power Control	cypress.com/powerpsoc
Memory	cypress.com/memory
PSoC	cypress.com/psoc
Touch Sensing	cypress.com/touch
USB Controllers	cypress.com/usb
Wireless/RF	cypress.com/wireless

PSoC® Solutions

cypress.com/psoc

PSoC 1 | PSoC 3 | PSoC 4 | PSoC 5LP | PSoC Analog Coprocessor

Cypress Developer Community

Community | Forums | Blogs | Video | Training

Technical Support

cypress.com/support

PSoC is a registered trademark and PSoC Creator is a trademark of Cypress Semiconductor Corp. All other trademarks or registered trademarks referenced herein are the property of their respective owners.

Cypress Semiconductor
198 Champion Court
San Jose, CA 95134-1709

Phone : 408-943-2600
Fax : 408-943-4730
Website : www.cypress.com

© Cypress Semiconductor Corporation, 2016. This document is the property of Cypress Semiconductor Corporation and its subsidiaries, including Spansion LLC ("Cypress"). This document, including any software or firmware included or referenced in this document ("Software"), is owned by Cypress under the intellectual property laws and treaties of the United States and other countries worldwide. Cypress reserves all rights under such laws and treaties and does not, except as specifically stated in this paragraph, grant any license under its patents, copyrights, trademarks, or other intellectual property rights. If the Software is not accompanied by a license agreement and you do not otherwise have a written agreement with Cypress governing the use of the Software, then Cypress hereby grants you under its copyright rights in the Software, a personal, non-exclusive, nontransferable license (without the right to sublicense) (a) for Software provided in source code form, to modify and reproduce the Software solely for use with Cypress hardware products, only internally within your organization, and (b) to distribute the Software in binary code form externally to end users (either directly or indirectly through resellers and distributors), solely for use on Cypress hardware product units. Cypress also grants you a personal, non-exclusive, nontransferable, license (without the right to sublicense) under those claims of Cypress's patents that are infringed by the Software (as provided by Cypress, unmodified) to make, use, distribute, and import the Software solely to the minimum extent that is necessary for you to exercise your rights under the copyright license granted in the previous sentence. Any other use, reproduction, modification, translation, or compilation of the Software is prohibited.

CYPRESS MAKES NO WARRANTY OF ANY KIND, EXPRESS OR IMPLIED, WITH REGARD TO THIS DOCUMENT OR ANY SOFTWARE, INCLUDING, BUT NOT LIMITED TO, THE IMPLIED WARRANTIES OF MERCHANTABILITY AND FITNESS FOR A PARTICULAR PURPOSE. Cypress reserves the right to make changes to this document without further notice. Cypress does not assume any liability arising out of the application or use of any product or circuit described in this document. Any information provided in this document, including any sample design information or programming code, is provided only for reference purposes. It is the responsibility of the user of this document to properly design, program, and test the functionality and safety of any application made of this information and any resulting product. Cypress products are not designed, intended, or authorized for use as critical components in systems designed or intended for the operation of weapons, weapons systems, nuclear installations, life-support devices or systems, other medical devices or systems (including resuscitation equipment and surgical implants), pollution control or hazardous substances management, or other uses where the failure of the device or system could cause personal injury, death, or property damage ("Unintended Uses"). A critical component is any component of a device or system whose failure to perform can be reasonably expected to cause the failure of the device or system, or to affect its safety or effectiveness. Cypress is not liable, in whole or in part, and Company shall and hereby does release Cypress from any claim, damage, or other liability arising from or related to all Unintended Uses of Cypress products. Company shall indemnify and hold Cypress harmless from and against all claims, costs, damages, and other liabilities, including claims for personal injury or death, arising from or related to any Unintended Uses of Cypress products.

Cypress, the Cypress logo, Spansion, the Spansion logo, and combinations thereof, PSoC, CapSense, EZ-USB, F-RAM, and Traveo are trademarks or registered trademarks of Cypress in the United States and other countries. For a more complete list of Cypress trademarks, visit cypress.com. Other names and brands may be claimed as property of their respective owners.