CE211252 - Interfacing the PSoC® Analog Coprocessor with an Ambient Light Sensor

Objective

This code example demonstrates how to implement an analog front end (AFE) for an ambient light sensor (ALS), using the PSoC® Analog Coprocessor.

Overview

This code example demonstrates how to measure the current output from an ALS and calculate the ambient illuminance. The measured current and the calculated illuminance are sent over I^2C to a host PC running the Cypress's Bridge Control Panel (BCP) software. Also, the ambient illuminance value is used to proportionately control the brightness of an LED.

Requirements

Tool: PSoC Creator™ 3.3 CP3 or later versions

Programming Language: C (ARM® GCC 4.9.3)

Associated Parts: All PSoC Analog Coprocessor parts

Related Hardware: CY8CKIT-048 PSoC Analog Coprocessor Pioneer Kit

Design

Figure 1 shows the PSoC Creator schematic to interface an ALS to the PSoC Analog Coprocessor.

Figure 1. Ambient Light Sensing Schematic

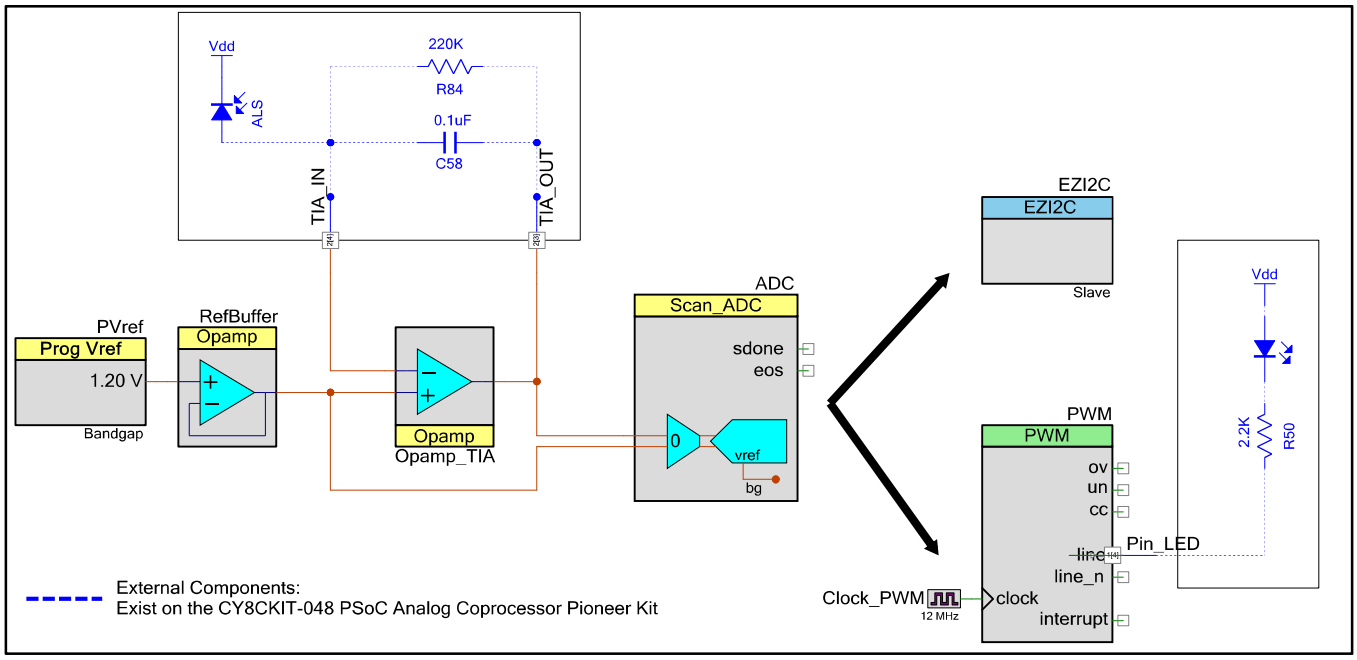

The current output from the ALS is converted to a voltage signal using a transimpedance amplifier (TIA). The TIA is built using one of the Opamps in the PSoC Analog Coprocessor, as well as external passive components (R84 and C58).

The reference voltage for the TIA is set to the 1.2-V bandgap reference. The bandgap voltage is independent of supply voltage fluctuations and hence provides a stable voltage reference. This voltage is generated using the reference component (PV_{ref}), and is buffered using an Opamp.

The output of the TIA is measured using a 12-bit Scanning SAR ADC Component with the positive input connected to the TIA output and the negative input connected to the reference voltage of the TIA. The Scanning SAR ADC is configured in differential mode with its reference (V_{REF}) connected to the bandgap voltage. This gives the ADC measurement range as $V_n \pm V_{REF}$, where V_n is the negative input voltage of the Scanning SAR ADC.

The CPU takes the output of the Scanning SAR ADC, and calculates the photodiode current and then the illuminance value. The illuminance value is written to the PWM Component to set the intensity of an LED (LED5). Also, the measured current and the calculated illuminance are sent over I^2C to a host PC.

The CY8CKIT-048 PSoC Analog Coprocessor Pioneer board has an ambient light sensor (TEMD6200FX01) connected to the PSoC Analog Coprocessor. All components required for testing this code example are available on the kit board.

Design Considerations

This design can be adapted for other ambient light sensors. The TIA gain may need to be changed, depending on the ALS characteristics.

This code example is designed for the PSoC Analog Coprocessor Pioneer Kit. The design is easily portable to other kits and PCBs, typically by just changing the sensor, I^2C, or LED pin assignments.

Hardware Setup

Set the SW4 switch on the PSoC Analog Coprocessor Pioneer Kit to 'REG' position to select the regulator as the V_{DD} source. Set the jumper J9 to 1-2 for 3.3 V device operation. If you want to use a different power source or a different V_{DD} value, select the SW4 and J9 settings according to Table 1.

Table 1. PSoC Analog Coprocessor Pioneer Board Power Supply Source and V_{DD} Selection

Power Supply Source	V_{DD} (volts)	SW4 (position)	J9 (jumper position)
USB	1.8	REG	Open
	3.3	REG	1-2
	5.0	USB	Any position except 2-3
	1.8 - 3.3	REG	4-2
External VIN	1.8	REG	open
	3.3	REG	1-2
	5.0	REG	2-3
Arduino baseboard	1.8	REG	open
	3.3	REG	1-2
Coin Cell	3.0	BAT	NA

Connect the PSoC Analog Coprocessor Pioneer kit to your computer's USB port using the USB cable provided with the kit, as Figure 2 shows.

Figure 2. Hardware Connection

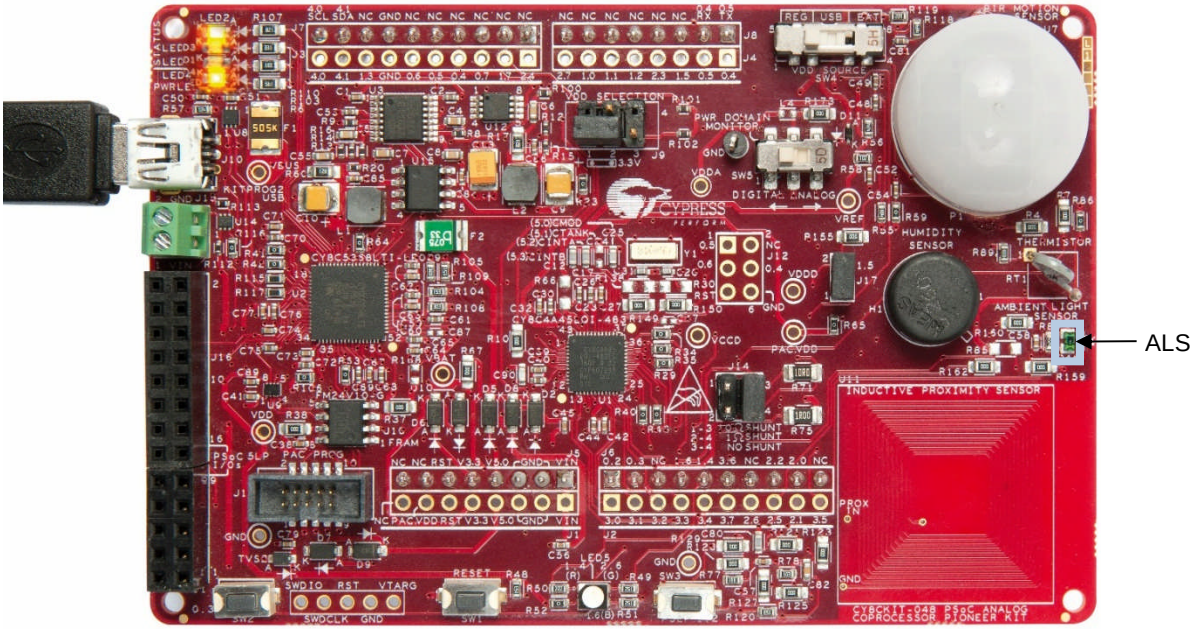

Software Setup

This section describes how to set up the Cypress Bridge Control Panel (BCP) software for viewing sensor data sent over I^2C.

The BCP is installed automatically as part of the kit software installation. Follow these steps to configure the BCP:

1. Open the BCP from: **Start** > **All Programs** > **Cypress** > **Bridge Control Panel <version>** > **Bridge Control Panel <version>**.

2. Select **KitProg2/<serial number>** under **Connected I2C/SPI/RX8 Ports**. See Figure 3. Note that the PSoC Analog Coprocessor Pioneer board must be connected to the USB port of your computer.

Figure 3. Bridge Control Panel

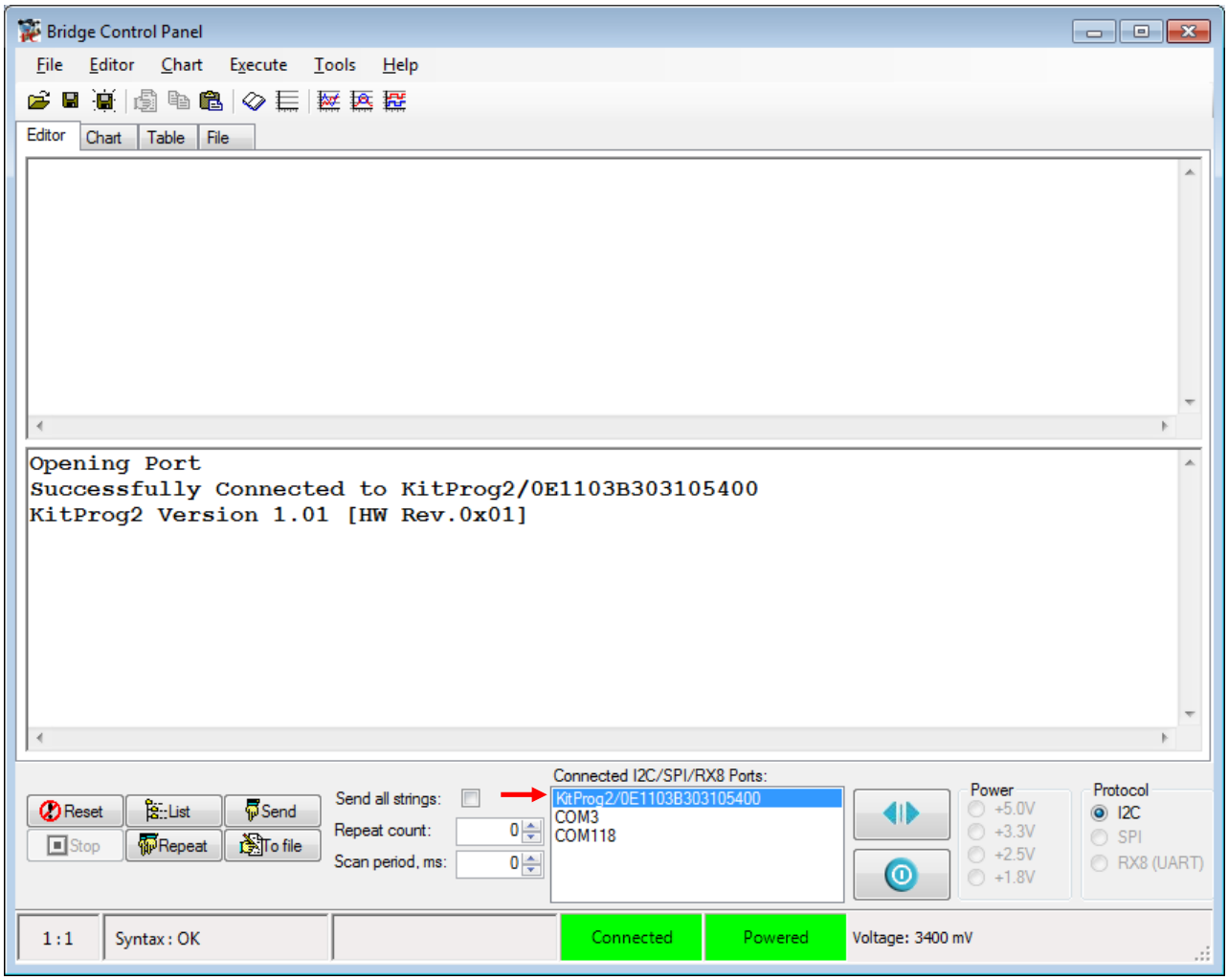

3. Select menu item **Tools** > **Protocol Configuration**, navigate to the **I2C** tab, and set the **I2C speed** to '100 kHz'. Click **OK**.

4. Select menu item **Chart** > **Variable Settings** and **Load** the *CE211252_Ambient_Light_Sensing.ini* file from the following path: `<Install_Directory>\CY8CKIT-048 PSoC Analog Coprocessor Pioneer Kit\<version>\Firmware\PSoC Analog Coprocessor\BCP Command\`. Click **OK**. See Figure 4.

   This file includes the variable names, their data types, and their signs, to represent the data sent over I^2C.

Figure 4. Variable Settings in Bridge Control Panel Software

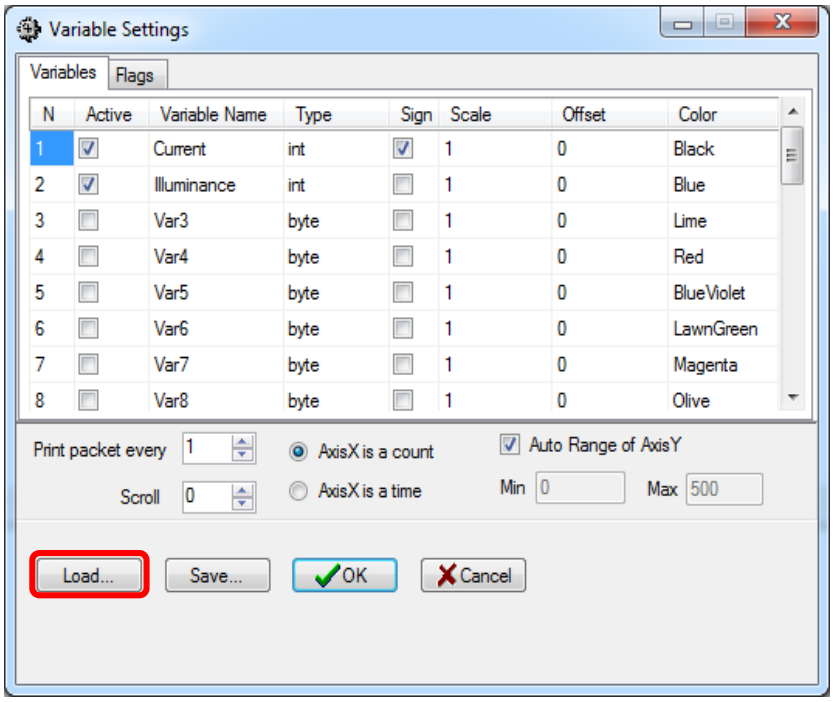

The BCP is now ready for reading and displaying the sensor data. Refer to the Operation for the testing procedure.

Components

Table 2 lists the PSoC Creator Components used in this example, and the hardware resources used by each Component.

Table 2. List of PSoC Creator Components

Component	Instance Name	Version	Hardware Resources
Scanning SAR ADC	ADC	v1.10	SAR ADC
PVref	PVref	v1.0	Programmable Reference Block (PRB)
Opamp	Opamp_TIA	v1.20	Continuous Time Block (CTB)
Opamp	RefBuffer	V1.20	Continuous Time Block (CTB)
PWM (TCPWM mode)	PWM	v2.10	Timer Counter Pulse Width Modulator (TCPWM)
EZI2C Slave (SCB mode)	EZI2C	v3.20	Serial Communication Block (SCB)
Clock	Clock_PWM	v2.20	Clock
Analog Pin	TIA_IN, TIA_Out	v2.20	I/O
Digital Output	Pin_LED	v2.20	I/O

Parameter Settings

Table 3 lists the non-default settings of all the components used in the design.

Table 3. Component Parameters

Component Instance Name	Settings (Non-Default)
ADC	Free-run scan rate (SPS): 1000 Number of channels: 1
PVref	-
RefBuffer	Mode: Follower
Opamp_TIA	Output: Output to Pin
PWM	Period: 1200 Compare: 600 PWM align: Right align
EZI2C	-
Clock_PWM	-
Pins TIA_IN and TIA_OUT	External terminal: Enabled
Pin_LED	External terminal: Enabled

Note EZI2C pins are embedded within the Component.

Design-Wide Resources

Table 4 lists the physical pins used.

Table 4. Pin Names and Locations

Pin Name	Location
TIA_IN	P2[4]
TIA_OUT	P2[3]
EZI2C: SCL	P4[0]
EZI2C: SDA	P4[1]
Pin_LED	P1[4]

Operation

Follow these steps:

1. Select the *CE211252_Ambient_Light_Sensing.cywrk* file in the PSoC Creator Start Page, under **Examples and Kits** > **Kits** > **CY8CKIT-048**. Select a location to save the code example.
2. Build the project; select PSoC Creator menu item **Build** > **Build CE211252_Ambient_Light_Sensing**.
3. Connect the kit board to your computer's USB port, as described in the section Hardware Setup.
4. Program the PSoC Analog Coprocessor device; select menu item **Debug** > **Program**.
5. Configure the BCP software, as described in the section Software Setup.
6. Select **File** > **Open File** and open the *CE211252_Ambient_Light_Sensing.iic* file from the following path: `<Install_Directory>\CY8CKIT-048 PSoC Analog Coprocessor Pioneer Kit\<version>\Firmware\PSoC Analog Coprocessor\BCP Command\`.

   This file contains the read command to be executed by the BCP. The command appears on the panel, as Figure 5 shows.

Figure 5. Read Command in the Bridge Control Panel

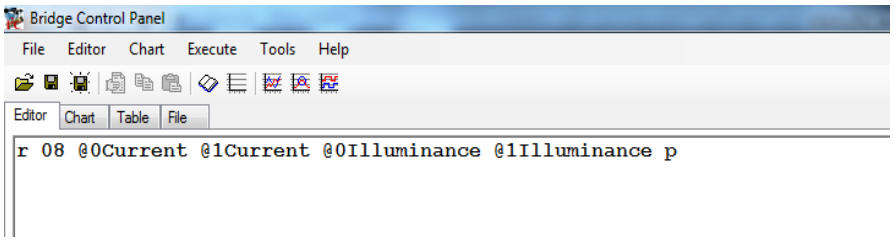

7. Click the read command on the **Editor** tab and then click the **Repeat** button to read the sensor data continuously.
8. Go to the **Chart** tab and observe the plot of the sensor data (ALS current in nA and the ambient light illuminance in lux) that are read from the PSoC Analog Coprocessor device. See Figure 6.

Figure 6. ALS Values Displayed on the Bridge Control Panel Chart

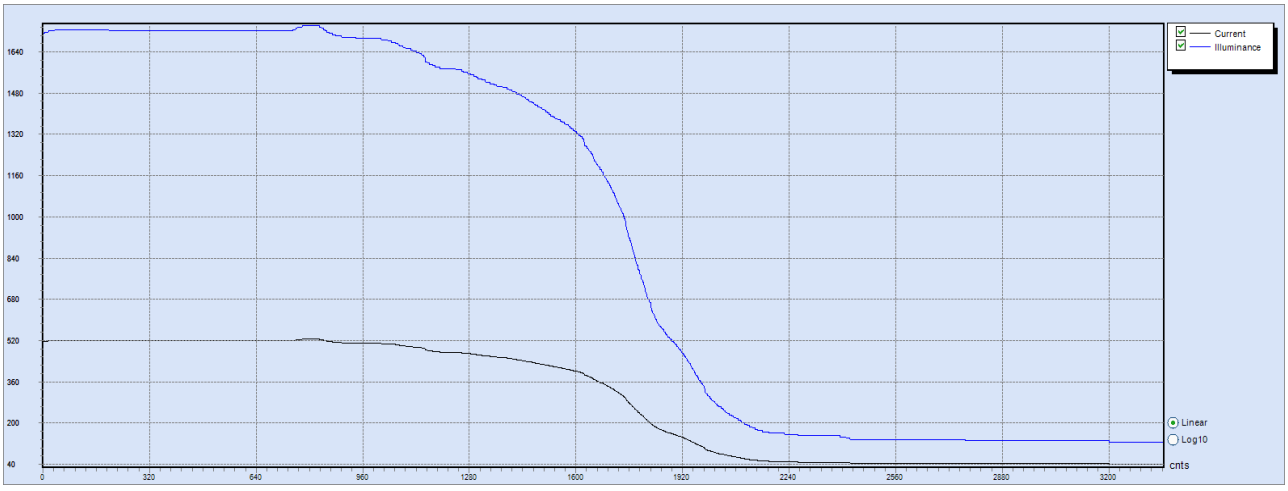

9. Cover the ALS and observe the variation in the red LED. You may need to place the kit in a location with sufficient ambient light.

Related Documents

Table 5 lists all relevant application notes, device datasheets, technical reference manuals, Component datasheets and development kits.

Table 5. Related Documents

Application Notes		
AN211293	Getting Started with PSoC Analog Coprocessor	Describes the PSoC Analog Coprocessor
PSoC Creator Component Datasheets		
Scanning SAR ADC	Supports multiple channel hardware scan with single ended and differential input modes	
PVref	Generates configurable voltage references using internal bandgap voltage or supply voltage VDDA	
Opamp	Supports voltage follower mode and the Opamp mode with configurable power	
PWM	Supports generation of complementary signals	
EZI2C Slave	Simplified I2C slave implementation	
Clock	Generates peripheral clocks with configurable frequency	
Pins	Supports connection of hardware resources to physical pins	
Device Documentation		
PSoC Analog Coprocessor Datasheets		
PSoC Analog Coprocessor Architecture Technical Reference Manual		
PSoC Analog Coprocessor Register Technical Reference Manual		
Development Kit (DVK) Documentation		
CY8CKIT-048 PSoC Analog Coprocessor Pioneer Kit		

Document History

Document Title: CE211252 - Interfacing the PSoC® Analog Coprocessor with an Ambient Light Sensor

Document Number: 002-11252

Revision	ECN	Orig. of Change	Submission Date	Description of Change
**	5301135	DIMA	06/08/2016	New code example.

Worldwide Sales and Design Support

Cypress maintains a worldwide network of offices, solution centers, manufacturer's representatives, and distributors. To find the office closest to you, visit us at Cypress Locations.

Products

ARM® Cortex® Microcontrollers	cypress.com/arm
Automotive	cypress.com/automotive
Clocks & Buffers	cypress.com/clocks
Interface	cypress.com/interface
Lighting & Power Control	cypress.com/powerpsoc
Memory	cypress.com/memory
PSoC	cypress.com/psoc
Touch Sensing	cypress.com/touch
USB Controllers	cypress.com/usb
Wireless/RF	cypress.com/wireless

PSoC® Solutions

cypress.com/psoc

PSoC 1 | PSoC 3 | PSoC 4 | PSoC 5LP | PSoC Analog Coprocessor

Cypress Developer Community

Community | Forums | Blogs | Video | Training

Technical Support

cypress.com/support

PSoC Creator is a trademark of Cypress Semiconductor Corporation.

Cypress Semiconductor
198 Champion Court
San Jose, CA 95134-1709

Phone : +1-408-943-2600
Fax : +1-408-943-4730
Website : www.cypress.com

© Cypress Semiconductor Corporation, 2016. This document is the property of Cypress Semiconductor Corporation and its subsidiaries, including Spansion LLC ("Cypress"). This document, including any software or firmware included or referenced in this document ("Software"), is owned by Cypress under the intellectual property laws and treaties of the United States and other countries worldwide. Cypress reserves all rights under such laws and treaties and does not, except as specifically stated in this paragraph, grant any license under its patents, copyrights, trademarks, or other intellectual property rights. If the Software is not accompanied by a license agreement and you do not otherwise have a written agreement with Cypress governing the use of the Software, then Cypress hereby grants you under its copyright rights in the Software, a personal, non-exclusive, nontransferable license (without the right to sublicense) (a) for Software provided in source code form, to modify and reproduce the Software solely for use with Cypress hardware products, only internally within your organization, and (b) to distribute the Software in binary code form externally to end users (either directly or indirectly through resellers and distributors), solely for use on Cypress hardware product units. Cypress also grants you a personal, non-exclusive, nontransferable, license (without the right to sublicense) under those claims of Cypress's patents that are infringed by the Software (as provided by Cypress, unmodified) to make, use, distribute, and import the Software solely to the minimum extent that is necessary for you to exercise your rights under the copyright license granted in the previous sentence. Any other use, reproduction, modification, translation, or compilation of the Software is prohibited.

CYPRESS MAKES NO WARRANTY OF ANY KIND, EXPRESS OR IMPLIED, WITH REGARD TO THIS DOCUMENT OR ANY SOFTWARE, INCLUDING, BUT NOT LIMITED TO, THE IMPLIED WARRANTIES OF MERCHANTABILITY AND FITNESS FOR A PARTICULAR PURPOSE. Cypress reserves the right to make changes to this document without further notice. Cypress does not assume any liability arising out of the application or use of any product or circuit described in this document. Any information provided in this document, including any sample design information or programming code, is provided only for reference purposes. It is the responsibility of the user of this document to properly design, program, and test the functionality and safety of any application made of this information and any resulting product. Cypress products are not designed, intended, or authorized for use as critical components in systems designed or intended for the operation of weapons, weapons systems, nuclear installations, life-support devices or systems, other medical devices or systems (including resuscitation equipment and surgical implants), pollution control or hazardous substances management, or other uses where the failure of the device or system could cause personal injury, death, or property damage ("Unintended Uses"). A critical component is any component of a device or system whose failure to perform can be reasonably expected to cause the failure of the device or system, or to affect its safety or effectiveness. Cypress is not liable, in whole or in part, and Company shall and hereby does release Cypress from any claim, damage, or other liability arising from or related to all Unintended Uses of Cypress products. Company shall indemnify and hold Cypress harmless from and against all claims, costs, damages, and other liabilities, including claims for personal injury or death, arising from or related to any Unintended Uses of Cypress products.

Cypress, the Cypress logo, Spansion, the Spansion logo, and combinations thereof, PSoC, CapSense, EZ-USB, F-RAM, and Traveo are trademarks or registered trademarks of Cypress in the United States and other countries. For a more complete list of Cypress trademarks, visit cypress.com. Other names and brands may be claimed as property of their respective owners.