CE195354 – PSoC 4 Quadrature Decoder

Objective

This code example demonstrates the usage of Quadrature Decoder mode in the PSoC® 4 TCPWM Component.

Overview

This code example uses the following:

- One TCPWM Component in Quadrature Decoder mode to detect the direction of the incremental encoder rotation
- Two TCPWM Components in PWM mode to emulate incremental encoder signal
- LEDs to show the result of direction detection

Requirements

Tool: PSoC Creator™ 4.2

Programming Language: C (Arm® GCC 5.4.1 and Arm MDK 5.22)

Associated Parts: All PSoC 4 parts

Related Hardware: CY8CKIT-041-40XX, CY8CKIT-041-41XX, CY8CKIT-042, CY8CKIT-042-BLE, CY8CKIT-042-BLE-A, CY8CKIT-044, CY8CKIT-046, CY8CKIT-048, CY8CKIT-149

Hardware Setup

Table 1 lists the supported kits. This example project is configured by default to run on the CY8CKIT-042 development kit from Cypress Semiconductor. The project can be simply migrated to any supported kit by changing the target device with **Device Selector** called from the project's context menu. Refer to Table 1 for device number of your kit.

To run this code example, you will need two jumper wires. Jumper connections are described in the **Operation** section.

This example uses the kit's default configuration. Refer to the kit guide to ensure that the kit is configured correctly.

Table 1. Supported Kits and Devices

Development Kit	Series	Device
CY8CKIT-041-40XX	PSoC 4000S	CY8C4045AZI-S413
CY8CKIT-041-41XX	PSoC 4100S	CY8C4146AZI-S433
CY8CKIT-042	PSoC 4200	CY8C4245AXI-483
CY8CKIT-042-BLE	PSoC 4200 BLE	CY8C4247LQI-BL483
CY8CKIT-042-BLE-A	PSoC 4200 BLE	CY8C4248LQI-BL483
CY8CKIT-044	PSoC 4200M	CY8C4247AZI-M485
CY8CKIT-046	PSoC 4200L	CY8C4248BZI-L489
CY8CKIT-048	PSoC Analog Coprocessor	CY8C4A45LQI-483
CY8CKIT-149	PSoC 4100S Plus	CY8C4147AZI-S475

The pin assignments for the supported kits are provided in Table 2. For these kits, the project includes control files to automatically assign pins with respect to the kit hardware connections during the project build. To change pin assignments, override the control file selections in the Pin Editor of the Design Wide Resources by selecting the new port or pin number.

Table 2. Pin Assignments

Development Kit	Pin Assignment					
	TestA_Out	TestB_Out	phiA_In	phiB_In	LED_Green	LED_Red
CY8CKIT-041-40XX	P1[0]	P1[2]	P2[0]	P2[1]	P2[6]	P3[4]
CY8CKIT-041-41XX	P1[0]	P1[2]	P2[0]	P2[1]	P2[6]	P3[4]
CY8CKIT-042	P1[0]	P1[2]	P2[0]	P2[1]	P0[2]	P1[6]
CY8CKIT-042-BLE	P1[0]	P1[2]	P2[0]	P2[1]	P3[6]	P2[6]
CY8CKIT-042-BLE-A	P1[0]	P1[2]	P2[0]	P2[1]	P3[6]	P2[6]
CY8CKIT-044	P1[0]	P1[2]	P2[0]	P2[1]	P2[6]	P0[6]
CY8CKIT-046	P3[6]	P2[0]	P5[5]	P5[6]	P5[3]	P5[2]
CY8CKIT-048	P1[0]	P1[2]	P3[4]	P3[5]	P2[6]	P1[4]
CY8CKIT-149	P2[4]	P2[6]	P1[3]	P2[1]	P1[6]	P1[4]

Software Setup

None.

Operation

1. Plug your kit board into your computer's USB port.
2. Build the project and program it into the PSoC 4 device. Choose **Debug** > **Program**. For more information on device programming, see the PSoC Creator Help.
3. Connect the test signal to the Quadrature Decoder inputs: TestA_Out to the phiA_In pin; TestB_Out to the phiB_In pin. Observe the green LED's ON state. For pin assignments, refer to Table 2.
4. Swap the test signals: connect phiA_In to the TestB_Out pin; phiB_In to the TestA_Out pin. Observe the red LED's ON state.

   Note: CY8CKIT-149 uses two green LEDs: LED7 and LED8.
5. Disconnect the phiA_In and phiB_In inputs from the signal source. Observe the green and red LEDs' OFF state.

Design and Implementation

Figure 1 shows the PSoC Creator schematic for this code example.

The design consists of the two parts – the test signal generator and Quadrature Decoder with direction indication. The test signal generator generates two digital signals with the frequency of 250 Hz but with 90° phase shift. To achieve the signal phase-shift, PWM_A and PWM_B Components start simultaneously, but with different initial counter values. These signals emulate the signal from the incremental encoder.

The Quadrature Decoder counter value changes (increases or decreases) depending on the quadrature input signal. If the encoder rotates in the clockwise direction, the phiA signal's rising edge leads the phiB signal's rising edge and the counter value increases. If the encoder rotates in the counterclockwise direction, phiB signal's rising edge leads the phiA signal's rising edge and the counter value decreases.

The firmware detects the direction of the encoder rotation by comparing the current value of the pulse counter to the previous value. If the current value of the pulse counter is bigger than the previous value, the green LED turns ON; otherwise the red LED turns ON. If the previous and current values are equal, then both LEDs are disabled.

Figure 1. Top Design Schematic

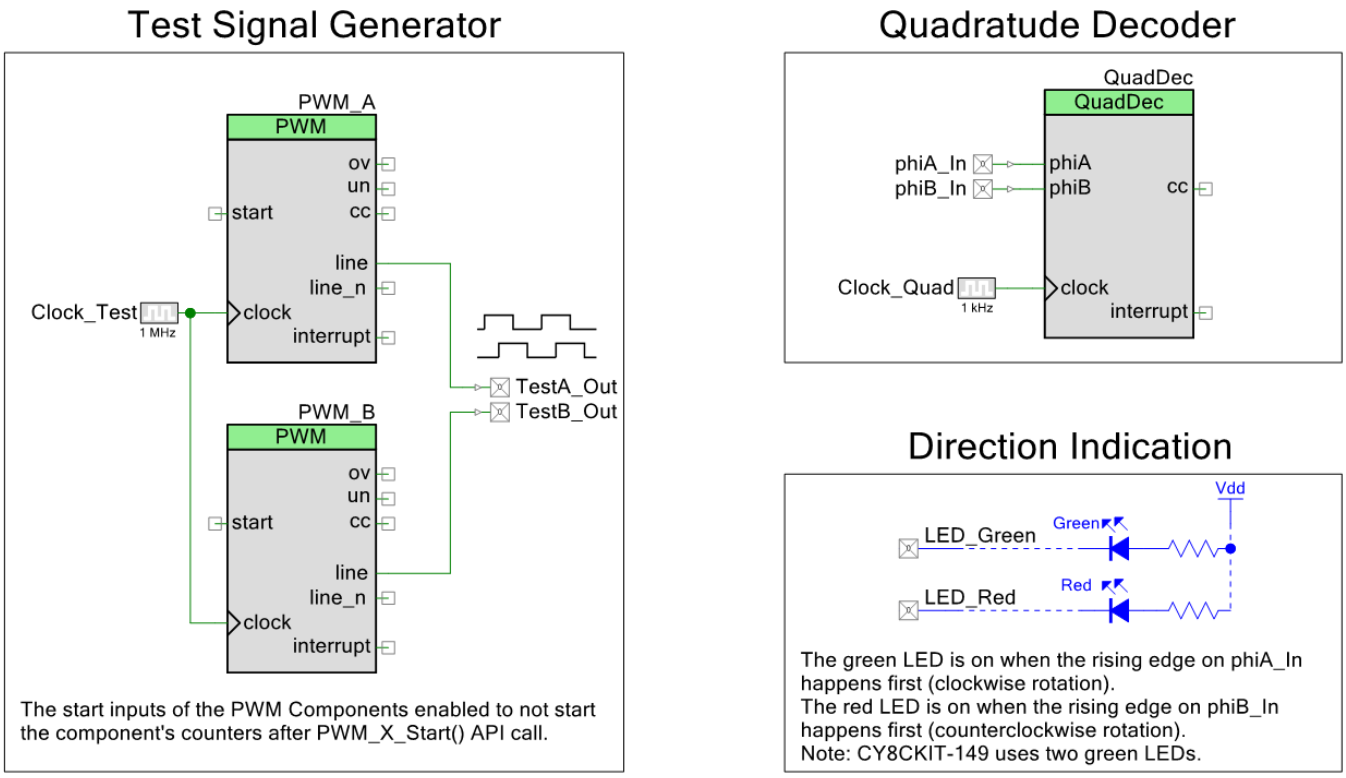

Components and Settings

Table 3 lists the PSoC Creator Components used in this example, how they are used in the design, and the non-default settings required so they function as intended.

Table 3. PSoC Creator Components

Component	Instance Name	Purpose	Non-default Settings
Quadrature Decoder (TCPWM mode)	QuadDec	Detect the incremental encoder direction.	None.
PWM (TCPWM mode)	PWM_A	Generate TestA signal.	See Figure 2
	PWM_B	Generate TestB signal.	
Clock	Clock_Test	The clock source for the PWM_A and PWM_B Components.	Frequency: 1 MHz
	Clock_Quad	The clock source for the Quadrature Decoder.	Frequency: 1 kHz
Digital Input Pin	phiA_In	Input A of the Quadrature Decoder.	Drive mode: Resistive pull-up Initial drive state: High (1)
	phiB_In	Input B of the Quadrature Decoder.	
Digital Output Pin	TestA_Out	Output of TestA signal.	None.
	TestB_Out	Output of TestB signal.	
	LED_Green	Controls the green LED state.	HW connection: OFF
	LED_Red	Controls the red LED state.	

For information on the hardware resources used by the Component, see the Component datasheet.

Figure 2 highlights the non-default settings for the PWM (TCPWM mode) Components.

Figure 2. PWM Components Settings

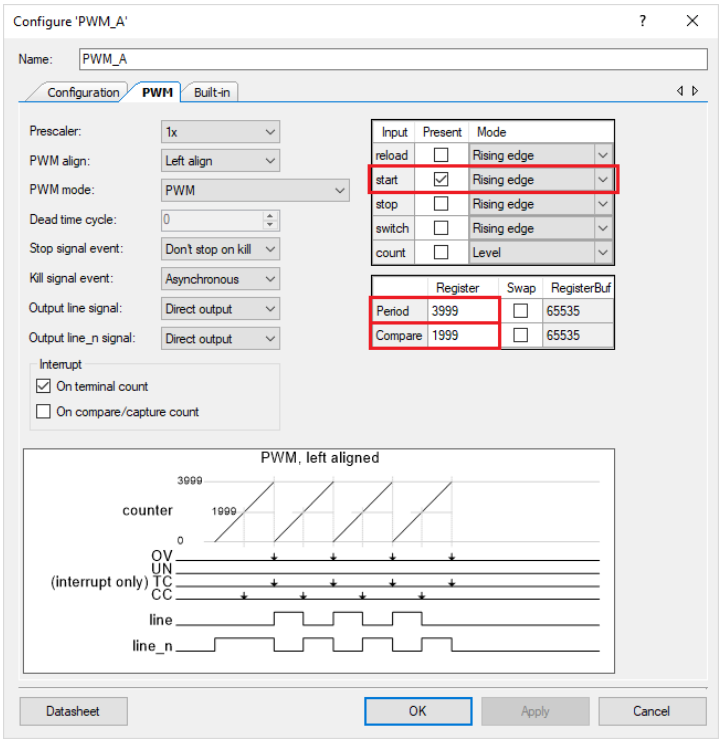

Reusing This Example

This example is designed for the kits, shown in Table 1. To port the design to a different PSoC 4 device and/or kit, change the target device using Device Selector and update the pin assignments in the Design Wide Resources Pins settings as needed.

This example can be used with the CY8CKIT-040 pioneer kit, but with an external test signal source, because the device used in this kit (CY8C4014LQI-422) has only one TCPWM block. For this kit, delete the Test Signal Generator Components in Top Design and PWM Components startup code in the *main.c* file.

Related Documents

Application Notes	
AN79953 – Getting Started with PSoC 4	Introduces the PSoC 4 architecture and development tools
PSoC Creator Component Datasheets	
TCPWM	Supports fixed-function Timer/Counter implementation
Clock	Supports local clock generation
Pins	Supports connection of hardware resources to physical pins
Device Documentation	
PSoC 4 Datasheets	PSoC 4 Technical Reference Manuals
Development Kit Documentation	
PSoC 4 Kits	

Document History

Document Title: CE195354 – PSoC 4 Quadrature Decoder

Document Number: 001-95354

Revision	ECN	Orig. of Change	Submission Date	Description of Change
**	6000848	MYKZTMP1	12/22/2017	New code example

Worldwide Sales and Design Support

Cypress maintains a worldwide network of offices, solution centers, manufacturer's representatives, and distributors. To find the office closest to you, visit us at Cypress Locations.

Products

Arm® Cortex® Microcontrollers	cypress.com/arm
Automotive	cypress.com/automotive
Clocks & Buffers	cypress.com/clocks
Interface	cypress.com/interface
Internet of Things	cypress.com/iot
Memory	cypress.com/memory
Microcontrollers	cypress.com/mcu
PSoC	cypress.com/psoc
Power Management ICs	cypress.com/pmic
Touch Sensing	cypress.com/touch
USB Controllers	cypress.com/usb
Wireless Connectivity	cypress.com/wireless

PSoC® Solutions

PSoC 1 | PSoC 3 | PSoC 4 | PSoC 5LP | PSoC 6 MCU

Cypress Developer Community

Community Forums | Projects | Videos | Blogs | Training | Components

Technical Support

cypress.com/support

All other trademarks or registered trademarks referenced herein are the property of their respective owners.

Cypress Semiconductor
198 Champion Court
San Jose, CA 95134-1709

© Cypress Semiconductor Corporation, 2017. This document is the property of Cypress Semiconductor Corporation and its subsidiaries, including Spansion LLC ("Cypress"). This document, including any software or firmware included or referenced in this document ("Software"), is owned by Cypress under the intellectual property laws and treaties of the United States and other countries worldwide. Cypress reserves all rights under such laws and treaties and does not, except as specifically stated in this paragraph, grant any license under its patents, copyrights, trademarks, or other intellectual property rights. If the Software is not accompanied by a license agreement and you do not otherwise have a written agreement with Cypress governing the use of the Software, then Cypress hereby grants you a personal, non-exclusive, nontransferable license (without the right to sublicense) (1) under its copyright rights in the Software (a) for Software provided in source code form, to modify and reproduce the Software solely for use with Cypress hardware products, only internally within your organization, and (b) to distribute the Software in binary code form externally to end users (either directly or indirectly through resellers and distributors), solely for use on Cypress hardware product units, and (2) under those claims of Cypress's patents that are infringed by the Software (as provided by Cypress, unmodified) to make, use, distribute, and import the Software solely for use with Cypress hardware products. Any other use, reproduction, modification, translation, or compilation of the Software is prohibited.

TO THE EXTENT PERMITTED BY APPLICABLE LAW, CYPRESS MAKES NO WARRANTY OF ANY KIND, EXPRESS OR IMPLIED, WITH REGARD TO THIS DOCUMENT OR ANY SOFTWARE OR ACCOMPANYING HARDWARE, INCLUDING, BUT NOT LIMITED TO, THE IMPLIED WARRANTIES OF MERCHANTABILITY AND FITNESS FOR A PARTICULAR PURPOSE. No computing device can be absolutely secure. Therefore, despite security measures implemented in Cypress hardware or software products, Cypress does not assume any liability arising out of any security breach, such as unauthorized access to or use of a Cypress product. In addition, the products described in these materials may contain design defects or errors known as errata which may cause the product to deviate from published specifications. To the extent permitted by applicable law, Cypress reserves the right to make changes to this document without further notice. Cypress does not assume any liability arising out of the application or use of any product or circuit described in this document. Any information provided in this document, including any sample design information or programming code, is provided only for reference purposes. It is the responsibility of the user of this document to properly design, program, and test the functionality and safety of any application made of this information and any resulting product. Cypress products are not designed, intended, or authorized for use as critical components in systems designed or intended for the operation of weapons, weapons systems, nuclear installations, life-support devices or systems, other medical devices or systems (including resuscitation equipment and surgical implants), pollution control or hazardous substances management, or other uses where the failure of the device or system could cause personal injury, death, or property damage ("Unintended Uses"). A critical component is any component of a device or system whose failure to perform can be reasonably expected to cause the failure of the device or system, or to affect its safety or effectiveness. Cypress is not liable, in whole or in part, and you shall and hereby do release Cypress from any claim, damage, or other liability arising from or related to all Unintended Uses of Cypress products. You shall indemnify and hold Cypress harmless from and against all claims, costs, damages, and other liabilities, including claims for personal injury or death, arising from or related to any Unintended Uses of Cypress products.

Cypress, the Cypress logo, Spansion, the Spansion logo, and combinations thereof, WICED, PSoC, CapSense, EZ-USB, F-RAM, and Traveo are trademarks or registered trademarks of Cypress in the United States and other countries. For a more complete list of Cypress trademarks, visit cypress.com. Other names and brands may be claimed as property of their respective owners.