CE195348 – PrISM

Objective

This example shows how to use a PSoC Creator PrISM Component.

Requirements

Tool: PSoC Creator™ 4.2

Programming Language: C (Arm® GCC 5.4.1)

Associated Parts: All PSoC 4 family kits that have UDBs that can be configured into a PrISM Component.

Related Hardware: CY8CKIT-042 PSoC 4 Pioneer Kit

Overview

The UDB-based PrISM Component provides modulation technology. A pseudo-random sequence is generated to compare against a user-selected density. If the random number is higher than that of the density, the LED is turned ON. This can be inverted in Component settings. This code example uses the PrISM Component to control two LEDs. Both LEDs breathe and are out of phase by 180 degrees, this is because the pulse type of each output is inverted.

Software Setup

This code example requires no software setup

Operation

1. Connect CY8CKIT-042 kit to your computer using a USB cable.
2. Build the project and program it into the PSoC 4 MCU device. Choose **Debug** > **Program**. For more information on device programming, see PSoC Creator Help.
3. Confirm that the on-kit LED turns from blue to green and back.

Design and Implementation

The PrISM Component provides a modulation technology that significantly reduces low-frequency flicker. This is then connected to two LEDs that breathe as the density is changed.

PrISM

This example uses 8 bits of resolution, which means that the density value is 0 to 0xFF with 0 being a 0% duty cycle while 0xFF is 100% duty cycle with the rest being scaled. The density is compared to a pseudo-random number generated by the PrISM Component. The LED is turned ON or OFF based on whether the pseudo random number is higher or lower than the density. The output averages out to the desired duty cycle as seen in Figure 2.

The following functions are performed:

1. The PrISM Component starts.
2. An interrupt is set up to trigger each time the pseudo-random number equals 0xFF, which occurs once during each cycle of the pseudo random number generator.
3. The interrupt triggers and adds or subtracts one to the density depending on the current cycle.
4. After the density has reached its limits of either 0 or 0xFF, the count flips and goes in the opposite direction.
5. The density is compared to the pseudo-random number and gives an output of high or low depending on the pulse type.

The top-level design of the PSoC Creator project is shown in Figure 1.

Figure 1. PrISM Top Design Schematic

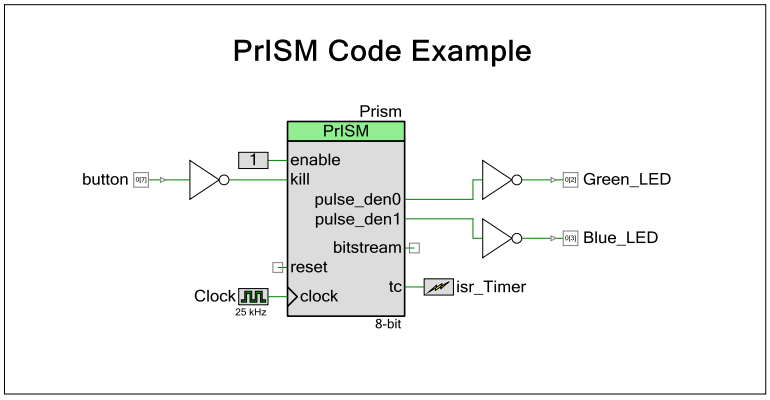

Figure 2. Timing of PrISM Output

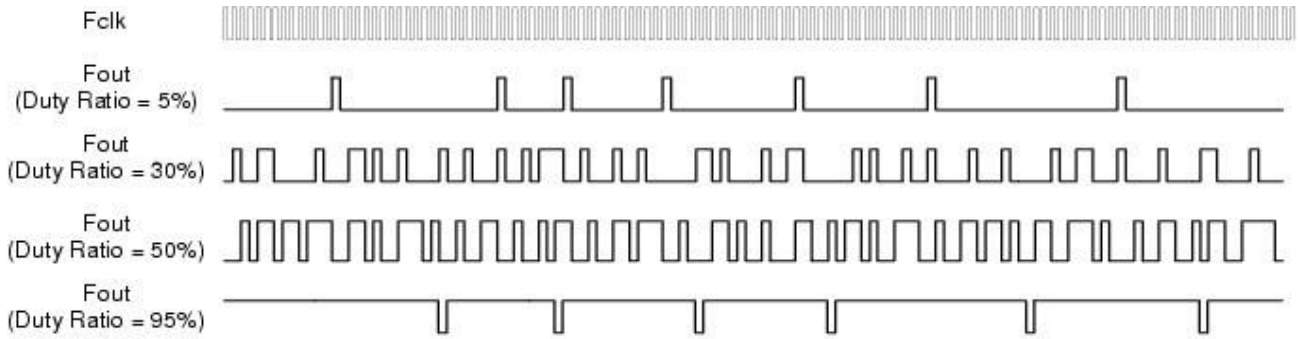

Components and Settings

Table 1 lists the PSoC Creator Components used in this example, how they are used in the design, and the non-default settings required so they function as intended.

Table 1. PSoC Creator Components

Component	Instance Name	Purpose	Non-default Settings
PrISM	Prism	Control LEDs	Change PulseDensity0 and 1 to **8**. Change Pulse Type 1 to **Less than or Equal.**

For information on the hardware resources used by a Component, see the Component datasheet found in Related Documents.

Reusing this Example

This example can be ported to various PSoC 4 MCU devices, kits, or both. Before porting this example, note the following:

1. Not all PSoC 4 devices have UDBs that can be configured into a PrISM Component.
2. Pinouts change from kit to kit. Some pins may need to be moved. See the **Pin Layout** tab in PSoC Creator.

To port the code to a new device, in PSoC Creator, select **Project** > **Device Selector** and change to the target device.

In some cases, a resource used by a code example (for example, an IP block) is not supported on another device. In that case the example will not work. If you build the code targeted at such a device, you will get errors. See the device datasheet for information on what a particular device supports.

Related Documents

For a comprehensive list of PSoC 6 MCU resources, see KBA223067 in the Cypress community.

For a comprehensive list of PSoC 3, PSoC 4, and PSoC 5LP resources, see KBA86521 in the Cypress community.

Application Notes	
AN79953 – Getting Started with PSoC® 4	Describes PSoC 4 devices and how to build your first PSoC Creator project
AN47372 – PrISM Technology for LED Dimming	Describes how the PrISM Component works in detail including hardware and timing diagrams
PSoC Creator Component Datasheets	
PrISM	PrISM Component used for precise signal modulation that reduces low frequency flicker
Device Documentation	
PSoC 4 Datasheets	PSoC 4 Technical Reference Manuals
Development Kit Documentation	
CY8CKIT-042 PSoC 4 Pioneer Kit	
PSoC 4 Kits	
Tool Documentation	
PSoC Creator	Look in the **Downloads** tab for Quick Start and User Guides

Document History

Document Title: CE195348 – PrISM

Document Number: 001-95348

Revision	ECN	Orig. of Change	Submission Date	Description of Change
**	6288664	NRSH	08/31/2018	New Code Example

Worldwide Sales and Design Support

Cypress maintains a worldwide network of offices, solution centers, manufacturer's representatives, and distributors. To find the office closest to you, visit us at Cypress Locations.

Products

Arm® Cortex® Microcontrollers	cypress.com/arm
Automotive	cypress.com/automotive
Clocks & Buffers	cypress.com/clocks
Interface	cypress.com/interface
Internet of Things	cypress.com/iot
Memory	cypress.com/memory
Microcontrollers	cypress.com/mcu
PSoC	cypress.com/psoc
Power Management ICs	cypress.com/pmic
Touch Sensing	cypress.com/touch
USB Controllers	cypress.com/usb
Wireless Connectivity	cypress.com/wireless

PSoC® Solutions

PSoC 1 | PSoC 3 | PSoC 4 | PSoC 5LP | PSoC 6 MCU

Cypress Developer Community

Community Forums | Projects | Videos | Blogs | Training | Components

Technical Support

cypress.com/support

All other trademarks or registered trademarks referenced herein are the property of their respective owners.

Cypress Semiconductor
198 Champion Court
San Jose, CA 95134-1709

© Cypress Semiconductor Corporation, 2018. This document is the property of Cypress Semiconductor Corporation and its subsidiaries, including Spansion LLC ("Cypress"). This document, including any software or firmware included or referenced in this document ("Software"), is owned by Cypress under the intellectual property laws and treaties of the United States and other countries worldwide. Cypress reserves all rights under such laws and treaties and does not, except as specifically stated in this paragraph, grant any license under its patents, copyrights, trademarks, or other intellectual property rights. If the Software is not accompanied by a license agreement and you do not otherwise have a written agreement with Cypress governing the use of the Software, then Cypress hereby grants you a personal, non-exclusive, nontransferable license (without the right to sublicense) (1) under its copyright rights in the Software (a) for Software provided in source code form, to modify and reproduce the Software solely for use with Cypress hardware products, only internally within your organization, and (b) to distribute the Software in binary code form externally to end users (either directly or indirectly through resellers and distributors), solely for use on Cypress hardware product units, and (2) under those claims of Cypress's patents that are infringed by the Software (as provided by Cypress, unmodified) to make, use, distribute, and import the Software solely for use with Cypress hardware products. Any other use, reproduction, modification, translation, or compilation of the Software is prohibited.

TO THE EXTENT PERMITTED BY APPLICABLE LAW, CYPRESS MAKES NO WARRANTY OF ANY KIND, EXPRESS OR IMPLIED, WITH REGARD TO THIS DOCUMENT OR ANY SOFTWARE OR ACCOMPANYING HARDWARE, INCLUDING, BUT NOT LIMITED TO, THE IMPLIED WARRANTIES OF MERCHANTABILITY AND FITNESS FOR A PARTICULAR PURPOSE. No computing device can be absolutely secure. Therefore, despite security measures implemented in Cypress hardware or software products, Cypress does not assume any liability arising out of any security breach, such as unauthorized access to or use of a Cypress product. In addition, the products described in these materials may contain design defects or errors known as errata which may cause the product to deviate from published specifications. To the extent permitted by applicable law, Cypress reserves the right to make changes to this document without further notice. Cypress does not assume any liability arising out of the application or use of any product or circuit described in this document. Any information provided in this document, including any sample design information or programming code, is provided only for reference purposes. It is the responsibility of the user of this document to properly design, program, and test the functionality and safety of any application made of this information and any resulting product. Cypress products are not designed, intended, or authorized for use as critical components in systems designed or intended for the operation of weapons, weapons systems, nuclear installations, life-support devices or systems, other medical devices or systems (including resuscitation equipment and surgical implants), pollution control or hazardous substances management, or other uses where the failure of the device or system could cause personal injury, death, or property damage ("Unintended Uses"). A critical component is any component of a device or system whose failure to perform can be reasonably expected to cause the failure of the device or system, or to affect its safety or effectiveness. Cypress is not liable, in whole or in part, and you shall and hereby do release Cypress from any claim, damage, or other liability arising from or related to all Unintended Uses of Cypress products. You shall indemnify and hold Cypress harmless from and against all claims, costs, damages, and other liabilities, including claims for personal injury or death, arising from or related to any Unintended Uses of Cypress products.

Cypress, the Cypress logo, Spansion, the Spansion logo, and combinations thereof, WICED, PSoC, CapSense, EZ-USB, F-RAM, and Traveo are trademarks or registered trademarks of Cypress in the United States and other countries. For a more complete list of Cypress trademarks, visit cypress.com. Other names and brands may be claimed as property of their respective owners.