CE195321 – Hibernate and Stop Power Modes with PSoC 4

Objective

This code example demonstrates how to enter and wake up from Hibernate and Stop low-power modes with PSoC® 4.

Overview

This code example uses the CY_Boot Component API to enter Hibernate and Stop power modes. To exit Hibernate mode, this code example uses Pin and Comparator interrupts; to exit Stop mode, a dedicated wakeup pin is used. Power modes are indicated by the kit's RGB LED.

Requirements

Tool: PSoC Creator™ 4.1 Update 1

Programming Language: C (Arm® GCC 5.4.1 and Arm MDK 5.22)

Associated Parts: PSoC 4100, PSoC 4200, PSoC 4100 BLE, PSoC 4200 BLE, PSoC 4100M, PSoC 4200M, PSoC 4200L

Related Hardware: CY8CKIT-042, CY8CKIT-042-BLE, CY8CKIT-042-BLE-A, CY8CKIT-044, CY8CKIT-046

Hardware Setup

This example project by default is configured to run on the CY8CKIT-042 development kit from Cypress Semiconductor. The project can be migrated to any supported kit by changing the target device with **Device Selector** called from the project's context menu. Table 1 lists the supported kits and corresponding devices.

Table 1. Supported Kits and Devices

Development Kit	Series	Device
CY8CKIT-042	PSoC 4200	CY8C4245AXI-483
CY8CKIT-042-BLE	PSoC 4200 BLE	CY8C4247LQI-BL483
CY8CKIT-042-BLE-A	PSoC 4200 BLE	CY8C4248LQI-BL483
CY8CKIT-044	PSoC 4200M	CY8C4247AZI-M485
CY8CKIT-046	PSoC 4200L	CY8C4248BZI-L489

This example requires Voltage Select jumper set in 5 Volt mode. To use the Low Power Comparator Component as the wakeup source, you will need a potentiometer or other variable voltage source in range 0 - 5 V. Potentiometer and voltage reference connections are described in the Operation section.

Pin assignments for the supported kits are provided in Table 2. For all supported kits, the project includes control files to automatically assign pins with respect to the kit hardware connections during the project build. To change pin assignments, override the control file selections in the **Pin Editor** of the **Design Wide Resources** by selecting the new port or pin number.

Table 2. Pin Assignments

Development Kit	Pin Assignment					
	Pin_Wakeup	Comp_NonInv	Comp_Inv	LED_Active	LED_Hibernate	LED_Stop
CY8CKIT-042	P0[7]	P0[0]	P0[1]	P1[6]	P0[2]	P0[3]
CY8CKIT-042-BLE	P2[2]			P2[6]	P3[6]	P3[7]
CY8CKIT-042-BLE-A						
CY8CKIT-044	P0[7]			P0[6]	P2[6]	P6[5]
CY8CKIT-046	P0[7]			P5[2]	P5[3]	P5[4]

Software Setup

None.

Operation

1. Plug your kit board into your computer's USB port.
2. Build the project and program it into the PSoC 4 device. Choose **Debug** > **Program**. For more information on device programming, see the PSoC Creator Help.
3. Observe the red color of RGB LED indicating that PSoC 4 is currently in Active mode.
4. Make the connections to the inputs of the Low Power Comparator Component (Figure 1):
   - Connect the potentiometer between the 5V, GND and Comp_NonInv pin (P0[0]);
   - Connect Comp_Inv pin (P0[1]) to kit's 3.3-V output.

   You can use other input voltage source and voltage reference in the 0 – 5 V range.

Figure 1. Comparator's Inputs Connections

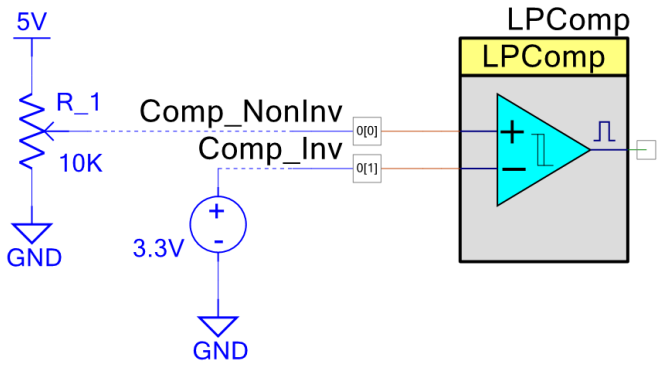

5. Enter Hibernate mode by a short press (less than 1 second) of the kit's user button SW2. Observe the RGB LED green color blink once to confirm mode change.

Note: For CY8CKIT-042-BLE and CY8CKIT-042-BLE-A, the user button SW2 is not connected to the dedicated wakeup pin. To control device power modes, connect the external button between P2[2] pin and the ground terminal.

6. Wake up PSoC 4 by pressing the kit's user button or with the low-power comparator. If you use the comparator, turn the potentiometer knob to change the voltage value on Comp_NonInv input to cross the reference voltage value on the Comp_Inv input. Observe the red color of the RGB LED indicating new power mode (Active).
7. Enter Stop mode by pressing the kit's user button for longer than 1 second. Observe the RGB LED blue color blink once to confirm mode change.
8. Wake up PSoC 4 using the kit's user button. Observe the red color of the RGB LED.

Design and Implementation

This example project consists of the Digital Input Pin, Low Power Comparator, Interrupts, Global Signal Reference, and Digital Output Pin Components. The Top Design Schematic for this code example is shown in Figure 2.

Figure 2. Top Design Schematic

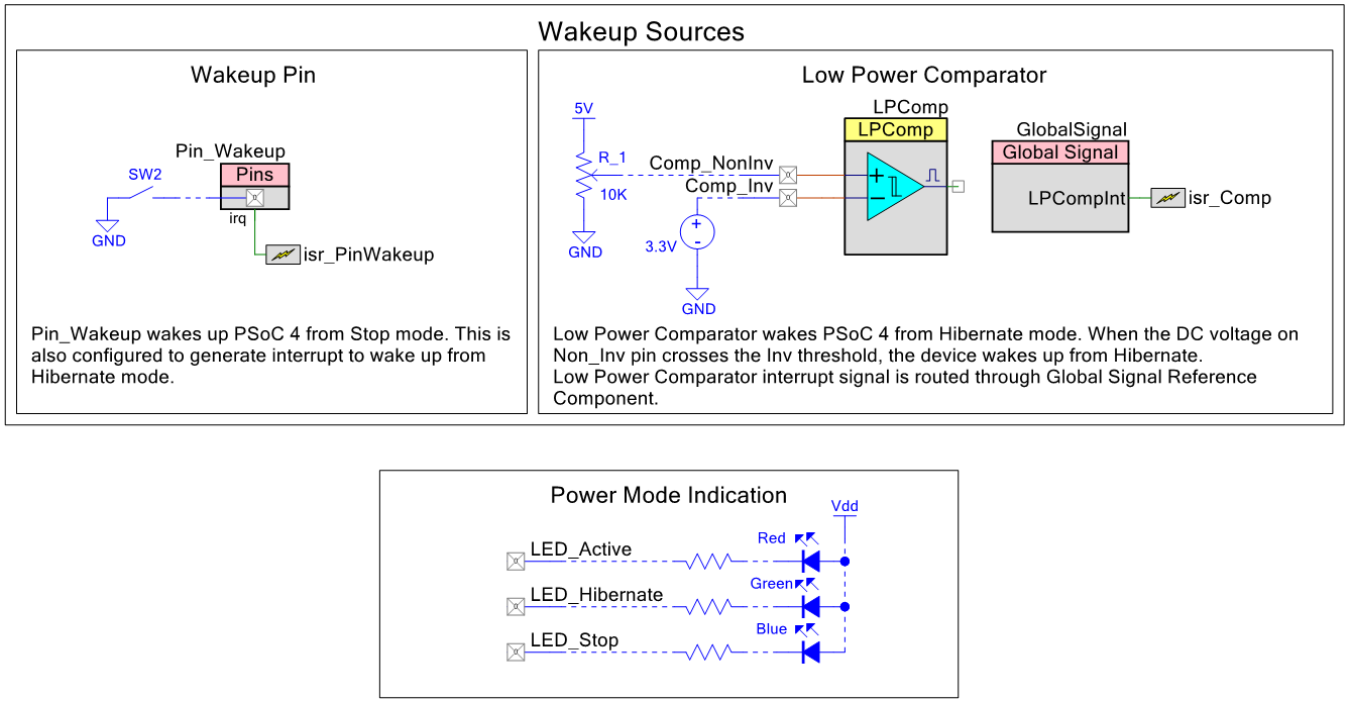

The Pin_Wakeup is connected to the kit's user button and is used to change the current power mode: on a short press, the device enters Hibernate mode; on a longer than 1 second press, the device enters Stop mode. Pin_Wakeup is also used to wake up the device from both low-power modes. To wake up the device from Stop mode, Pin_Wakeup is assigned to the dedicated Wakeup pin of the PSoC 4 device. To wake up the device from Hibernate mode, Pin_Wakeup and Low Power Comparator interrupts are used.

Power modes are indicated by the kit's RGB LED which is red in Active mode and blinks once before entering low-power modes: green for Hibernate and blue for Stop mode. In both low-power modes, the RGB LED is disabled; therefore, you can use an ammeter to measure the current consumption of the PSoC 4 device.

To enter low-power modes, the `CySysPmHibernate()` and `CySysPmStop()` API functions are used. Wakeup from these modes causes a device reset.

The `CySysPmStop()` function configures the device for Stop mode including freezing the states of the I/O pins. After a wakeup reset, the GPIO states remains frozen and must be unfrozen using the `CySysPmUnfreezeIo()` function before pin states can be changed. For more information about low-power modes, see AN86233 – PsoC 4 Low-Power Modes and Power Reduction Techniques.

The firmware does the following:

- Initializes interrupts and Components
- Measures the button-press time
- Indicates the new power mode with the RGB LED and enters it according to the button-press time

Components and Settings

Table 3 lists the PSoC Creator Components used in this example, how they are used in the design, and the non-default settings required so they function as intended.

Table 3. PSoC Creator Components

Component	Instance Name	Purpose	Non-default Settings
Digital Input Pin	Pin_Wakeup	Generates interrupts and wakes up the device from Stop mode	See Figure 3 and Figure 4
Analog Pin	Comp_NonInv	Analog inputs of the Low Power Comparator	Default settings only
	Comp_Inv		
Low Power Comparator	LPComp	Generates interrupts at input voltage changes	See Figure 5
Interrupt	Isr_PinWakeup	Wake up the device from Hibernate mode	Default settings only
	Isr_Comp		
Global Signal Reference	GlobalSignal	Provides connection between Low Power Comparator and Interrupt Components	Global signal name: Combined low-power comparator interrupt (LPCompInt)
Digital Output Pin	LED_Active	Drives the RGB LED to provide visual feedback	HW Connection: OFF
	LED_Hibernate		
	LED_Stop		

For information on the hardware resources used by a Component, see the Component datasheet.

Figure 3 and Figure 4 highlight the non-default settings for the Digital Input Pin Component used as Pin_Wakeup.

Figure 3. Digital Input Pin Component Settings: General Tab

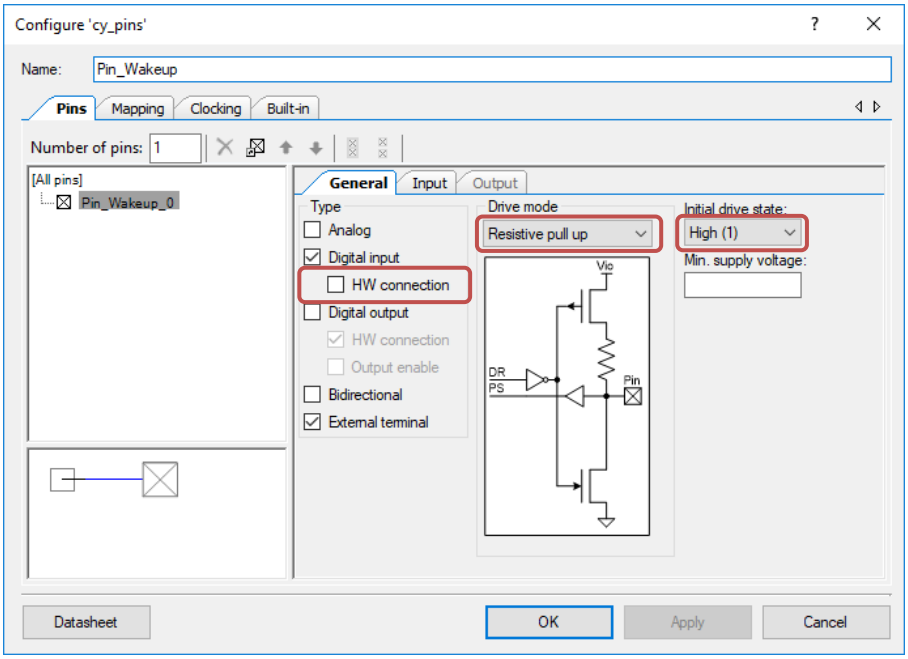

Figure 4. Digital Input Pin Component Settings: Input Tab

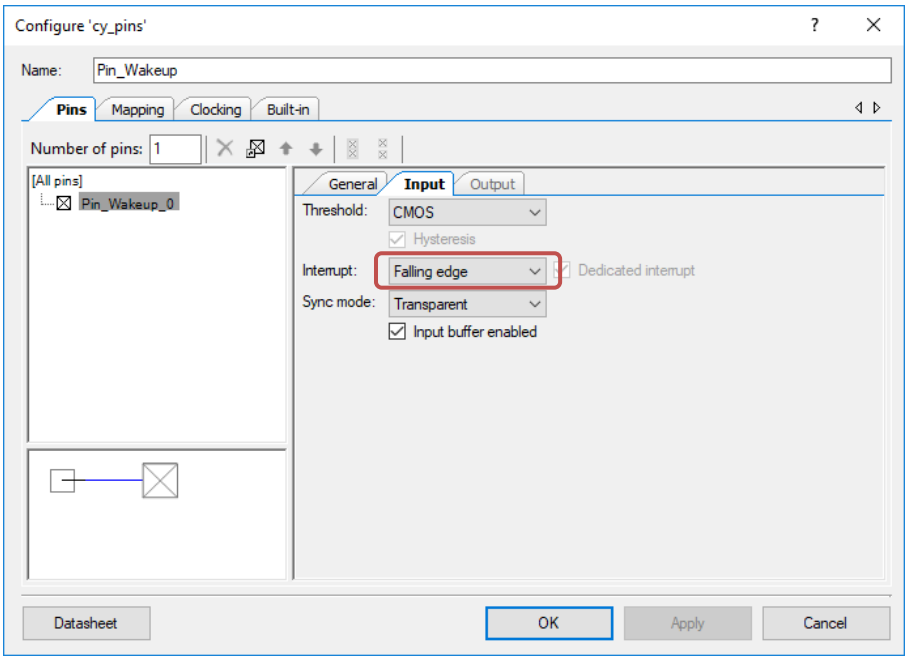

Figure 5 highlights the non-default settings for the Low Power Comparator Component.

Figure 5. Low Power Comparator Component Settings

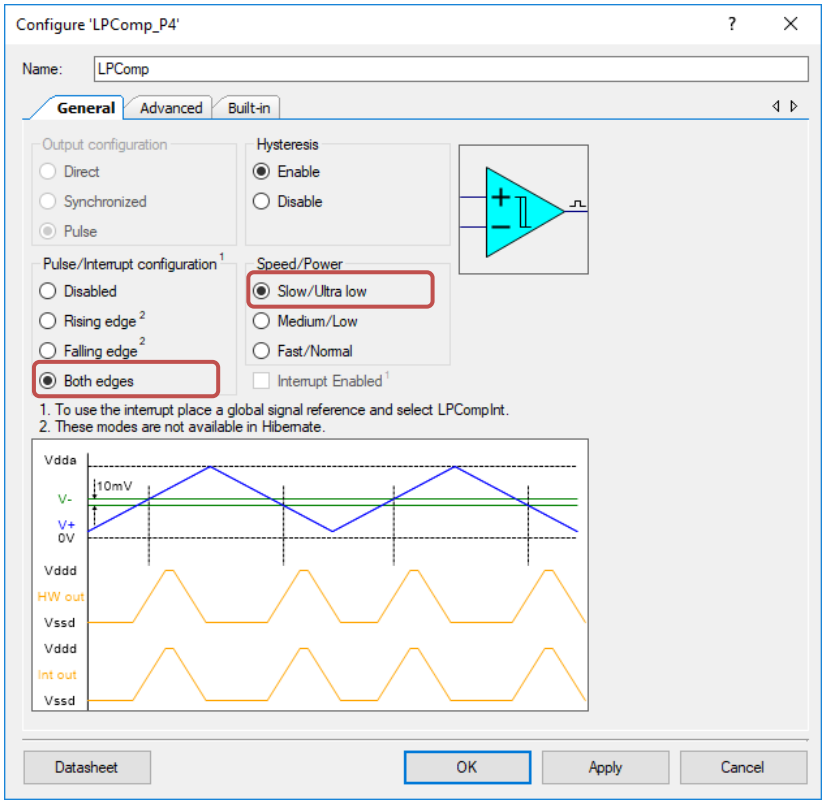

Reusing This Example

This example is designed for PSoC 4 devices that support Hibernate and Stop power modes. To port the design to a different PSoC 4 device with these power modes or different hardware, change the target device using **Device Selector** and update the pin assignments in the **Design Wide Resources Pins** settings as needed.

Related Documents

Application Notes	
AN79953 – Getting Started with PSoC 4	Introduces the PSoC 4 architecture and development tools.
AN86233 – PsoC 4 Low-Power Modes and Power Reduction Techniques	Shows how to use the PSoC 4 low-power modes and features
PSoC Creator Component Datasheets	
Pins	Supports connection of hardware resources to physical pins
Low Power Comparator	Supports low power comparators
Global Signal Reference	Supports access to device specific, device level global signals
Interrupt	Supports generating interrupts from hardware signals
System Reference Guide (CY_Boot Component)	Supports system functionality for a project and give access to chip resources
Device Documentation	
PSoC 4 Datasheets	PSoC 4 Technical Reference Manuals
Development Kit Documentation	
PSoC 4 Kits	

Document History

Document Title: CE195321 – Hibernate and Stop Power Modes with PSoC 4

Document Number: 001-95321

Revision	ECN	Orig. of Change	Submission Date	Description of Change
**	6003614	MYKZTMP1	01/18/2018	New code example

Worldwide Sales and Design Support

Cypress maintains a worldwide network of offices, solution centers, manufacturer's representatives, and distributors. To find the office closest to you, visit us at Cypress Locations.

Products

Arm® Cortex® Microcontrollers	cypress.com/arm
Automotive	cypress.com/automotive
Clocks & Buffers	cypress.com/clocks
Interface	cypress.com/interface
Internet of Things	cypress.com/iot
Memory	cypress.com/memory
Microcontrollers	cypress.com/mcu
PSoC	cypress.com/psoc
Power Management ICs	cypress.com/pmic
Touch Sensing	cypress.com/touch
USB Controllers	cypress.com/usb
Wireless Connectivity	cypress.com/wireless

PSoC® Solutions

PSoC 1 | PSoC 3 | PSoC 4 | PSoC 5LP | PSoC 6 MCU

Cypress Developer Community

Community Forums | Projects | Videos | Blogs | Training | Components

Technical Support

cypress.com/support

All other trademarks or registered trademarks referenced herein are the property of their respective owners.

Cypress Semiconductor
198 Champion Court
San Jose, CA 95134-1709

© Cypress Semiconductor Corporation, 2018. This document is the property of Cypress Semiconductor Corporation and its subsidiaries, including Spansion LLC ("Cypress"). This document, including any software or firmware included or referenced in this document ("Software"), is owned by Cypress under the intellectual property laws and treaties of the United States and other countries worldwide. Cypress reserves all rights under such laws and treaties and does not, except as specifically stated in this paragraph, grant any license under its patents, copyrights, trademarks, or other intellectual property rights. If the Software is not accompanied by a license agreement and you do not otherwise have a written agreement with Cypress governing the use of the Software, then Cypress hereby grants you a personal, non-exclusive, nontransferable license (without the right to sublicense) (1) under its copyright rights in the Software (a) for Software provided in source code form, to modify and reproduce the Software solely for use with Cypress hardware products, only internally within your organization, and (b) to distribute the Software in binary code form externally to end users (either directly or indirectly through resellers and distributors), solely for use on Cypress hardware product units, and (2) under those claims of Cypress's patents that are infringed by the Software (as provided by Cypress, unmodified) to make, use, distribute, and import the Software solely for use with Cypress hardware products. Any other use, reproduction, modification, translation, or compilation of the Software is prohibited.

TO THE EXTENT PERMITTED BY APPLICABLE LAW, CYPRESS MAKES NO WARRANTY OF ANY KIND, EXPRESS OR IMPLIED, WITH REGARD TO THIS DOCUMENT OR ANY SOFTWARE OR ACCOMPANYING HARDWARE, INCLUDING, BUT NOT LIMITED TO, THE IMPLIED WARRANTIES OF MERCHANTABILITY AND FITNESS FOR A PARTICULAR PURPOSE. No computing device can be absolutely secure. Therefore, despite security measures implemented in Cypress hardware or software products, Cypress does not assume any liability arising out of any security breach, such as unauthorized access to or use of a Cypress product. In addition, the products described in these materials may contain design defects or errors known as errata which may cause the product to deviate from published specifications. To the extent permitted by applicable law, Cypress reserves the right to make changes to this document without further notice. Cypress does not assume any liability arising out of the application or use of any product or circuit described in this document. Any information provided in this document, including any sample design information or programming code, is provided only for reference purposes. It is the responsibility of the user of this document to properly design, program, and test the functionality and safety of any application made of this information and any resulting product. Cypress products are not designed, intended, or authorized for use as critical components in systems designed or intended for the operation of weapons, weapons systems, nuclear installations, life-support devices or systems, other medical devices or systems (including resuscitation equipment and surgical implants), pollution control or hazardous substances management, or other uses where the failure of the device or system could cause personal injury, death, or property damage ("Unintended Uses"). A critical component is any component of a device or system whose failure to perform can be reasonably expected to cause the failure of the device or system, or to affect its safety or effectiveness. Cypress is not liable, in whole or in part, and you shall and hereby do release Cypress from any claim, damage, or other liability arising from or related to all Unintended Uses of Cypress products. You shall indemnify and hold Cypress harmless from and against all claims, costs, damages, and other liabilities, including claims for personal injury or death, arising from or related to any Unintended Uses of Cypress products.

Cypress, the Cypress logo, Spansion, the Spansion logo, and combinations thereof, WICED, PSoC, CapSense, EZ-USB, F-RAM, and Traveo are trademarks or registered trademarks of Cypress in the United States and other countries. For a more complete list of Cypress trademarks, visit cypress.com. Other names and brands may be claimed as property of their respective owners.