Please note that Cypress is an Infineon Technologies Company.
The document following this cover page is marked as “Cypress” document as this is the company that originally developed the product. Please note that Infineon will continue to offer the product to new and existing customers as part of the Infineon product portfolio.

Continuity of document content
The fact that Infineon offers the following product as part of the Infineon product portfolio does not lead to any changes to this document. Future revisions will occur when appropriate, and any changes will be set out on the document history page.

Continuity of ordering part numbers
Infineon continues to support existing part numbers. Please continue to use the ordering part numbers listed in the datasheet for ordering.

CE195291 – Character LCD Horizontal Bar Graph with PSoC 3, PSoC 4, and PSoC 5LP

Objective

This code example shows how to use the Character LCD with the Component Horizontal Bar Graph feature.

Overview

This example uses the Character LCD Component API to display a horizontal bar graph on the 16x02 character LCD with Hitachi 44780 4-bit interface.

Requirements

Tool: PSoC® Creator 4.1 Update 1

Programming Language: C (GCC 5.4-2016-q2-update, Arm® MDK 5.06 update 5 for PSoC 4 and PSoC 5LP; DP8051 Keil 9.51 for PSoC 3)

Associated Parts: all PSoC 3, PSoC 4 and PSoC 5LP parts

Related Hardware: CY8CKIT-001, CY8CKIT-038, CY8CKIT-030, CY8CKIT-050

Hardware Setup

This example uses the kit's default configuration. Refer to the kit guide to ensure the kit is configured correctly.

This example is designed for the development kits from Cypress Semiconductor, shown in Table 1. By default, example project has selected device for CY8CKIT-030 and CY8CKIT-001 with the CY8C38 module. To switch from this kits to any other supported kit, change the project's device with the **Device Selector** called from the project's context menu.

Note: For Cypress kits, you can quickly select the target device. In **Device Selector**, right-click anywhere in the table area and select **Select Default Device**, then pick your kit's device series. For the series name, refer to Table 1.

Table 1 lists the supported kits, corresponding devices, and pin assignments.

Table 1. Supported Kits, Devices, Pin Assignments

Development Kit	Series	Device	Pin Assignments
			\LCD:LCDport[6:0]\
CY8CKIT-001	PSoC 3 (with CY8C38 module)	CY8C3866AXI-040	P2[6:0]
	PSoC 4200 (with CY8CKIT-038 module)	CY8C4245AXI-483	
	CY8C58LP (with CY8C58LP module)	CY8C5868AXI-LP035	
CY8CKIT-030	CY8C38	CY8C3866AXI-040	
CY8CKIT-050	CY8C58LP	CY8C5868AXI-LP035	

Note: For all supported kits, the project includes control files to automatically assign pins with respect to the kit hardware connections during the project build. To change pin assignments, override the control file selections in the Pin Editor of the Design Wide Resources by selecting the new port or pin number.

Software Setup

None.

Operation

1. Plug the kit board programming port to your computer's USB port.

Note: For CY8CKIT-001 power-up the kit with the power supply adapter and for programming, use MiniProg3. For more information about this kit, refer to CY8CKIT-001 PSoC Development Kit Guide.

2. Build the project and program it into the PSoC device. Choose **Debug** > **Program**. For more information on device programming, see PSoC Creator Help.
3. Observe the demo of the horizontal bar graph.

   At the start, the LCD shows the "Demo started" message. Then, for each row, the LCD displays bar graphs from left to right from the initial position moving towards right. After each graph, the display is cleared and the initial position moves to the right by one character. After completing the demo, the LCD will display the "Demo completed" message.

Note: The demo is shown only one time after a device reset. To observe the demo again, press the kit's **Reset** button.

Design and Implementation

The Top Design Schematic for this code example is in Figure 1.

Figure 1. Top Design Schematic

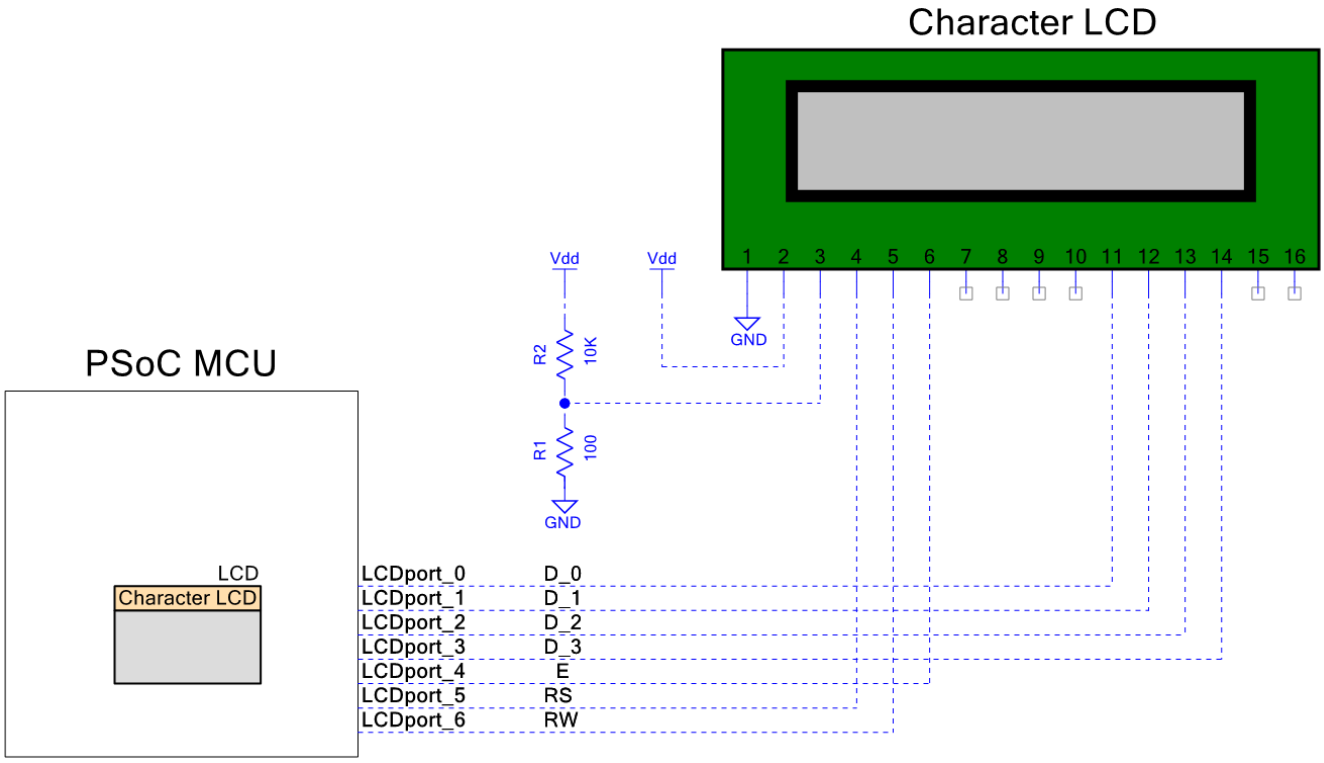

The Top Design consists of the Character LCD Component which contains a set of library routines. The routines enable the simple use of one, two, or four-line LCD modules that follow Hitachi 44780 standard 4-bit interface. This Component provides APIs to implement horizontal and vertical bar graphs, or create and display your own custom characters. The horizontal bar graph API provides the ability to draw a bar graph from any cursor position with the desired length.

This code example firmware initializes the LCD and draws a bar graph demo which consists of the start message, bar graph displaying, and the end message.

Components and Settings

Table 2 lists the PSoC Creator Components used in this example, how they are used in the design, and the non-default settings required for their proper functioning.

Table 2. PSoC Creator Components

Component	Instance Name	Purpose	Non-default Settings
Character LCD	LCD	Shows messages and bar graphs on a character LCD.	LCD Custom Character Set – Horizontal Bargraph

For information on the hardware resources used by the Component, refer to the Component datasheet.

Reusing This Example

This example may be used with Hitachi 44780 – compatible displays with a different number of rows or columns. To adapt this demo to other displays, change the `LCD_ROWS` and `LCD_COLUMNS` macro in the *main.c* file.

This example may also be used with any PSoC 3, PSoC 4 or PSoC 5LP hardware with a character LCD that supports Hitachi 44780 standard 4-bit interface. To port the design to a different device and/or kit, change the target device using the Device Selector and update the pin assignments in the Design Wide Resources Pins settings as needed.

Related Documents

Application Notes	
AN54181 – Getting Started with PSoC 3	Introduces the PSoC 3 architecture and development tools
AN79953 – Getting Started with PSoC 4	Introduces the PSoC 4 architecture and development tools
AN77759 – Getting Started with PSoC 5LP	Introduces the PSoC 5LP architecture and development tools
PSoC Creator Component Datasheets	
Character LCD	Implements the industry standard Hitachi HD44780 LCD display driver chip protocol
Device Documentation	
PSoC 3 Family Datasheets	PSoC 3 Architecture Technical Reference Manual
PSoC 4 Family Datasheets	PSoC 4 Architecture Technical Reference Manual
PSoC 5LP Family Datasheets	PSoC 5LP Architecture Technical Reference Manual
Development Kit Documentation	
CY8CKIT-001 PSoC Development Kit	
CY8CKIT-030 PSoC 3 Development Kit	
CY8CKIT-050 PSoC 5LP Development Kit	

Document History

Document Title: CE195291 – Character LCD Horizontal Bar Graph with PSoC 3, PSoC 4, and PSoC 5LP

Document Number: 001-95291

Revision	ECN	Orig. of Change	Submission Date	Description of Change
**	5955031	MYKZTMP1	12/01/2017	New code example

Worldwide Sales and Design Support

Cypress maintains a worldwide network of offices, solution centers, manufacturer's representatives, and distributors. To find the office closest to you, visit us at Cypress Locations.

Products

Arm® Cortex® Microcontrollers	cypress.com/arm
Automotive	cypress.com/automotive
Clocks & Buffers	cypress.com/clocks
Interface	cypress.com/interface
Internet of Things	cypress.com/iot
Memory	cypress.com/memory
Microcontrollers	cypress.com/mcu
PSoC	cypress.com/psoc
Power Management ICs	cypress.com/pmic
Touch Sensing	cypress.com/touch
USB Controllers	cypress.com/usb
Wireless Connectivity	cypress.com/wireless

PSoC® Solutions

PSoC 1 | PSoC 3 | PSoC 4 | PSoC 5LP | PSoC 6 MCU

Cypress Developer Community

Community Forums | Projects | Videos | Blogs | Training | Components

Technical Support

cypress.com/support

All other trademarks or registered trademarks referenced herein are the property of their respective owners.

Cypress Semiconductor
198 Champion Court
San Jose, CA 95134-1709

© Cypress Semiconductor Corporation, 2017. This document is the property of Cypress Semiconductor Corporation and its subsidiaries, including Spansion LLC ("Cypress"). This document, including any software or firmware included or referenced in this document ("Software"), is owned by Cypress under the intellectual property laws and treaties of the United States and other countries worldwide. Cypress reserves all rights under such laws and treaties and does not, except as specifically stated in this paragraph, grant any license under its patents, copyrights, trademarks, or other intellectual property rights. If the Software is not accompanied by a license agreement and you do not otherwise have a written agreement with Cypress governing the use of the Software, then Cypress hereby grants you a personal, non-exclusive, nontransferable license (without the right to sublicense) (1) under its copyright rights in the Software (a) for Software provided in source code form, to modify and reproduce the Software solely for use with Cypress hardware products, only internally within your organization, and (b) to distribute the Software in binary code form externally to end users (either directly or indirectly through resellers and distributors), solely for use on Cypress hardware product units, and (2) under those claims of Cypress's patents that are infringed by the Software (as provided by Cypress, unmodified) to make, use, distribute, and import the Software solely for use with Cypress hardware products. Any other use, reproduction, modification, translation, or compilation of the Software is prohibited.

TO THE EXTENT PERMITTED BY APPLICABLE LAW, CYPRESS MAKES NO WARRANTY OF ANY KIND, EXPRESS OR IMPLIED, WITH REGARD TO THIS DOCUMENT OR ANY SOFTWARE OR ACCOMPANYING HARDWARE, INCLUDING, BUT NOT LIMITED TO, THE IMPLIED WARRANTIES OF MERCHANTABILITY AND FITNESS FOR A PARTICULAR PURPOSE. To the extent permitted by applicable law, Cypress reserves the right to make changes to this document without further notice. Cypress does not assume any liability arising out of the application or use of any product or circuit described in this document. Any information provided in this document, including any sample design information or programming code, is provided only for reference purposes. It is the responsibility of the user of this document to properly design, program, and test the functionality and safety of any application made of this information and any resulting product. Cypress products are not designed, intended, or authorized for use as critical components in systems designed or intended for the operation of weapons, weapons systems, nuclear installations, life-support devices or systems, other medical devices or systems (including resuscitation equipment and surgical implants), pollution control or hazardous substances management, or other uses where the failure of the device or system could cause personal injury, death, or property damage ("Unintended Uses"). A critical component is any component of a device or system whose failure to perform can be reasonably expected to cause the failure of the device or system, or to affect its safety or effectiveness. Cypress is not liable, in whole or in part, and you shall and hereby do release Cypress from any claim, damage, or other liability arising from or related to all Unintended Uses of Cypress products. You shall indemnify and hold Cypress harmless from and against all claims, costs, damages, and other liabilities, including claims for personal injury or death, arising from or related to any Unintended Uses of Cypress products.

Cypress, the Cypress logo, Spansion, the Spansion logo, and combinations thereof, WICED, PSoC, CapSense, EZ-USB, F-RAM, and Traveo are trademarks or registered trademarks of Cypress in the United States and other countries. For a more complete list of Cypress trademarks, visit cypress.com. Other names and brands may be claimed as property of their respective owners.