Please note that Cypress is an Infineon Technologies Company.
The document following this cover page is marked as “Cypress” document as this is the company that originally developed the product. Please note that Infineon will continue to offer the product to new and existing customers as part of the Infineon product portfolio.

Continuity of document content
The fact that Infineon offers the following product as part of the Infineon product portfolio does not lead to any changes to this document. Future revisions will occur when appropriate, and any changes will be set out on the document history page.

Continuity of ordering part numbers
Infineon continues to support existing part numbers. Please continue to use the ordering part numbers listed in the datasheet for ordering.

CE195271 – PSoC 3/PSoC 5LP Delta Sigma ADC in Differential Mode

Objective

This code example demonstrates how to use the Delta Sigma ADC in Differential mode.

Overview

The ADC measures the differential voltage between two voltage sources – an external variable resistor and an internal voltage source. The measurement results are displayed on the LCD.

Requirements

Tool: PSoC Creator 4.1™ Update 1

Programming Language: C (Arm® GCC 5.4-2016-q2-update for PSoC® 5LP or DP8051 Keil 9.51 for PSoC 3)

Associated Parts: All PSoC 3 and PSoC 5LP parts

Related Hardware: CY8CKIT-030, CY8CKIT-050

Design

The design in Figure 1 consists of the Delta Sigma ADC and Voltage DAC (VDAC8) Components. The Delta Sigma ADC measures the differential voltage between Pin_ADC_In and VDAC8. Pin_ADC_In is connected to the positive input of the ADC. VDAC8 is configured to generate a constant voltage of 2 V on the ADC's negative input. The Character LCD Component shows the value of the measured voltage of the ADC. The pin LED drives the onboard LED and indicates that the code example works.

Figure 1. Delta Sigma ADC Code Example Schematic

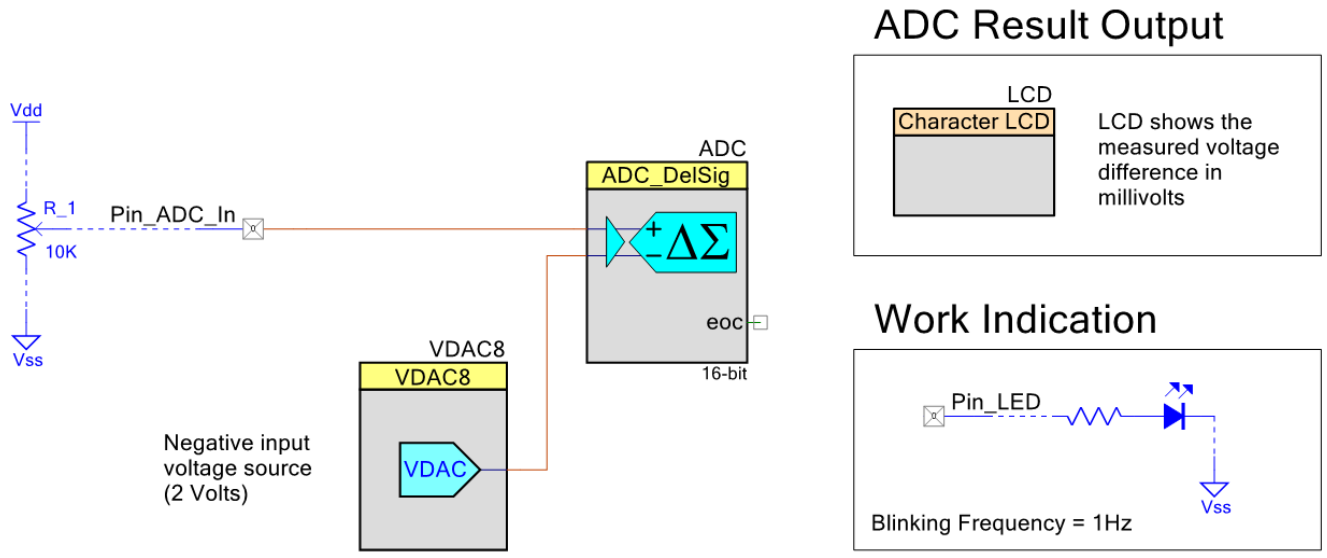

The firmware:

- Initializes VDAC8, ADC, and LCD
- Starts ADC conversion
- Gets converted results
- Shows the results on the LCD
- Toggles the LED state

Design Considerations

This code example is designed to run on CY8CKIT-030 with PSoC 3 and CY8CKIT-050 with PSoC 5LP. These kits have an onboard variable resistor to generate external voltage and an LCD to display measured values. For these kits, the project includes control files to automatically assign pins during the project build. To change the pin selection, over-ride the control file selections in the Pin Editor of the Design Wide Resources by selecting the new port or pin number.

This example is easily adapted to work with CY8CKIT-001 with the PSoC 3 or PSoC 5 processor module. To start, in Design Wide Resources Pin Editor, re-assign Pin_ADC_In and Pin_LED to any of the Port 0 or Port 1 pins and connect them with jumper wires to the onboard variable resistor and LED pins accordingly. The CY8CKIT-001 uses the same LCD connection as CY8CKIT-030 and CY8CKIT-050 – Port 2[6:0]. For details, see the CY8CKIT-001 PSoC Development Kit Guide.

The design can also be adapted to work with any PSoC 3 or PSoC 5LP system that provides a variable voltage source. The LCD can be replaced with a communication port such a UART and SPI.

Hardware Setup

This example uses the kit's default configuration. For more information, see the kit guide.

This example project is designed to run on the CY8CKIT-030 kit. To switch from CY8CKIT-030 to any other kit, go to the **Project** > **Device selector** and choose the target device of your development kit.

Table 1 lists the supported kits, devices, and pin assignments.

Table 1. Supported Kits, Devices, and Pin Assignments

Kit	Device	Pin Assignments		
		Pin_ADC_In	\LCD:LCDPort[6:0]\	Pin_LED
CY8CKIT-030	CY8C3866AXI-040	P6[5]	P2[6:0]	P6[3]
CY8CKIT-050	CY8C5868AXI-LP035	P6[5]	P2[6:0]	P6[3]

Note: For all supported kits, code example includes control files to automatically assign pins during the project build. To change the pin selection, over-ride the control file selections in the Pin Editor of the Design Wide Resources.

Operation

1. Plug the CY8CKIT-030 or CY8CKIT-050 kit board into your computer's USB port.
2. Build the project and program it into the PSoC 3 or PSoC 5LP device. Choose **Debug** > **Program**. For more information about device programming, see the PSoC Creator Help.
3. Vary the input voltage by using the variable resistor and observe a digital value on the LCD. If the input voltage is 0 V, the displayed value will be equal to -2 V. If the input voltage is 2 V, the displayed value will be equal to 0 V.
4. Confirm that the kit's LED is blinking.

The following sections describe the components (parameter settings) and resources used to make this example.

Components

Table 2 lists the PSoC Creator components used in this example, the hardware resources used by each component and its non-default parameter settings.

Table 2. PSoC Creator Components and Parameters

Component	Instance Name	Hardware Resources	Non-default Parameter settings
Delta Sigma ADC	ADC_DelSig	1 Delta-Sigma ADC 1 Interrupt	See Parameter Settings
Voltage DAC	VDAC8	1 VIDAC	Range: 0 – 4.080 V (16 mV/bit) Value: 2000 mV
Analog Pin	Pin_ADC_In	1 pin	None
Output system			
Character LCD	LCD	7 pins	None
Digital Output Pin	Pin_LED	1 pin	HW Connection: OFF

Parameter Settings

Figure 2 shows the Delta Sigma ADC Component configuration with the non-default settings highlighted.

Figure 2. Delta Sigma ADC Component Customizer Settings

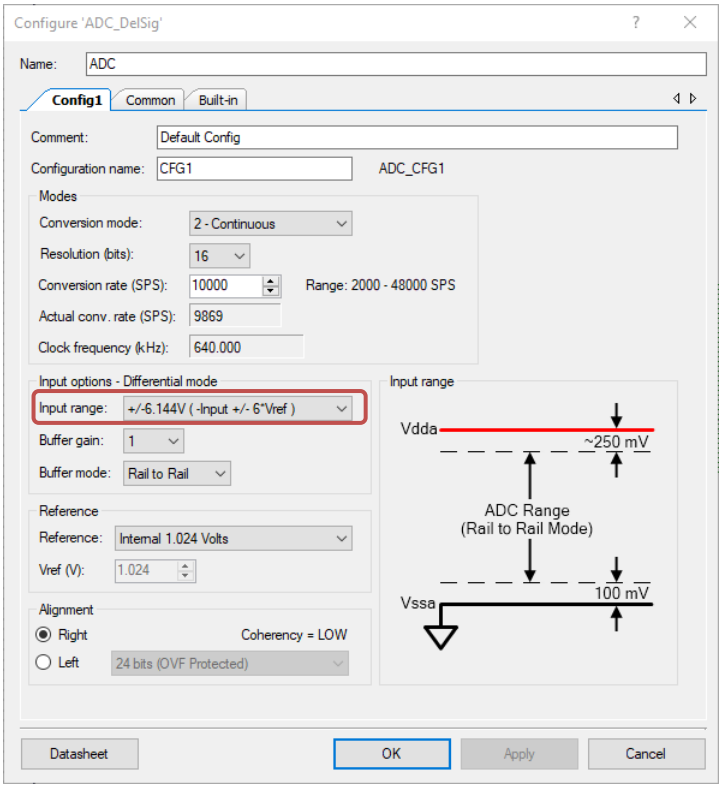

Related Documents

Application Notes	
AN54181 Getting Started with PSoC 3	Describes the PSoC 3, and how to build this code example.
AN77759 Getting Started with PSoC 5LP	Describes the PSoC 5LP, and how to build this code example.
PSoC Creator Component Datasheets	
Delta Sigma ADC	Supports Delta Sigma Analog to Digital Converter
Pins	Supports connection of hardware resources to physical pins
Voltage DAC	Supports 8-Bit Voltage Digital to Analog Converter
Character LCD	Supports Character LCD with Hitachi 44780 standard 4-bit interface
Device Documentation	
PSoC 3 Datasheets	PSoC 3 Technical Reference Manuals
PSoC 5LP Datasheets	PSoC 5LP Technical Reference Manuals
Development Kit (DVK) Documentation	
CY8CKIT-030	
CY8CKIT-050	
CY8CKIT-001	

Document History

Document Title: CE195271 – PSoC 3/PSoC 5LP Delta Sigma ADC in Differential Mode

Document Number: 001-95271

Revision	ECN	Orig. of Change	Submission Date	Description of Change
**	5891446	MYKZTMP1	10/27/17	New code example

Worldwide Sales and Design Support

Cypress maintains a worldwide network of offices, solution centers, manufacturer's representatives, and distributors. To find the office closest to you, visit us at Cypress Locations.

Products

ARM® Cortex® Microcontrollers	cypress.com/arm
Automotive	cypress.com/automotive
Clocks & Buffers	cypress.com/clocks
Interface	cypress.com/interface
Internet of Things	cypress.com/iot
Memory	cypress.com/memory
Microcontrollers	cypress.com/mcu
PSoC	cypress.com/psoc
Power Management ICs	cypress.com/pmic
Touch Sensing	cypress.com/touch
USB Controllers	cypress.com/usb
Wireless Connectivity	cypress.com/wireless

PSoC® Solutions

PSoC 1 | PSoC 3 | PSoC 4 | PSoC 5LP | PSoC 6

Cypress Developer Community

Forums | WICED IOT Forums | Projects | Videos | Blogs | Training | Components

Technical Support

cypress.com/support

All other trademarks or registered trademarks referenced herein are the property of their respective owners.

Cypress Semiconductor
198 Champion Court
San Jose, CA 95134-1709

© Cypress Semiconductor Corporation, 2017. This document is the property of Cypress Semiconductor Corporation and its subsidiaries, including Spansion LLC ("Cypress"). This document, including any software or firmware included or referenced in this document ("Software"), is owned by Cypress under the intellectual property laws and treaties of the United States and other countries worldwide. Cypress reserves all rights under such laws and treaties and does not, except as specifically stated in this paragraph, grant any license under its patents, copyrights, trademarks, or other intellectual property rights. If the Software is not accompanied by a license agreement and you do not otherwise have a written agreement with Cypress governing the use of the Software, then Cypress hereby grants you a personal, non-exclusive, nontransferable license (without the right to sublicense) (1) under its copyright rights in the Software (a) for Software provided in source code form, to modify and reproduce the Software solely for use with Cypress hardware products, only internally within your organization, and (b) to distribute the Software in binary code form externally to end users (either directly or indirectly through resellers and distributors), solely for use on Cypress hardware product units, and (2) under those claims of Cypress's patents that are infringed by the Software (as provided by Cypress, unmodified) to make, use, distribute, and import the Software solely for use with Cypress hardware products. Any other use, reproduction, modification, translation, or compilation of the Software is prohibited.

TO THE EXTENT PERMITTED BY APPLICABLE LAW, CYPRESS MAKES NO WARRANTY OF ANY KIND, EXPRESS OR IMPLIED, WITH REGARD TO THIS DOCUMENT OR ANY SOFTWARE OR ACCOMPANYING HARDWARE, INCLUDING, BUT NOT LIMITED TO, THE IMPLIED WARRANTIES OF MERCHANTABILITY AND FITNESS FOR A PARTICULAR PURPOSE. To the extent permitted by applicable law, Cypress reserves the right to make changes to this document without further notice. Cypress does not assume any liability arising out of the application or use of any product or circuit described in this document. Any information provided in this document, including any sample design information or programming code, is provided only for reference purposes. It is the responsibility of the user of this document to properly design, program, and test the functionality and safety of any application made of this information and any resulting product. Cypress products are not designed, intended, or authorized for use as critical components in systems designed or intended for the operation of weapons, weapons systems, nuclear installations, life-support devices or systems, other medical devices or systems (including resuscitation equipment and surgical implants), pollution control or hazardous substances management, or other uses where the failure of the device or system could cause personal injury, death, or property damage ("Unintended Uses"). A critical component is any component of a device or system whose failure to perform can be reasonably expected to cause the failure of the device or system, or to affect its safety or effectiveness. Cypress is not liable, in whole or in part, and you shall and hereby do release Cypress from any claim, damage, or other liability arising from or related to all Unintended Uses of Cypress products. You shall indemnify and hold Cypress harmless from and against all claims, costs, damages, and other liabilities, including claims for personal injury or death, arising from or related to any Unintended Uses of Cypress products.

Cypress, the Cypress logo, Spansion, the Spansion logo, and combinations thereof, WICED, PSoC, CapSense, EZ-USB, F-RAM, and Traveo are trademarks or registered trademarks of Cypress in the United States and other countries. For a more complete list of Cypress trademarks, visit cypress.com. Other names and brands may be claimed as property of their respective owners.