EXAMPLE NAME: BUCK_VC_FIX_FQ_EXAMPLE_XMC13

OVERVIEW: This example implements a Buck Converter in Peak Current Control mode with the BUCK_VC_FIX_FQ APP for being used together with the XMC Digital Power Explorer kit.

DESCRIPTION:
This example implements a Buck Converter in Voltage Control Mode controller for being used together with the XMC Digital Power Explorer kit. The project is implemented using XMC1300, a 32-bit ARM Cortex M0 based microcontroller. It has dedicated control peripherals such as the CCU8 PWM module for PWM generation and a Versatile Analog-to-Digital (VADC) module for analog signal measurement, making it suitable for applications that require fast calculation such as the Voltage Control mode.
The voltage Control loop is implemented by a classic 3 poles 3 zeros filter using fixed points values.
The provided filter coefficients have been selected to have the following controller characteristics:

- Switching freq = 100kHz
- Crossover freq = 5kHz
- Phase margin = 50 degrees
- PWM resolution = 15.625 ns
- ADC resolution = 12 bits

VADC conversion is being continuously triggered by the Compare Match 2 of the CCU8 (set by default to the maximum, period value).
Once the output voltage has being measured by the VADC an interrupt is generated.
Inside the ISR, the 3 poles 3 zeros controller is applied and new value for the duty cycle is set.

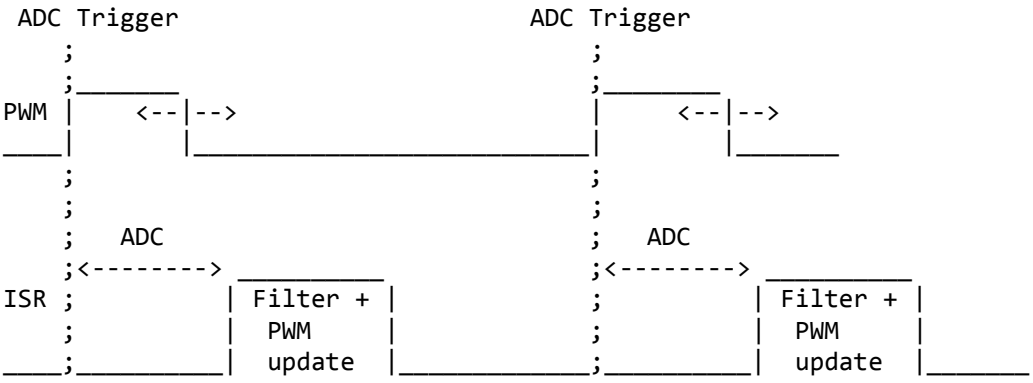

Note: The example BUCK_VC_DIGITAL_POWER_EXPLORER_XMC13, also available in DAVE server, implements similar functionality for the same hardware (XMC Digital Power Explorer Kit). The main difference is that in the BUCK_VC_DIGITAL_POWER_EXPLORER_XMC13 project low level APPs are being used for configuring individually the required peripherals. Compared to using the BUCK_VC_FIX_FQ APPs, the low level APPs approach has advantages like the flexibility or the higher performance for the control loop and disadvantages like the higher complexity in terms of configuration and readability of the code.

REQUIRMENTS:

XMC1300 Digital Power Control Card and XMC Digital Power Explorer Kit
DAVE Version: 4.2.8

HOW TO CREATE THE PROJECT:

1. Open the DAVE CE and use  "Add IDE New Project Wizard" on the toolbar to add a new DAVE Project.

Enter Project Name
Select "Project Type ➔ DAVE CE Project"

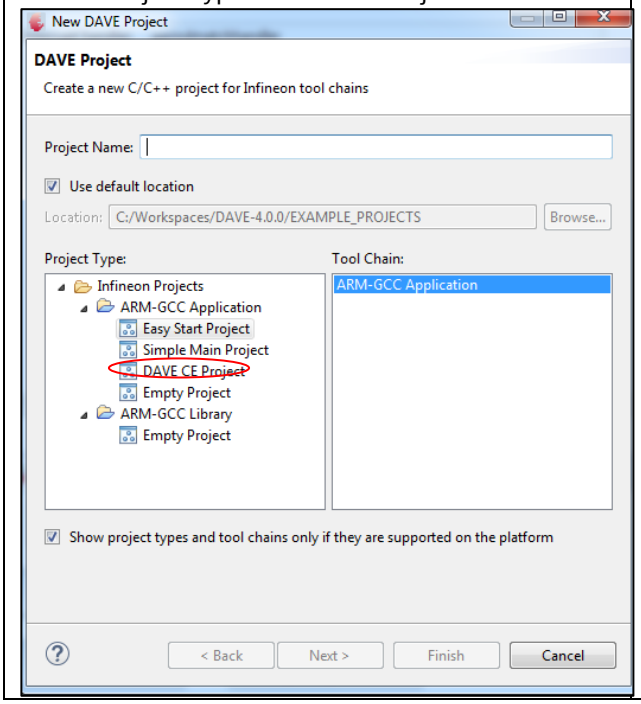

Select Processors Info
➔XMC1300 Series ➔ XMC1302-T038X0200

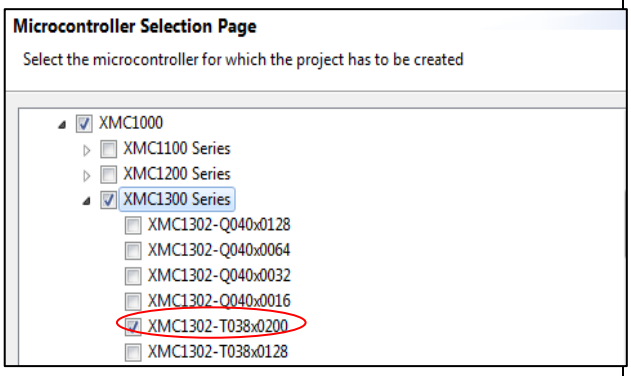

2. Use the  "Add New App" in the toolbar to add 1 instance of BUCK_PCC_FIX_FQ. Configure the APP instance with the following configurations.

- **Views: APP Dependency Tree and APP Dependency**

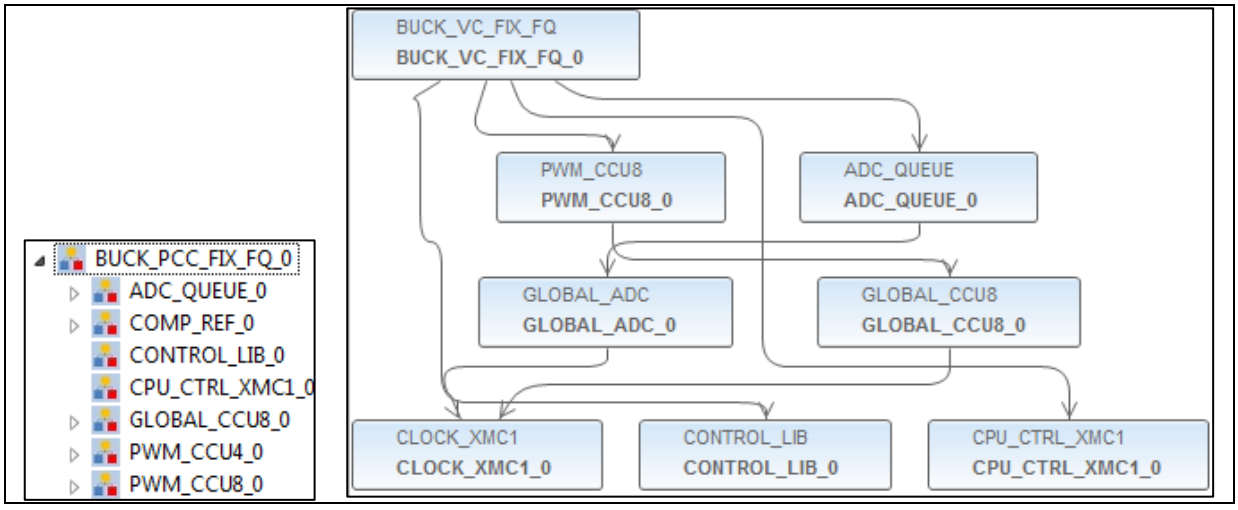

- **BUCK_PCC_FIX_FQ_XMC13:**

  - Buck Converter Configuration tab :

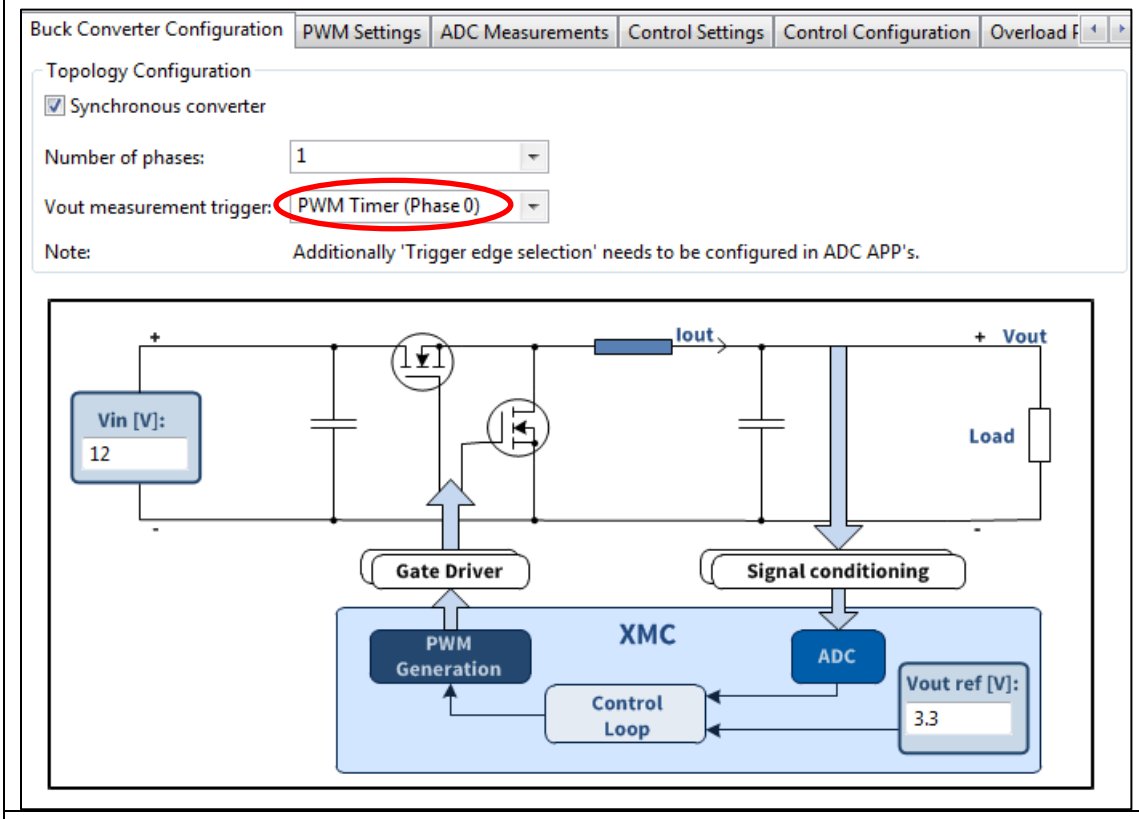

  - PWM Settings tab :

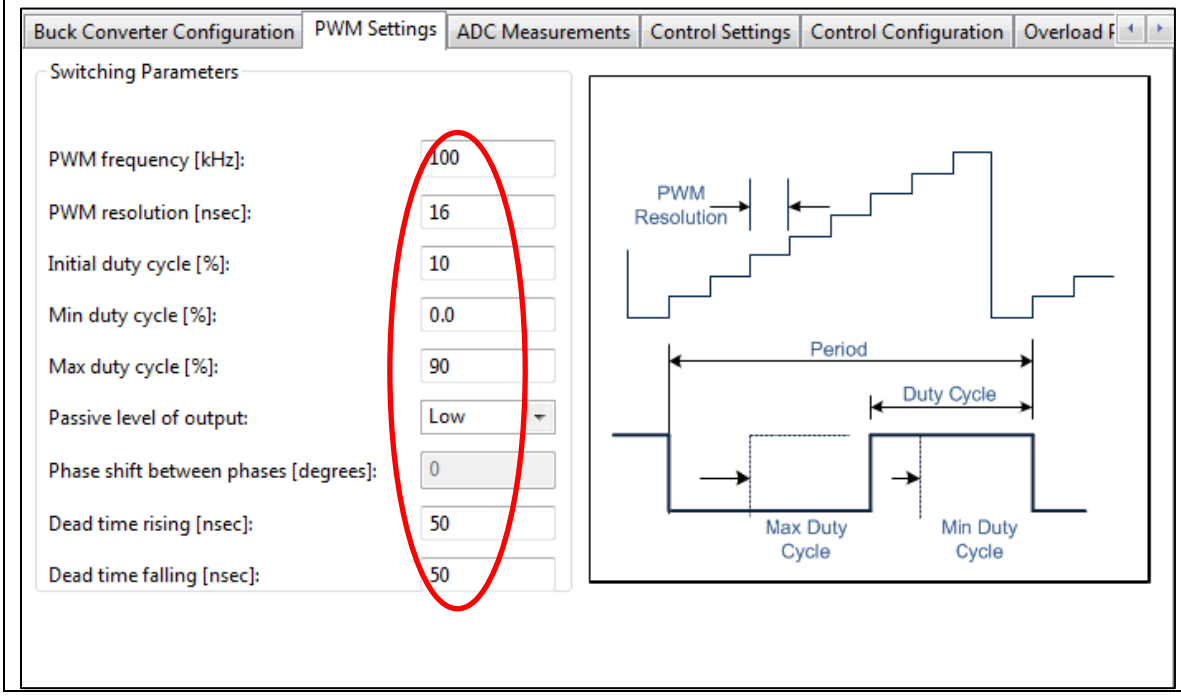

- Control Settings tab :

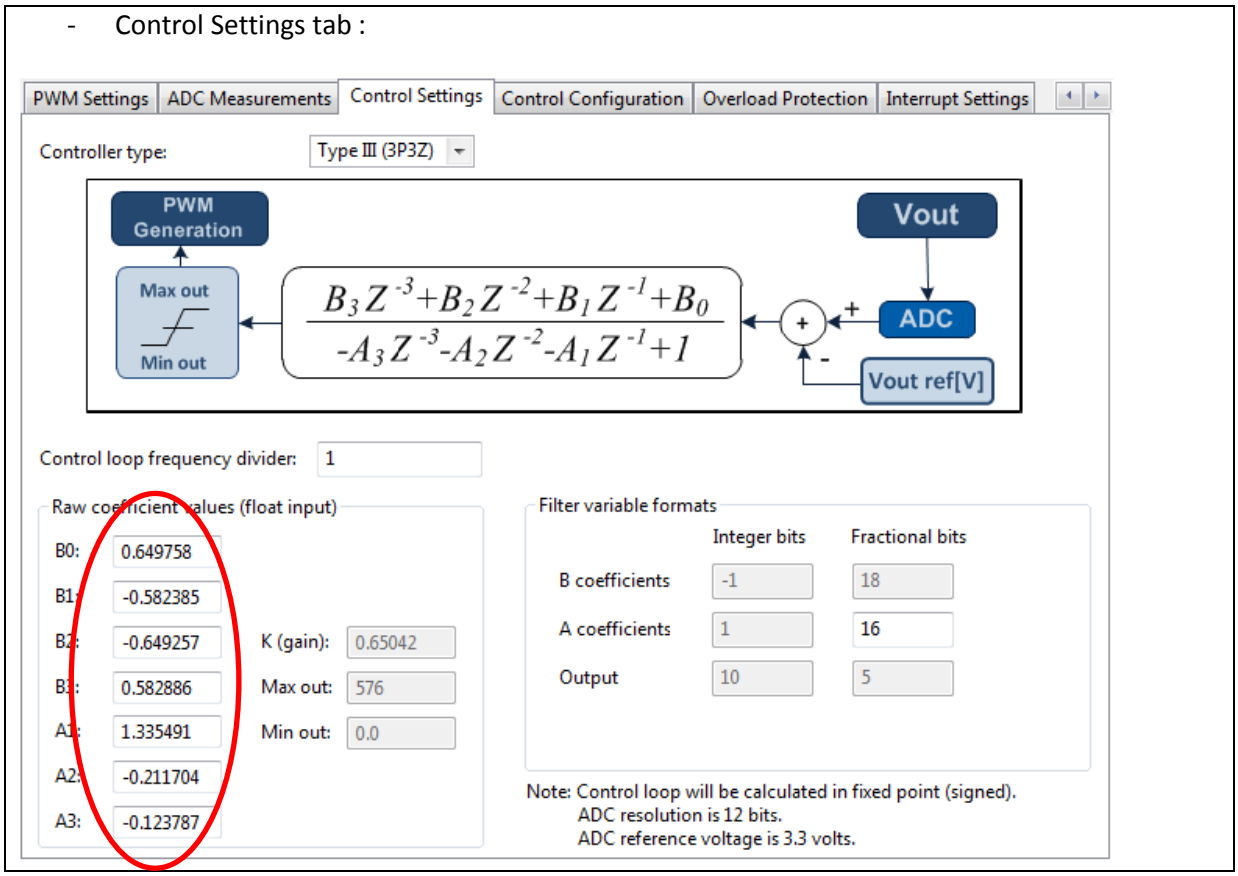

- **ADC_SCAN :**

  - General Settings tab :

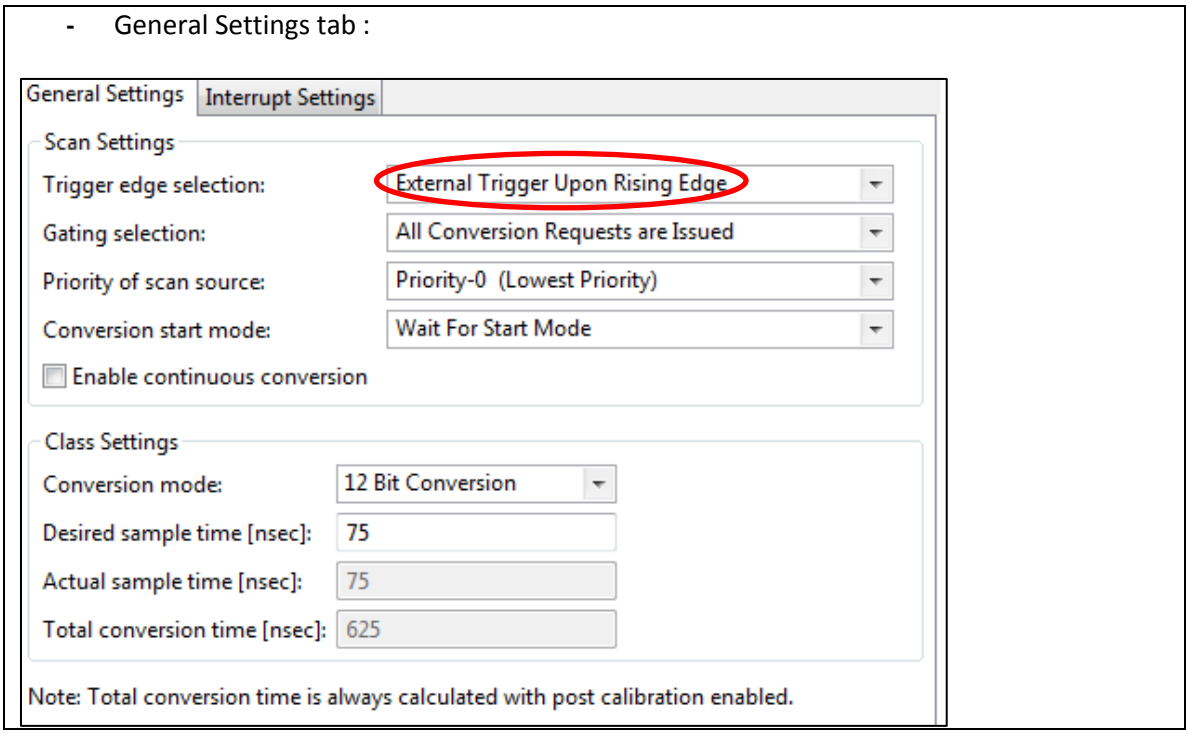

3. Use the  "Manual Pin Allocator" found in the toolbar, configure the pins for the VADC and PWM outputs.

APP Instance Name	APP Pin Name	Pin Number (Port)
BUCK_VC_FIX_FQ_0		
	Vout pin	#38 (P2.3)
PWM_CCU8_0		
	PWM_CCU8 CH1 Direct Out	#17 (P0.0)
	PWM_CCU8 CH1 Invert Out	#22 (P0.5)

4. Generate the code for the configurations made and change main.c accordingly.

5. Build and download to the microcontroller.

HOW TO TEST:

1. Create the project
2. Prepare board set up: connect XMC1300 Digital Power Control Card into XMC Digital Power Explorer and supply power with included power adapter to it. Make sure power on switch is in the "on" position and that the jumper in power board is in the **XMC4000** position
3. Generate code, compile and flash the application onto the device
4. Run the application.
5. Check via oscilloscope the different test points available in XMC Digital Power Explorer. Vout is now controlled to be stable at 3,3 V independent of load switching LEDs next to load switches must turn on when that particular load is activated.
6. If changes are needed in APPs configuration, make sure code is generated again before compiling