1 Introduction

This document provides information about BLDC scalar control example software on Infineon's XMC130x micro-controllers platform. BLDC scalar control example software is offered as "simple main project in DAVE IDE". BLDC scalar control example project consists of Sensor-less 3-Phase BLDC Motor control algorithm software, primarily targeted end applications are fans, pumps, power tools and e-bike segment. This example project will provide high level of configurability and modularity to address different segments. This project can be easily configured as per requirements with the help of configuration files.

1.1 Sensor-less BLDC Motor Control

3-phase BLDC motors are synchronous motors and exhibits trapezoidal shape phase back-emf. Due to nature of back-emf wave shape, these motors require rectangular current pulses during 120 degree flat portion of back-emf for both positive and negative half, to prevent torque ripple. In addition, to produce maximum torque for applied stator phase current, the stator magnetic fields must rotate in synchronism with rotor, and its orientation should be in space quadrature to rotor magnetic field. To achieve these objectives, trapezoidal control algorithm requires rotor position feedback for every 60 electric degrees. In sensor-less schemes, rotor position feedback for every 60 degree provided by Back-emf waveform.

2 Features Offered

This example software offers following features:

1. Control Schemes - Open loop voltage control, speed control, current control and speed inner current control
2. PWM modulation schemes - High side modulation, low side modulation, high side with synchronous rectification
3. Back-emf zero crossing detection with Vdc by-two threshold using ADC boundary checking.
4. Motor Start-up from standstill: Support Inductive Position Detection or Align/go for smooth start.
5. Motor Ramp-up from standstill - Provide closed loop current control, for first excitation pattern (to get fastest acceleration) and also for subsequent excitation patterns during ramp-up.
6. Motor Ramp-up from spinning motor- Back-emf detection utilizing adc-on-chip gain to detect slowest speed for catch-free ramp-up.
7. Protection - Over-current, Short circuit, Under/Over voltage and ctrap with MCU HW features.
8. Low speed measurement - Able to detects very low motor speed using floating pre-scaler feature of CCU4 peripheral.
9. Enhanced Current Measurement - Configurable low pass filter, ADC on chip gain, Demagnetization spike blanking for current measurement.
10. DC bus voltage clamping during fast braking.

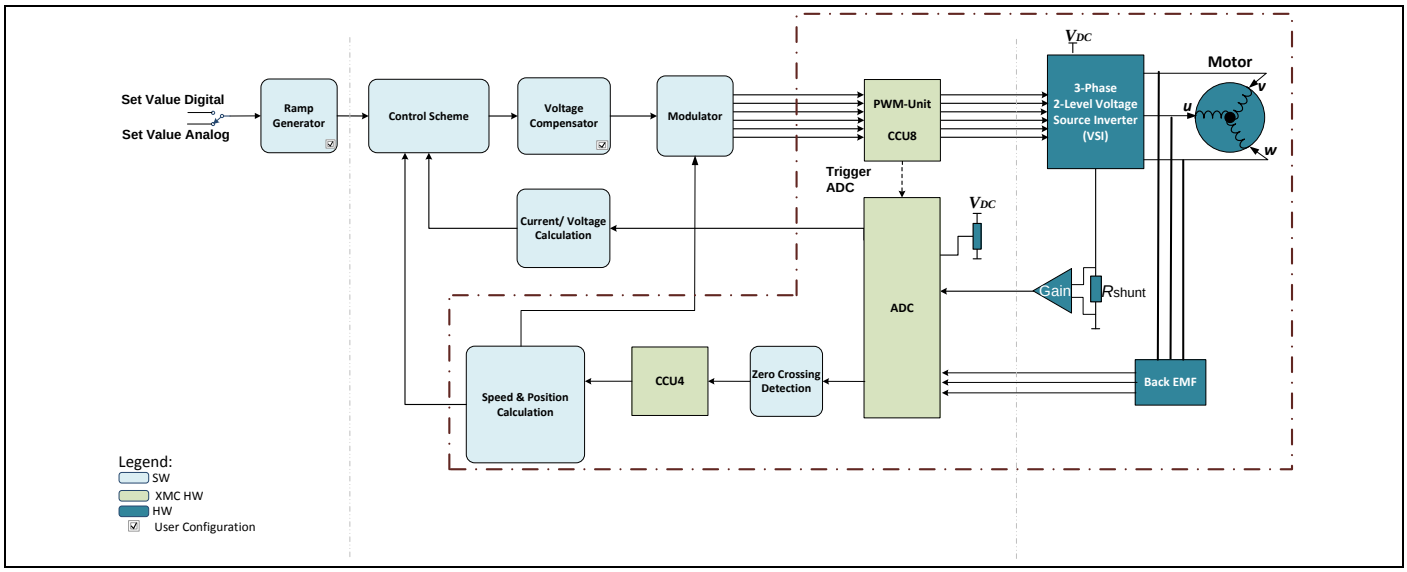

3 Usage

By default, BLDC_SCALAR_SL_XMC13 example software parameters are configured to drive 3-phase Maxon's BLDC motor using XMC1000 motor control application kit, Part no:KIT_XMC1X_AK_MOTOR_001.

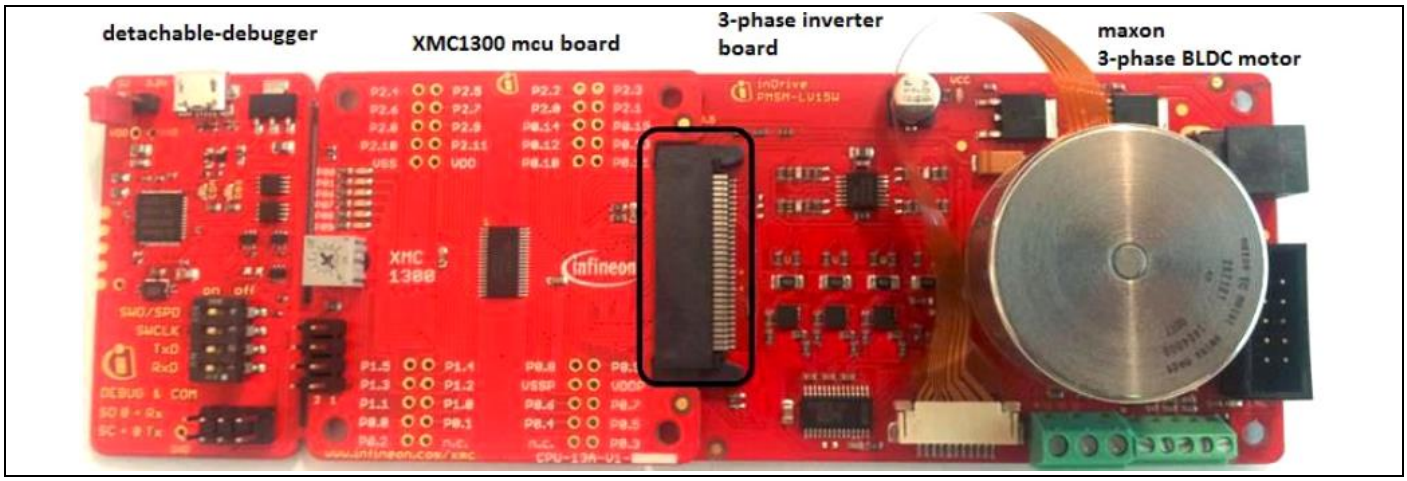

Default configuration in Example Software:

1. Control scheme: MOTOR0_BLDC_SCALAR_SPEED_CTRL.
2. PWM modulation: MOTOR0_BLDC_SCALAR_PWM_HIGHSIDE.
3. PWM frequency: 20000Hz.
4. Speed set: 2000 RPM.
5. Ramp up and ramp down rate: 500 RPM/s.
6. Over-current protection with direct DC link current measurement.

Prerequisite: The Example software is supported on DAVE v4.2.6 or later.

3.1 Get the motor running from DAVE

1. Build and download the software into XMC of above mentioned motor control kit.
2. Execute the project.

Observations:

Motor should ramp to 2000RPM with ramp rate of 500RPM/s.