

Firmware Update of CMSIS-DAP

How to update Spansions CMSIS-DAP based on MB9AF312K MCU

2014-12-11, MSc, V1.5

Warranty and Disclaimer

The use of the deliverables (e.g. software, application examples, target boards, evaluation boards, starter kits, schematics, engineering samples of IC's etc.) is subject to the conditions of Spansion as set out in (i) the terms of the License Agreement and/or the Sale and Purchase Agreement under which agreements the Product has been delivered, (ii) the technical descriptions and (iii) all accompanying written materials.

Please note that the deliverables are intended for and must only be used for reference in an evaluation laboratory environment. The software deliverables are provided on an as-is basis without charge and are subject to alterations. It is the user's obligation to fully test the software in its environment and to ensure proper functionality, qualification and compliance with component specifications.

Regarding hardware deliverables, Spansion warrants that they will be free from defects in material and workmanship under use and service as specified in the accompanying written materials for a duration of 1 year from the date of receipt by the customer. Should a hardware deliverable turn out to be defect, Spansion's entire liability and the customer's exclusive remedy shall be, at Spansion´s sole discretion, either return of the purchase price and the license fee, or replacement of the hardware deliverable or parts thereof, if the deliverable is returned to Spansion in original packing and without further defects resulting from the customer's use or the transport. However, this warranty is excluded if the defect has resulted from an accident not attributable to Spansion, or abuse or misapplication attributable to the customer or any other third party not relating to Spansion or to unauthorised decompiling and/or reverse engineering and/or disassembling.

Spansion does not warrant that the deliverables do not infringe any third party intellectual property right (IPR). In the event that the deliverables infringe a third party IPR it is the sole responsibility of the customer to obtain necessary licenses to continue the usage of the deliverable.

In the event the software deliverables include the use of open source components, the provisions of the governing open source license agreement shall apply with respect to such software deliverables. To the maximum extent permitted by applicable law Spansion disclaims all other warranties, whether express or implied, in particular, but not limited to, warranties of merchantability and fitness for a particular purpose for which the deliverables are not designated. To the maximum extent permitted by applicable law, Spansion's liability is restricted to intention and gross negligence. Spansion is not liable for consequential damages.

Should one of the above stipulations be or become invalid and/or unenforceable, the remaining stipulations shall stay in full effect. The contents of this document are subject to change without a prior notice, thus contact Spansion about the latest one.

This board and its deliverables must only be used for test applications in an evaluation laboratory environment.

© 2013 Spansion Inc.

Content

- The Spansion CMSIS-DAP firmware update contains
  - *mb9af31xk_cmsis_dap_vXX.srec* (XX = version number) firmware file
  - *CmsisDapVersionInfo.exe* Program to determine firmware version

Firmware Version < V2.2

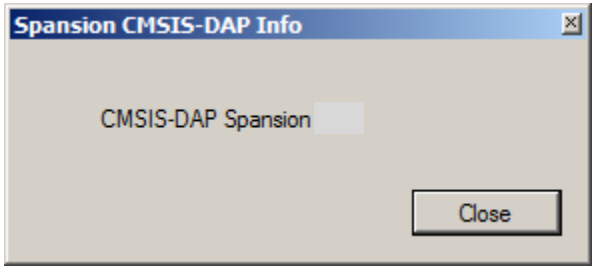

Firmware Version >= 2.2

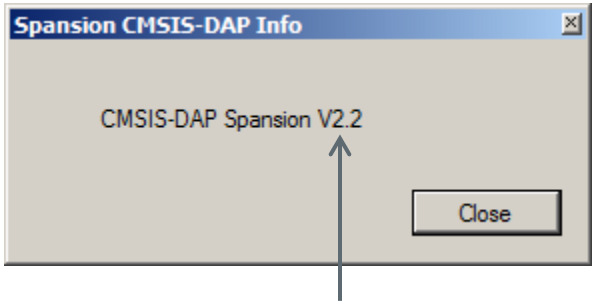

Shows version information

© 2013 Spansion Inc.

Version History

2013-04-01 1.0 MSc	Initial
2013-05-06 1.1 MSc	Speed optimization
2013-06-02 1.2 MSc	Verification_TargetMB9BF50x added
2013-06-10 1.3 MSc	Virtual Com Port usage added
2013-06-10 1.4 MSc	Bug fixes for connection recognition
2013-08-20 1.5 MSc	JTAG Ports high-level if no CMSIS-DAP is used
2013-11-01 1.6 MSc	Short reset of about 10ms at powering CMSIS-DAP VID updated to Spansion driver installer executable added
2013-11-11 1.7 MSc	Speed-Up: Internal Bus Frequency is now 40MHz
2013-11-20 1.8 MSc	Set configuration bug-fix in cmsis-dap HID class
2013-11-28 1.9 MSc	LED is fading for crystal testing purposes
2014-04-16 2.0 MSc	Serial Part Updated to be compatible with FM0, FM3 and FM4 Serial Programmer and CalTool
2014-07-31 2.1 MSc	Added frequency generation at pin11 if pin19 is grounded pin19 is pulled-up internally connect LED bliks now correct on UART communication
2014-09-15 2.2 MSc	Version information added to product information string
2015-11-24 2.3 MSc	Compatibility fixes for Mac OS X and Linux

© 2013 Spansion Inc.

Firmware Update of CMSIS-DAP

Available evaluation boards with assembled CMSIS-DAP

SK-FM3-176PMC-TFT



SK-FM4-120PMC-TFT



SK-FM4-U120-9B560



SK-FM3-176PMC-ETHERNET V2.0

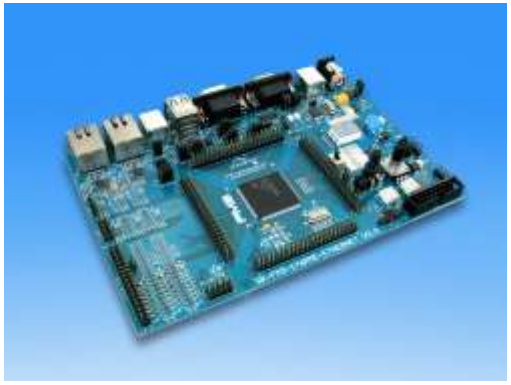

SK-FM0-V48-S6E1A1

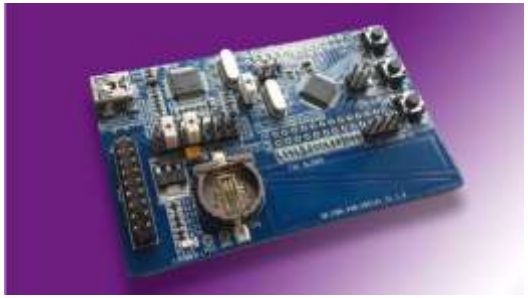

BULB-BOARD-MINI



© 2013 Spansion Inc.

Firmware Update of CMSIS-DAP

Available evaluation boards with assembled CMSIS-DAP

SK-FM4-216-ETHERNET

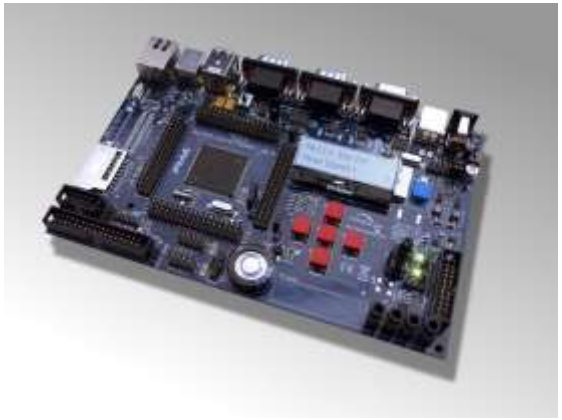

SK-FM4-176L-S6E2CC



© 2013 Spansion Inc.

Firmware Update of CMSIS-DAP

Firmware Upgrade at SK-FMx-xxxPMC-TFT (1/2)

- Prepare evaluation board for firmware update:
  1. Set Jumper JP30
  2. Connect USB cable to X16
  3. Power the board (X5)

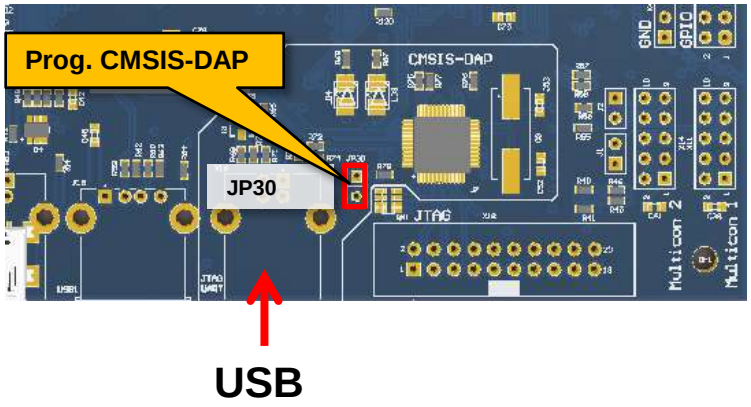

© 2013 Spansion Inc.

Firmware Update of CMSIS-DAP

Firmware Upgrade at SK-FMx-xxxPMC-TFT (2/2)

- Open Fujitsu USB Direct Programmer

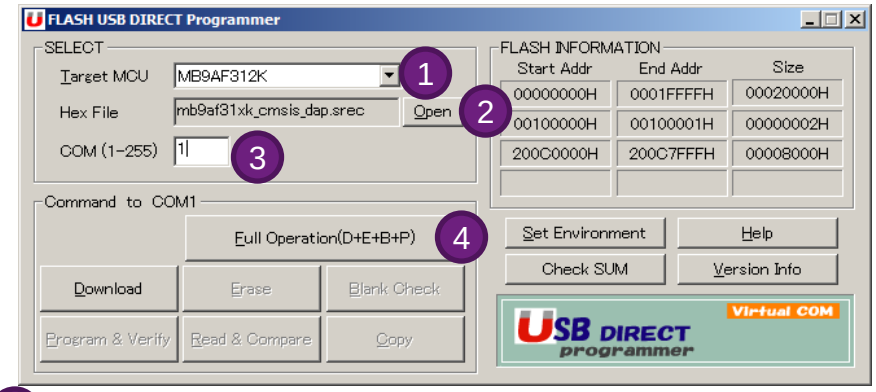

- 1 Select MB9AF312K as target
- 2 Load the the firmware file mb9af31xk_cmsis_dap_Vxx.srec (xx = version)
- 3 Choose new attached com port
- 4 Click „Full Operation (D+E+B+P)“
- Wait upgrading process had finished
- Remove power and remove jumper JP30
- Repower the board

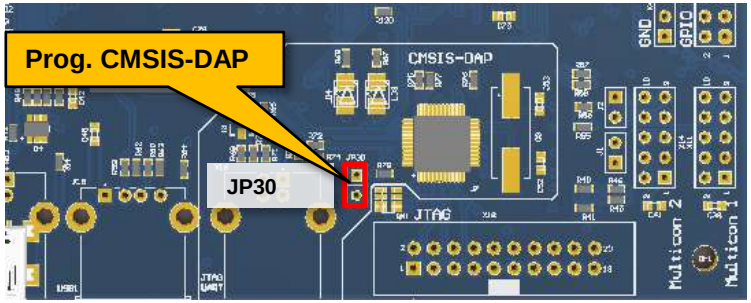

© 2013 Spansion Inc.

Firmware Update of CMSIS-DAP

Firmware Upgrade at SK-FM4-U120-9B560 (1/2)

- Prepare evaluation board for firmware update:
  1. Set Jumper J15 to 3.3V usage
  2. Set J7 to powering via CN3
  3. Set J5 to firmware update mode
  4. Connect USB cable to CN3

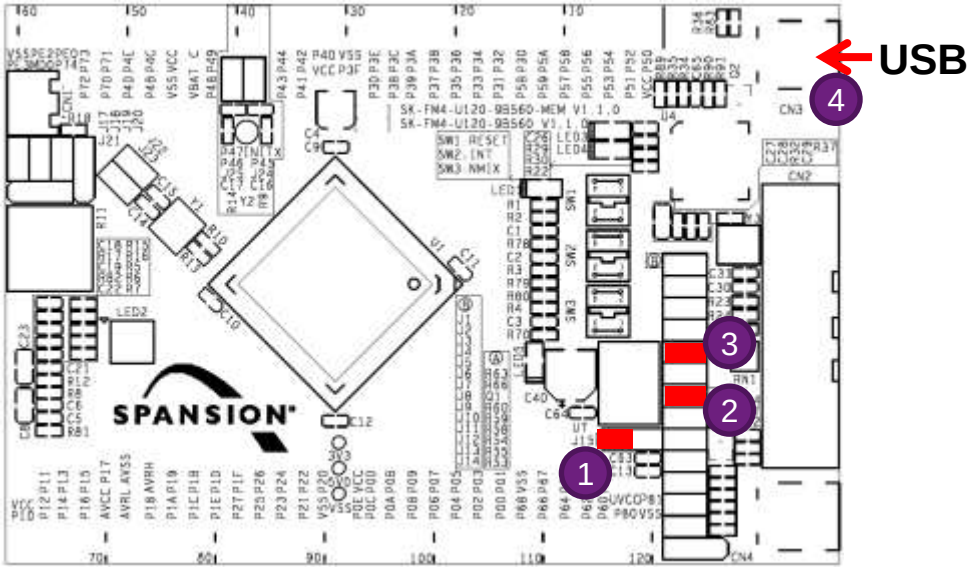

© 2013 Spansion Inc.

Firmware Update of CMSIS-DAP

Firmware Upgrade at SK-FM4-U120-9B560 (2/2)

- Open Fujitsu USB Direct Programmer

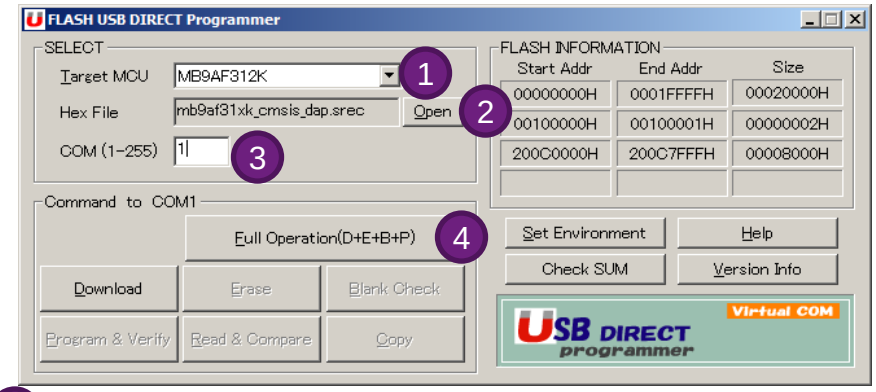

- 1 Select MB9AF312K as target
- 2 Load the the firmware file mb9af31xk_cmsis_dap_Vxx.srec (xx = version)
- 3 Choose new attached com port
- 4 Click „Full Operation (D+E+B+P)“
- Wait upgrading process had finished
- Remove USB from CN3 and remove jumper J5
- Repower the device

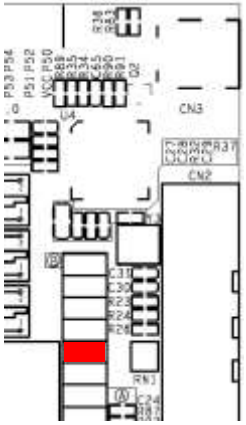

© 2013 Spansion Inc.

Firmware Update of CMSIS-DAP

Firmware Upgrade at SK-FM3-176PMC-ETHERNET V2.0 (1/2)

- Prepare evaluation board for firmware update:
  1. Set Jumper J5 to USBPWR1
  2. Set JP47 to firmware update mode
  3. Connect USB cable to X11

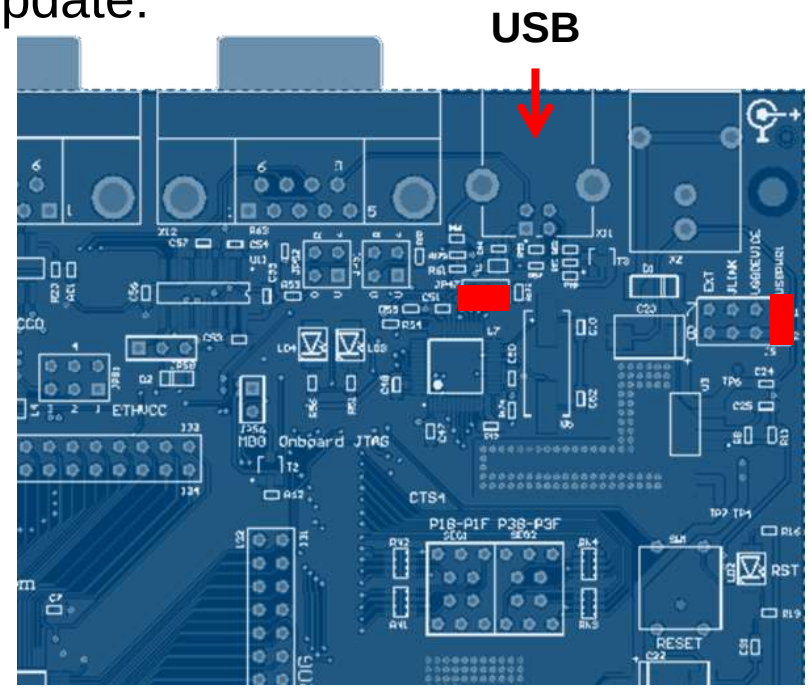

© 2013 Spansion Inc.

Firmware Upgrade at SK-FM3-176PMC-ETHERNET V2.0 (2/2)

- Open Fujitsu USB Direct Programmer

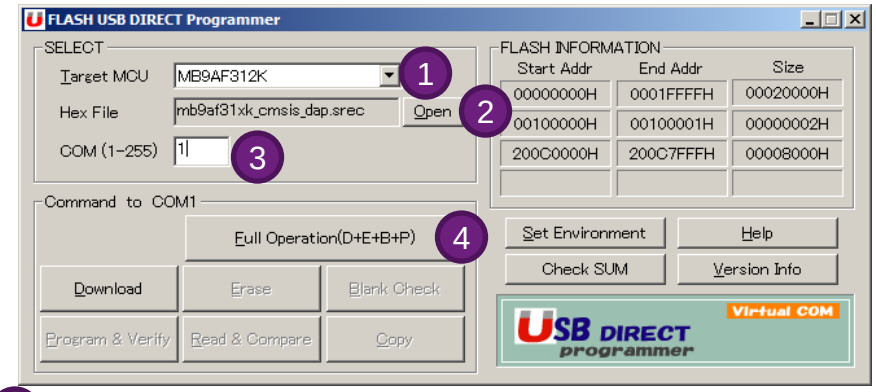

- 1 Select MB9AF312K as target
- 2 Load the the firmware file mb9af31xk_cmsis_dap_Vxx.srec (xx = version)
- 3 Choose new attached com port
- 4 Click „Full Operation (D+E+B+P)“
- Wait upgrading process had finished
- Remove USB from X11 and remove jumper J47
- Repower the device

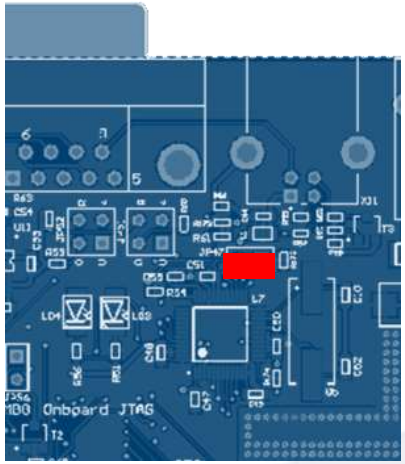

© 2013 Spansion Inc.

Firmware Update of CMSIS-DAP

Firmware Upgrade at SK-FM0-V48-S6E1A1 (1/2)

- Prepare evaluation board for firmware update:
  1. Set Jumper J4 to 3.3V usage
  2. Set J1 to powering via CN3
  3. Set J8 to firmware update mode
  4. Connect USB cable to CN3

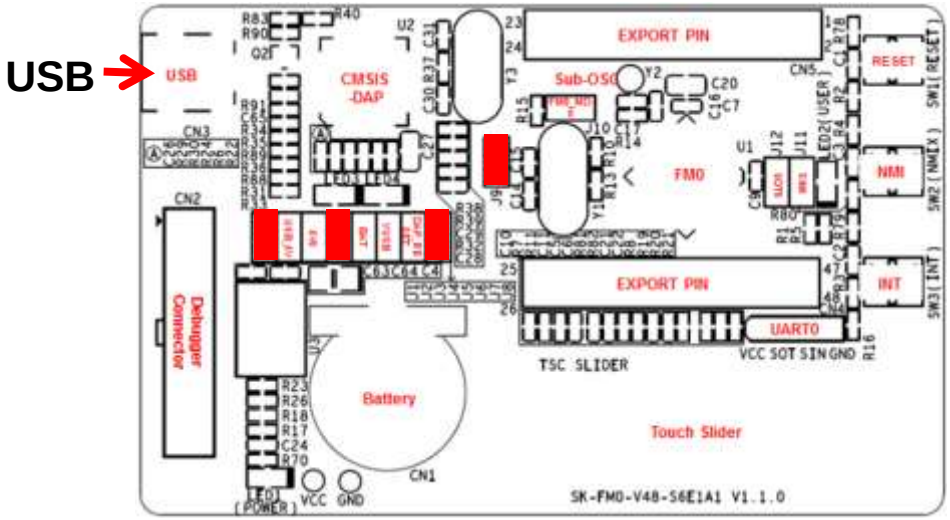

© 2013 Spansion Inc.

Firmware Update of CMSIS-DAP

Firmware Upgrade at SK-FM0-V48-S6E1A1 (2/2)

- Open Fujitsu USB Direct Programmer

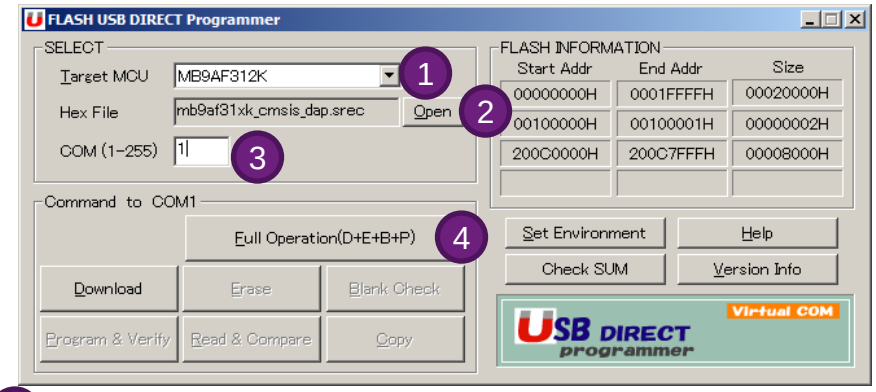

- 1 Select MB9AF312K as target
- 2 Load the the firmware file mb9af31xk_cmsis_dap_Vxx.srec (xx = version)
- 3 Choose new attached com port
- 4 Click „Full Operation (D+E+B+P)“
- Wait upgrading process had finished
- Remove USB from CN3 and remove jumper J8
- Repower the device

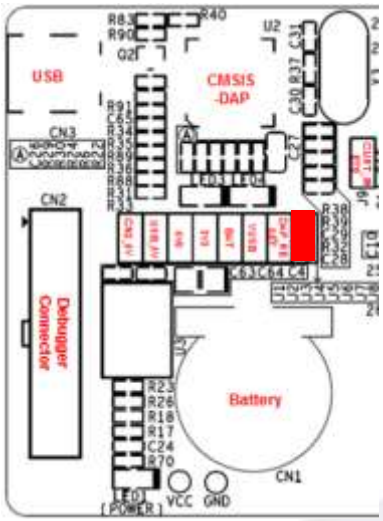

© 2013 Spansion Inc.

Firmware Upgrade at BULB-BOARD-MINI (1/2)

- Prepare evaluation board for firmware update:
  1. Set J2 to firmware update mode
  2. Connect USB (X1)

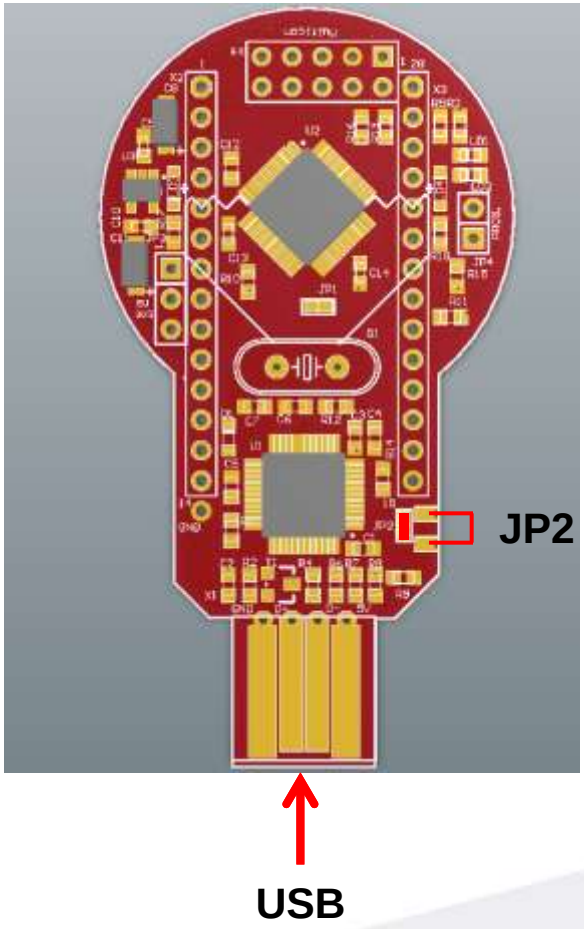

© 2013 Spansion Inc.

Firmware Upgrade at BULB-BOARD-MINI (2/2)

- Open Fujitsu USB Direct Programmer

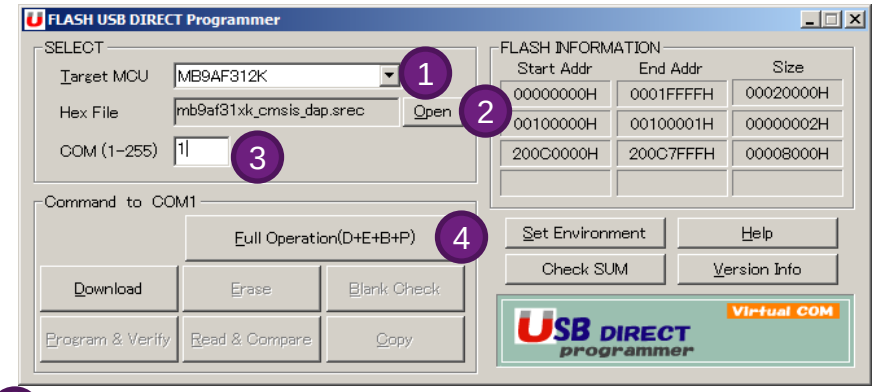

- 1 Select MB9AF312K as target
- 2 Load the the firmware file mb9af31xk_cmsis_dap_Vxx.srec (xx = version)
- 3 Choose new attached com port
- 4 Click „Full Operation (D+E+B+P)“
- Wait upgrading process had finished
- Remove USB from X1 and remove jumper J2
- Repower the device

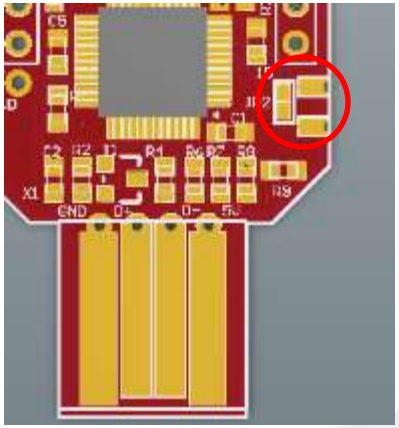

© 2013 Spansion Inc.

Firmware Upgrade at SK-FM4-216-ETHERNET (1/2)

- Prepare evaluation board for firmware update:
  1. Set JP62 (Power ON)
  2. Set Jumper JP76 and JP77 to USB powering
  3. Set JP76 to powering via CN3
  4. Set JP18 to firmware update mode
  5. Turn on power via S2
  6. Connect USB cable to X2

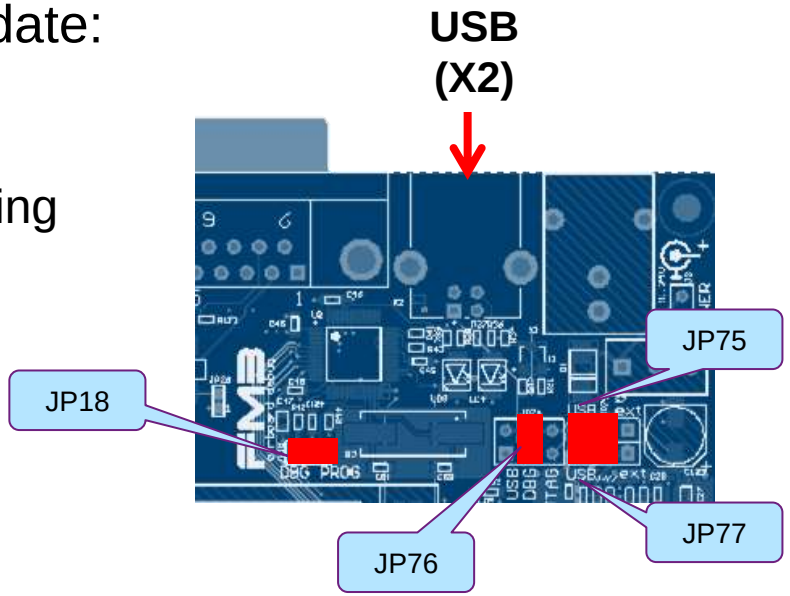

© 2013 Spansion Inc.

Firmware Upgrade at SK-FM4-216-ETHERNET (2/2)

- Open Fujitsu USB Direct Programmer

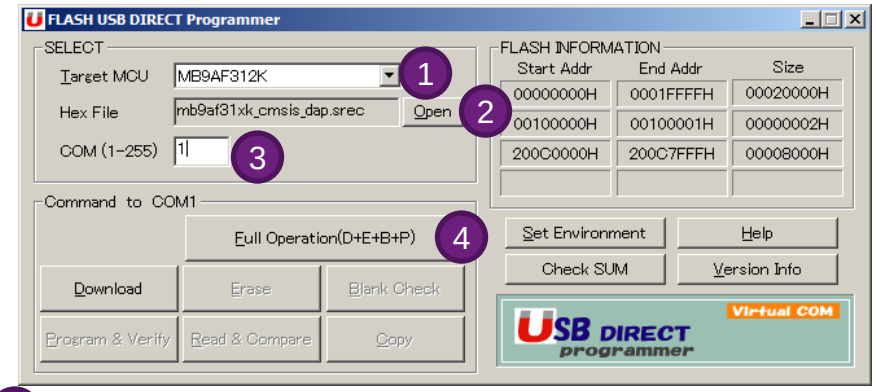

- 1 Select MB9AF312K as target
- 2 Load the the firmware file mb9af31xk_cmsis_dap_Vxx.srec (xx = version)
- 3 Choose new attached com port
- 4 Click „Full Operation (D+E+B+P)“
- Wait upgrading process had finished
- Remove USB from X2 and remove jumper JP18
- Repower the device

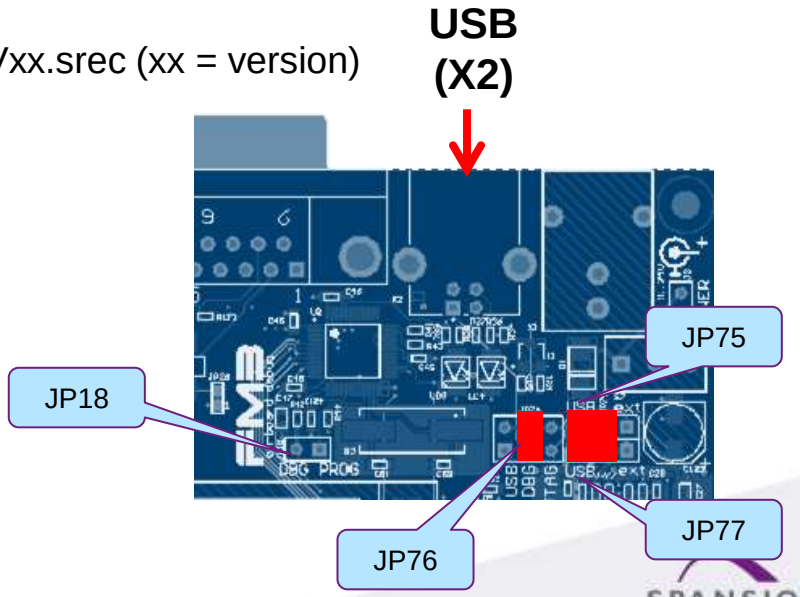

© 2013 Spansion Inc.

Firmware Upgrade at SK-FM4-216-ETHERNET (1/2)

- Prepare evaluation board for firmware update:
  1. Set Jumper J4 to 1-2 powering via CN3 (CMSIS-DAP)
  2. Set JP1 to firmware update mode
  3. Connect USB cable to CN2

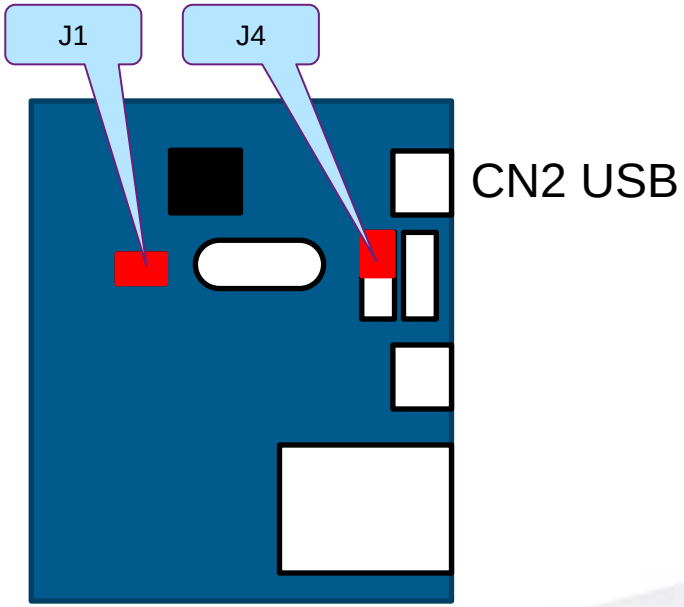

© 2013 Spansion Inc.

Firmware Update of CMSIS-DAP

Firmware Upgrade at SK-FM4-216-ETHERNET (2/2)

- Open Fujitsu USB Direct Programmer

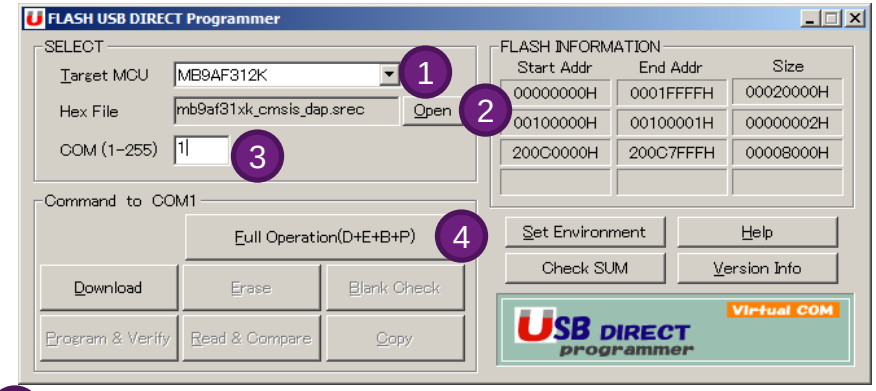

- 1 Select MB9AF312K as target
- 2 Load the the firmware file mb9af31xk_cmsis_dap_Vxx.srec (xx = version)
- 3 Choose new attached com port
- 4 Click „Full Operation (D+E+B+P)“
- Wait upgrading process had finished
- Remove USB from CN2 and remove jumper JP1
- Repower the device

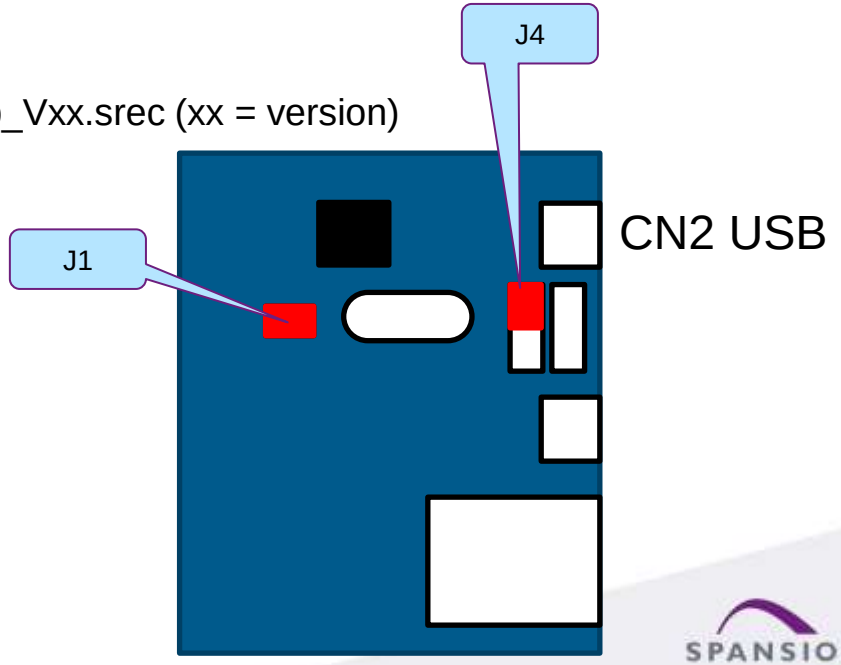

© 2013 Spansion Inc.



www.spansion.com

Spansion®, the Spansion logo, MirrorBit®, MirrorBit® Eclipse™ and combinations thereof are trademarks and registered trademarks of Spansion LLC in the United States and other countries. Other names used are for informational purposes only and may be trademarks of their respective owners.

This document is for informational purposes only and subject to change without notice. Spansion does not represent that it is complete, accurate or up-to-date; it is provided “AS IS.” To the maximum extent permitted by law, Spansion disclaims any liability for loss or damages arising from use of or reliance on this document.