Revision History

Version	Date	Updated by	Approved by	Modifications
1.0.0	2013-05-02	Rex Cao		First draft
1.1.0	2013-06-17	Kevin Lin		1. D2->LED3,D3->LED4,D6->LED5 2. CN3 J6 of V1.0.0)P5-->GND,CN4 J14 of V1.0.0)P5-->GND 3. TPOINT GND->TPOIN VSS 4. All of the J? has renamed, and add J19,J20 5. R11 510R->10K 6. R9 10M->1M 7. Q1,Q2 package update 8. SDRAM CS change from MCSX1_0 R(IN96) to MCSX8_0 R(IN35) 9. Add R13, R14 for Oscillator of MB9BF568R U(1)
1.2.0	2013-11-26	Kevin Lin		1. Use "Spansion" Brand 2. NC J22,J23,J24,J25 3. NC R9

Spansion Semiconductor(China)Co.,Ltd		
Author: Rex.Cao		SPANSION
Title	(SCH)SK-FM4-U120-9B560(-MEM)	
Size B	Document Number Cover	Rev V1.2.0
Date: Tuesday, November 26, 2013	Sheet 1 of 9	

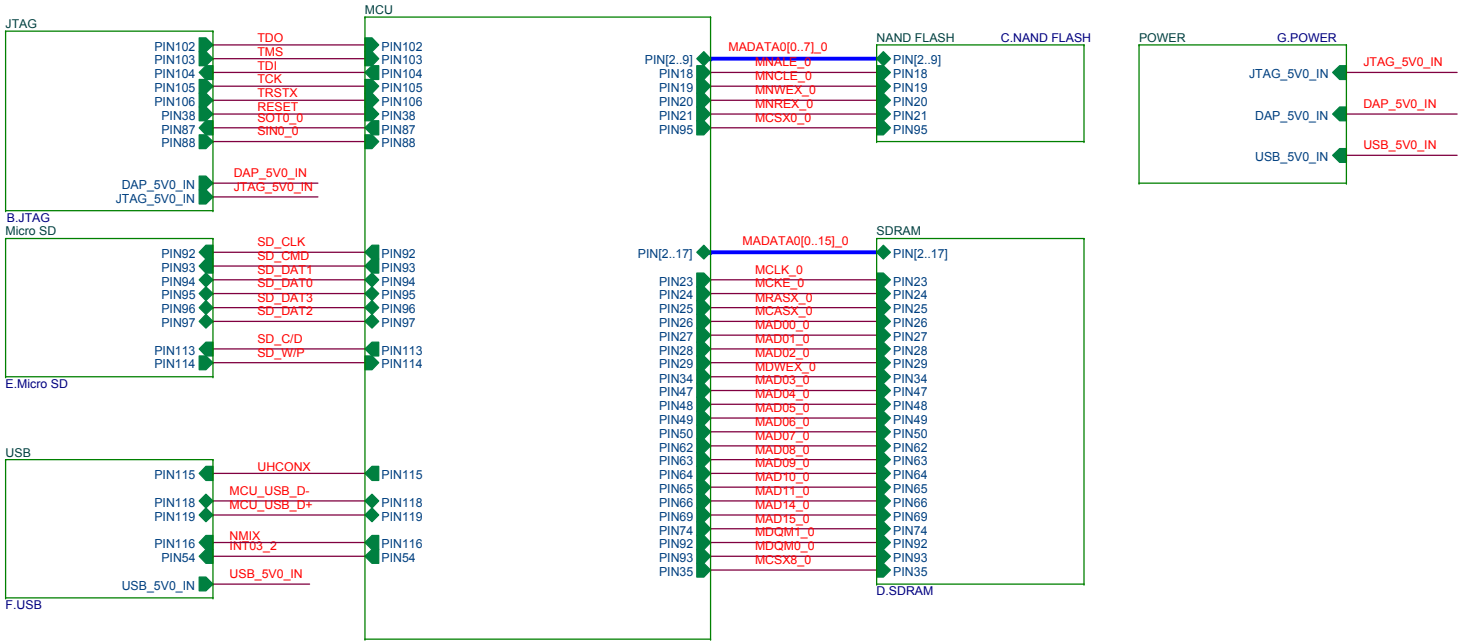

Spansion Semiconductor(China)Co.,Ltd		
Author: Rex.Cao		
Title: (SCH)SK-FM4-U120-9B560(-MEM)		
Size: B	Document Number: Hierarchical_Page	Rev: V1.2.0
Date: Tuesday, November 26, 2013	Sheet 2 of 9	

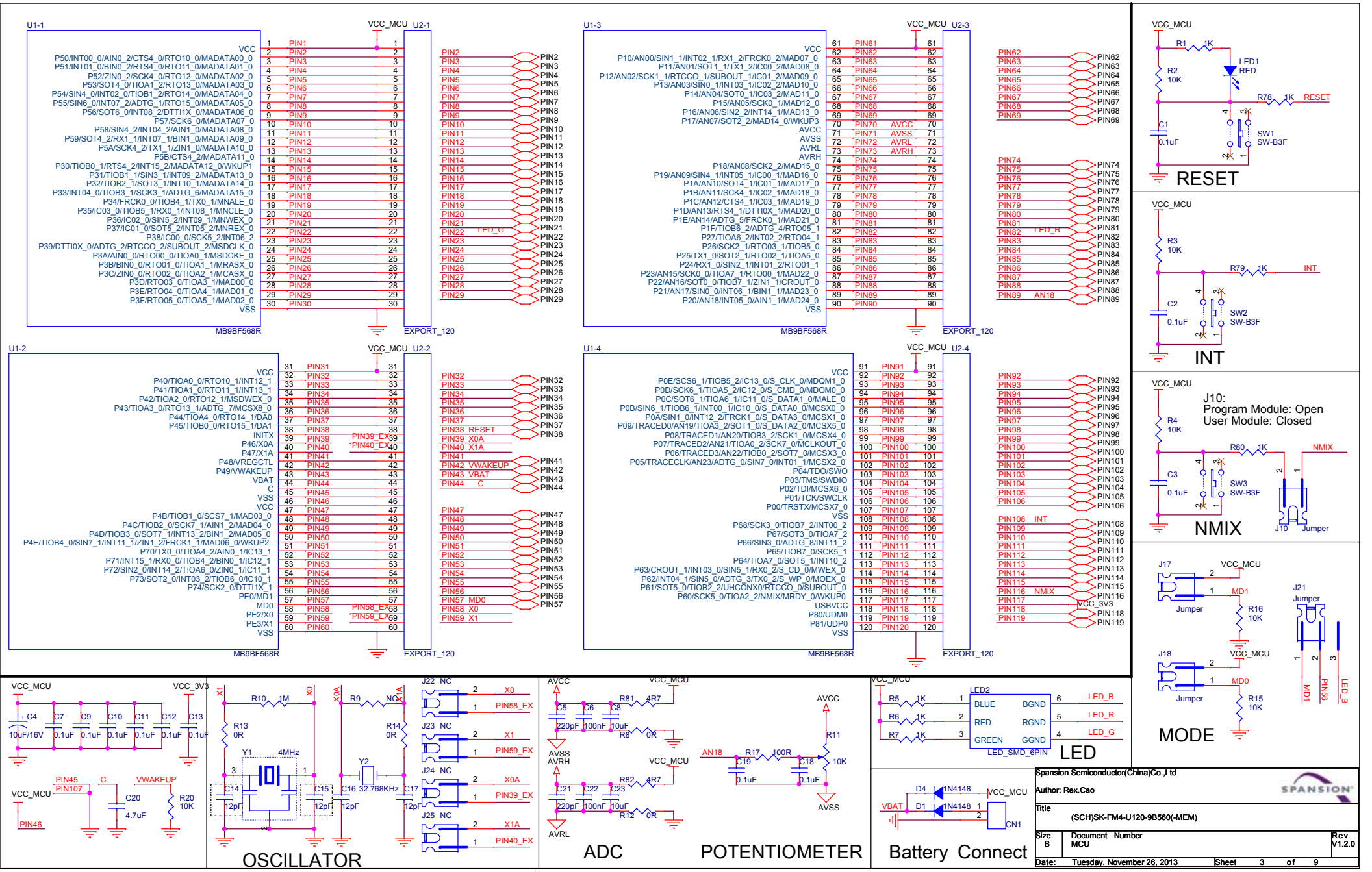
U1-1
U1-2
U1-3
U1-4
MB9BF568R
VCC_MCU
U2-1
U2-2
U2-3
U2-4
EXPORT_120
RESET
INT
NMIX
J10:
Program Module: Open
User Module: Closed
MODE
LED
OSCILLATOR
ADC
POTENTIOMETER
Battery Connect
Spansion Semiconductor(China)Co.,Ltd
Author: Rex.Cao
Title
(SCH)SK-FM4-U120-9B560(-MEM)
Size B
Document Number MCU
Rev V1.2.0
Date: Tuesday, November 26, 2013
Sheet 3 of 9

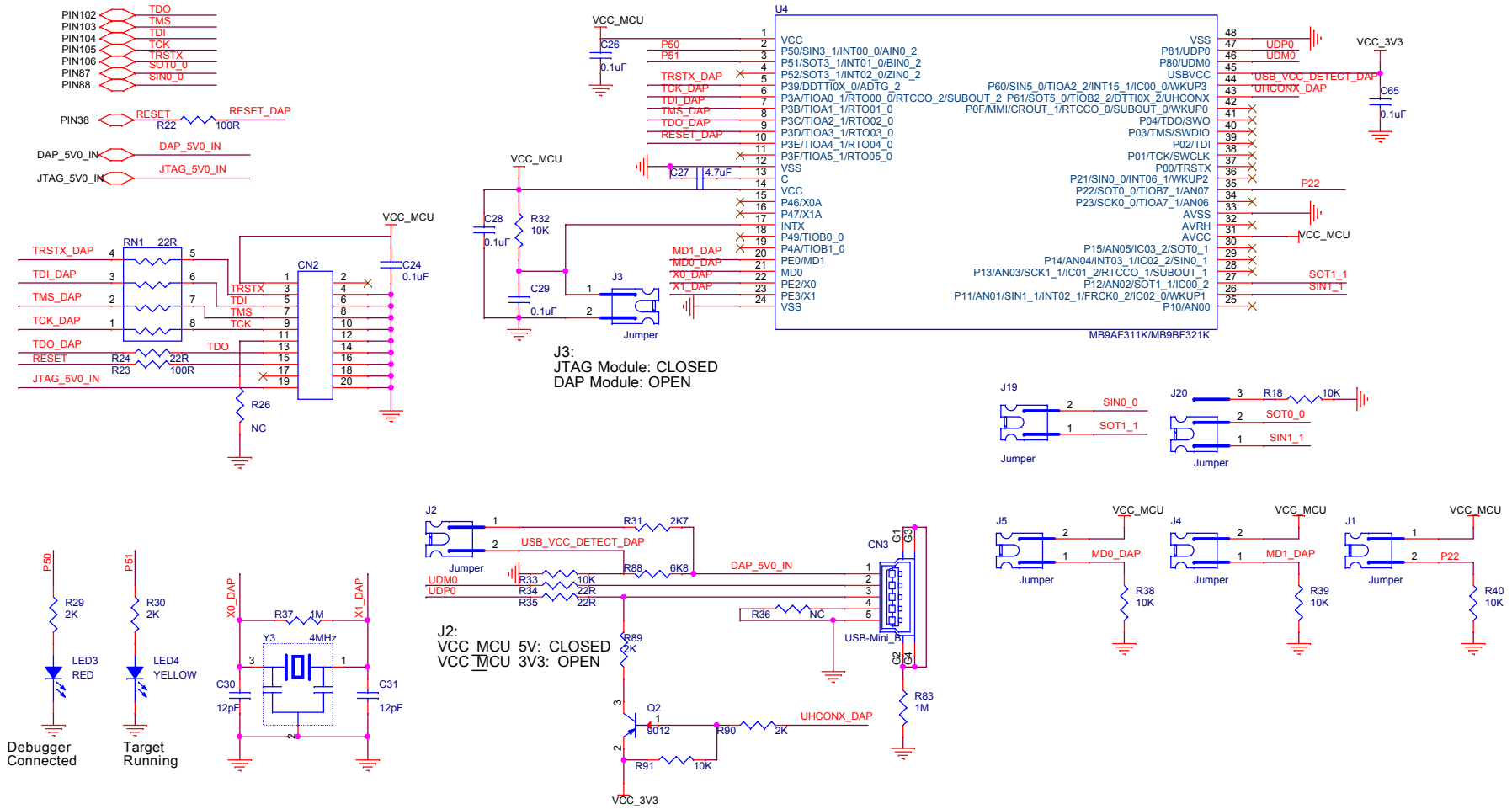

Spansion Semiconductor(China)Co.,Ltd		
Author: Rex.Cao		
Title: (SCH)SK-FM4-U120-9B560(-MEM)		
Size: B	Document Number: JTAG	Rev: V1.2.0
Date: Tuesday, November 26, 2013	Sheet 4 of 9	

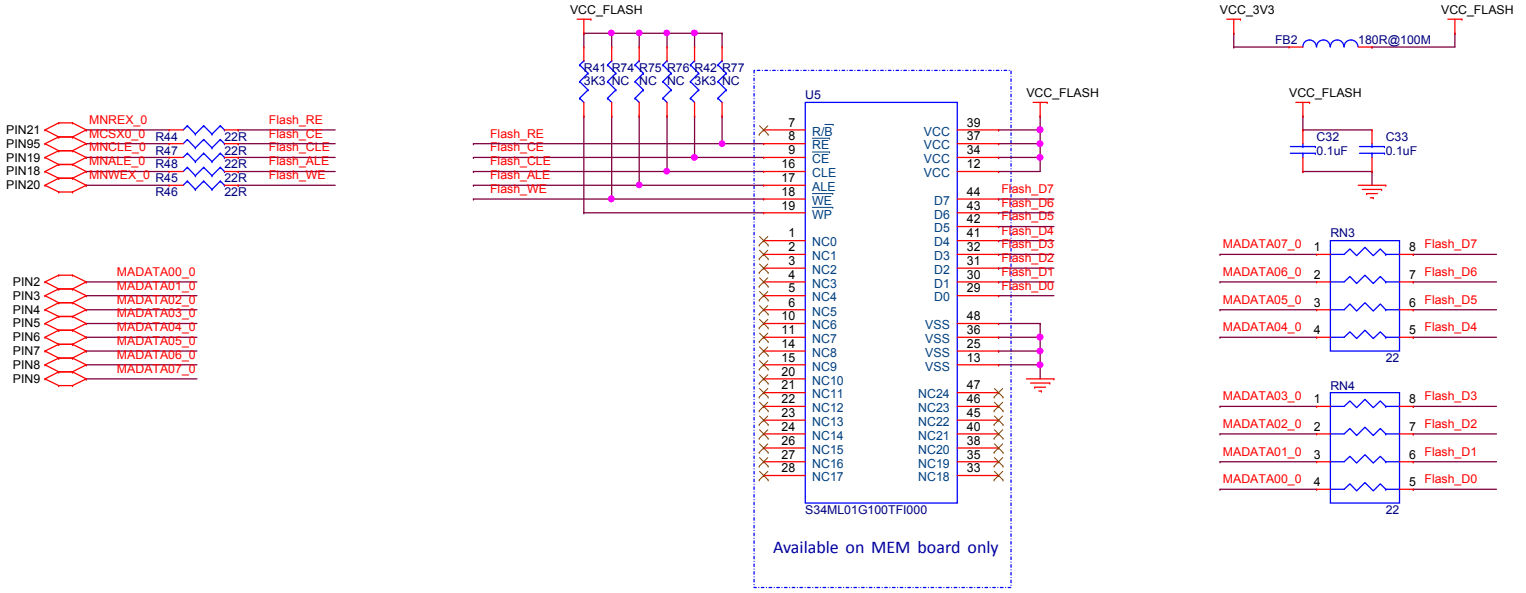

Spansion Semiconductor(China)Co.,Ltd		
Author: Rex.Cao		
Title: (SCH)SK-FM4-U120-9B560(-MEM)		
Size: B	Document Number: NAND FLASH	Rev: V1.2.0
Date: Tuesday, November 26, 2013	Sheet 5 of 9	

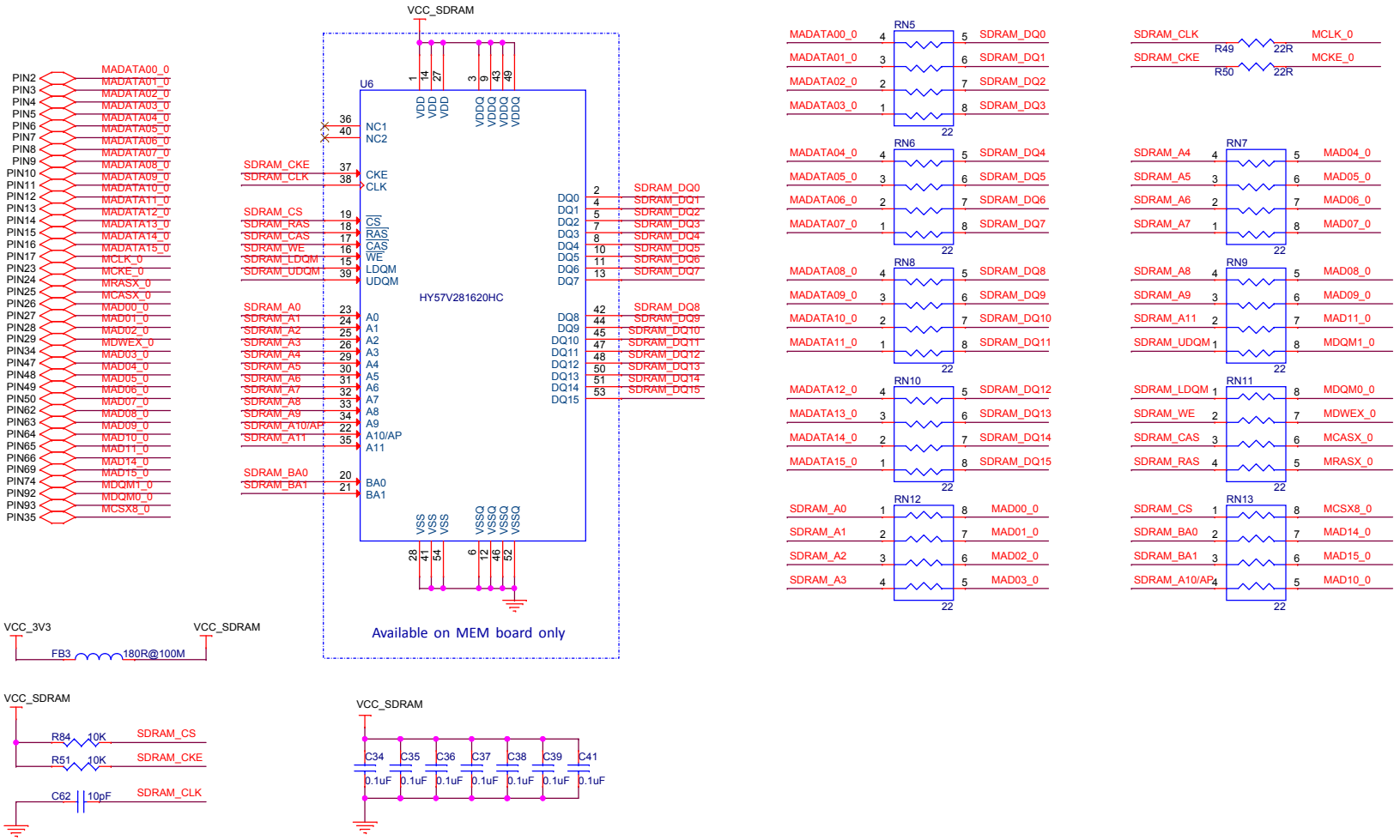

Spansion Semiconductor(China)Co.,Ltd	
Author: Rex.Cao	
Title	(SCH)SK-FM4-U120-9B560(-MEM)
Size B	Document Number SDRAM
Rev	V1.2.0
Date:	Tuesday, November 26, 2013
Sheet	6 of 9

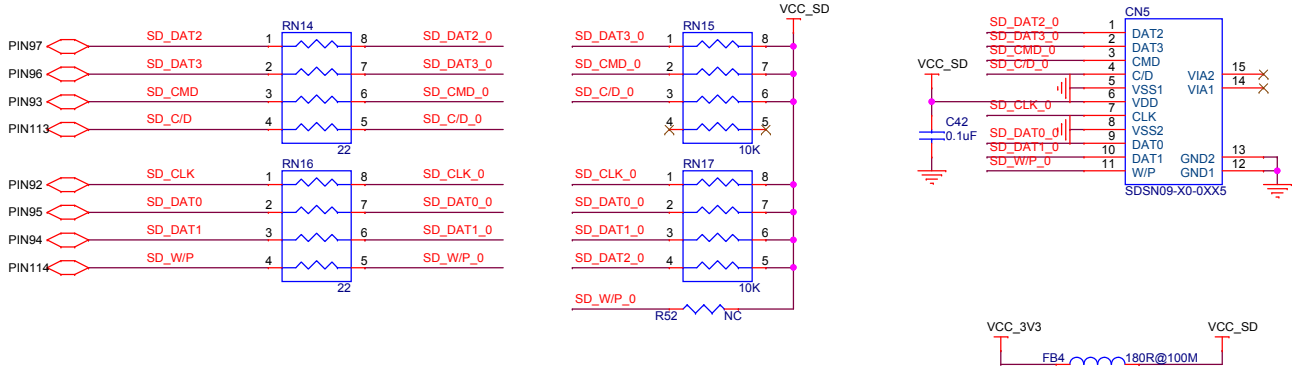

Spansion Semiconductor(China)Co.,Ltd		
Author: Rex.Cao		
Title	(SCH)SK-FM4-U120-9B560(-MEM)	
Size B	Document Number Micro SD	Rev V1.2.0
Date: Tuesday, November 26, 2013	Sheet 7 of 9	

J13:
VCC_MCU 5V: CLOSED
VCC_MCU 3V3: OPEN

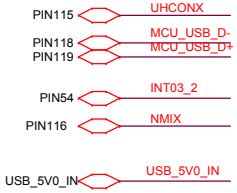

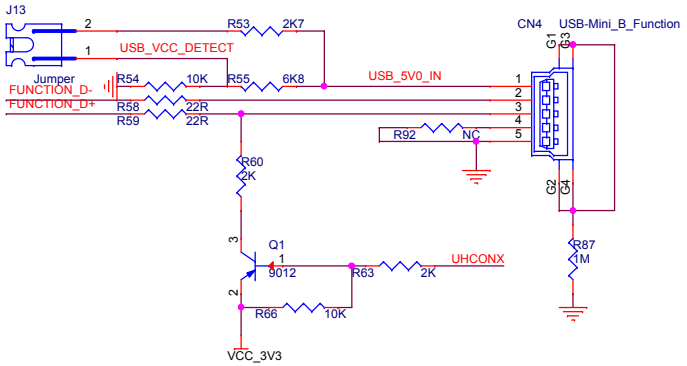

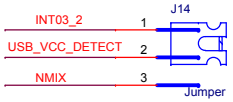

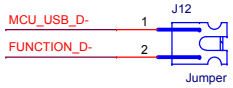

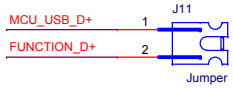

J14:
Program Module: Closed Pin2 to Pin3
User Module: Closed Pin2 to Pin1

J11, J12:
Function: CLOSED
Host: OPEN

Spansion Semiconductor(China)Co.,Ltd		
Author: Rex.Cao		
Title: (SCH)SK-FM4-U120-9B560(-MEM)		
Size: B	Document Number: USB	Rev: V1.2.0
Date: Tuesday, November 26, 2013	Sheet 8 of 9	

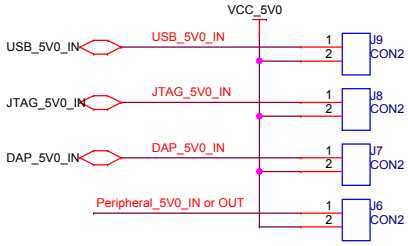

5V Power Select:
USB Function: Closed J9
JTAG Module: Closed J8
DAP Module: Closed J7
Peripheral 5V0 IN or OUT: Closed J6

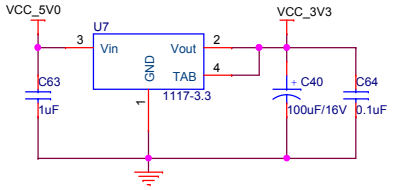

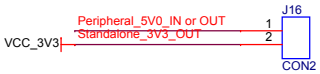

J16: Conect to Peripheral Board
For 5V Input or 5VOutput or 3V3 Output

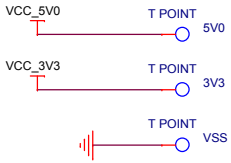

TEST POINT

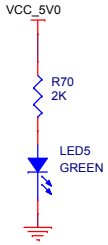

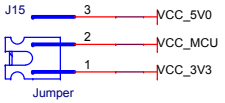

J15:
VCC_MCU 3V3: Closed Pin2 to Pin1
VCC_MCU 5V0: Closed Pin2 to Pin3

Spansion Semiconductor(China)Co.,Ltd		
Author: Rex.Cao		
Title: (SCH)SK-FM4-U120-9B560(-MEM)		
Size: B	Document Number: POWER	Rev: V1.2.0
Date: Tuesday, November 26, 2013	Sheet 9 of 9	