Page	Item	Description
Original document code: MN709-00005-2v0-E		
Rev. 1.0 April 11, 2014		
85	CHAPTER 4	Figure 1-5 Connection example using FUJITSU USB DIRECT Programmer (own power supply is used.)) should be corrected as indicated by the shading below. (Error) 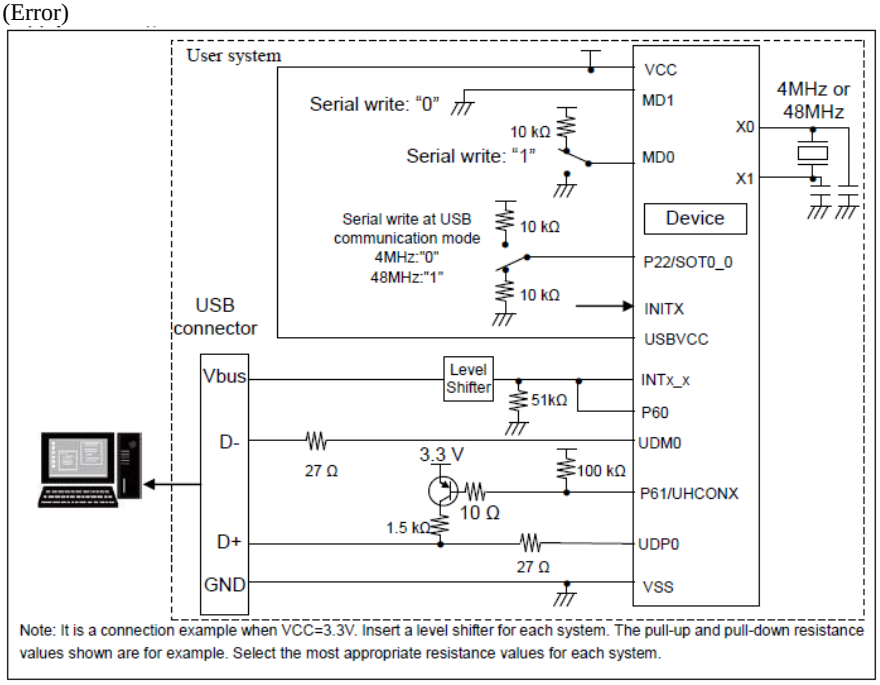 (Correct) 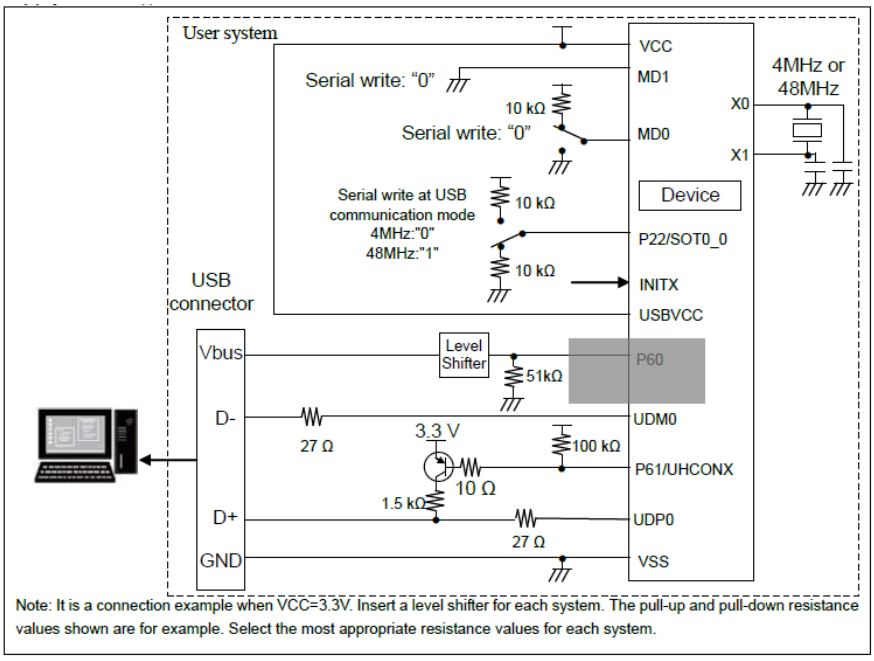

Page	Item	Description
86	CHAPTER 4	Figure 1-6 Connection example using FUJITSU USB DIRECT Programmer bus power supply is used.) should be corrected as indicated by the shading below. (Error) 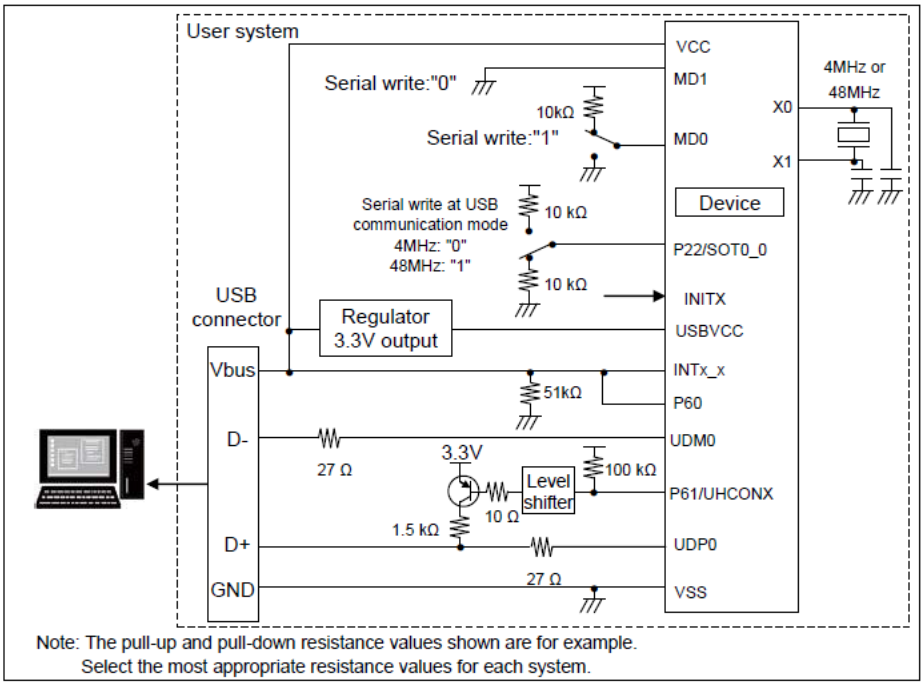 (Correct) 