MB9B560R Series

32-bit Microcontroller
FM4 Family

Fact Sheet

MB9B560R Series are highly integrated 32-bit microcontrollers dedicated for embedded controllers with high-performance and competitive cost. MB9B560R Series are based on the ARM Cortex-M4F Processor with Flash memory and SRAM, and has peripheral functions such as Motor Control Timers, ADCs, DACs and Communication Interfaces.

1. FEATURES

- **ARM Cortex-M4F CPU Core**
  - Processor version : r0p1
  - FPU built-in, Support DSP instruction
- **Clock**
  - Maximum clock frequency : 160MHz
- **Base Timer** : 8 channels (Max.)
- **Watch counter**
- **CRC accelerator**
- **Multi-function Timer** : 2 units (Max.)
  - 16-bit free-run timer ×3 channels/unit
  - Input capture ×4 channels/unit
  - Output compare ×6 channels/unit
  - A/D activation compare ×6 channels/unit
  - Waveform generator ×3 channels/unit
  - 16-bit PPG timer ×3 channels/unit
- **SD Card Interface** : 1 unit
- **QPRC** : 2 channels
- **Dual Timer** : 1 unit
- **Watch dog Timer** : 1 channel (SW) + 1 channel (HW)
- **Multi-function Serial Interface** : 8 channels (Max.)
  - Selectable from UART/CSIO/LIN/I^2C
- **External Bus Interface**
- **Real Time Clock** : 1 unit
- **DMA Controller** : 8 channels
- **DSTC** : 128 channels
- **USB2.0(Function/Host)** : 1 channel
- **CAN** : 2 channel (Max.)
- **External Interrupt Controller Unit**
  - External interrupt input pin : Max. 16 pins
  - Include one non-maskable interrupt (NMI)
- **12-bit A/D Converter** : Max. 24 channels (3 units)
- **12-bit D/A Converter** : 2 channels (Max.)
- **Low Power Consumption Mode**
  - Sleep mode/Timer mode/RTC mode/Stop mode/Deep standby RTC mode/Deep standby stop mode supported
- **General Purpose I/O port**
  - MB9BF566M/F567M/F568M : 63 (Max.)
  - MB9BF566N/F567N/F568N : 80 (Max.)
  - MB9BF566R/F567R/F568R : 100 (Max.)
- **Built-in CR**
- **Unique ID**
- **Debug**
  - Serial Wire JTAG Debug Port (SWJ-DP)
  - Embedded Trace Macrocells (ETM)
- **Low Voltage Detector**
- **Clock Super Visor**
- **Power Supply** : 2.7 to 5.5V

2. PRODUCT LINEUP

Parameter \ Part number	MB9BF 566M/N/R	MB9BF 567M/N/R	MB9BF 568M/N/R
Main Flash (Byte)	512K	768K	1024K
Work Flash (Byte)	32K	32K	32K
RAM (Byte)	64K	96K	128K

3. ORDERING INFORMATION

Part number	Package
MB9BF566MPMC	Plastic・LQFP(0.5mm pitch), 80-pins (FPT-80P-M37)
MB9BF567MPMC	
MB9BF568MPMC	
MB9BF566MPMC1	Plastic・LQFP(0.65mm pitch), 80-pins (FPT-80P-M40)
MB9BF567MPMC1	
MB9BF568MPMC1	
MB9BF566NPMC	Plastic・LQFP(0.5mm pitch), 100-pins (FPT-100P-M23)
MB9BF567NPMC	
MB9BF568NPMC	
MB9BF566RPMC	Plastic・LQFP(0.5mm pitch), 120-pins (FPT-120P-M37)
MB9BF567RPMC	
MB9BF568RPMC	
MB9BF566NBGL	Plastic・PFBGA(0.5mm pitch), 112-pins (BGA-112P-M05)
MB9BF567NBGL	
MB9BF568NBGL	
MB9BF566RBGL	Plastic・PFBGA(0.5mm pitch), 144-pins (BGA-144P-M09)
MB9BF567RBGL	
MB9BF568RBGL	
MB9BF566NPQC	Plastic・QFP(0.65mm pitch), 100-pins (FPT-100P-M36)
MB9BF567NPQC	
MB9BF568NPQC	

Publication Number MB9B560R_NP709-00001 Revision 1.0 Issue Date November 14, 2013

Copyright © 2013 Spansion Inc. All rights reserved. Spansion®, the Spansion logo, MirrorBit®, MirrorBit® Eclipse™, ORNAND™ and combinations thereof, are trademarks and registered trademarks of Spansion LLC in the United States and other countries. Other names used are for informational purposes only and may be trademarks of their respective owners.

4. PACKAGE EXAMPLE OF REFERENCE

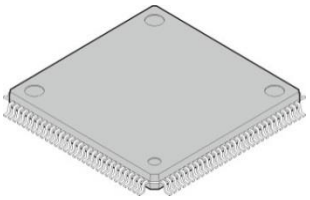

Plastic ・ LQFP、120-pins
(FPT-120P-M37)

5. BLOCK DIAGRAM

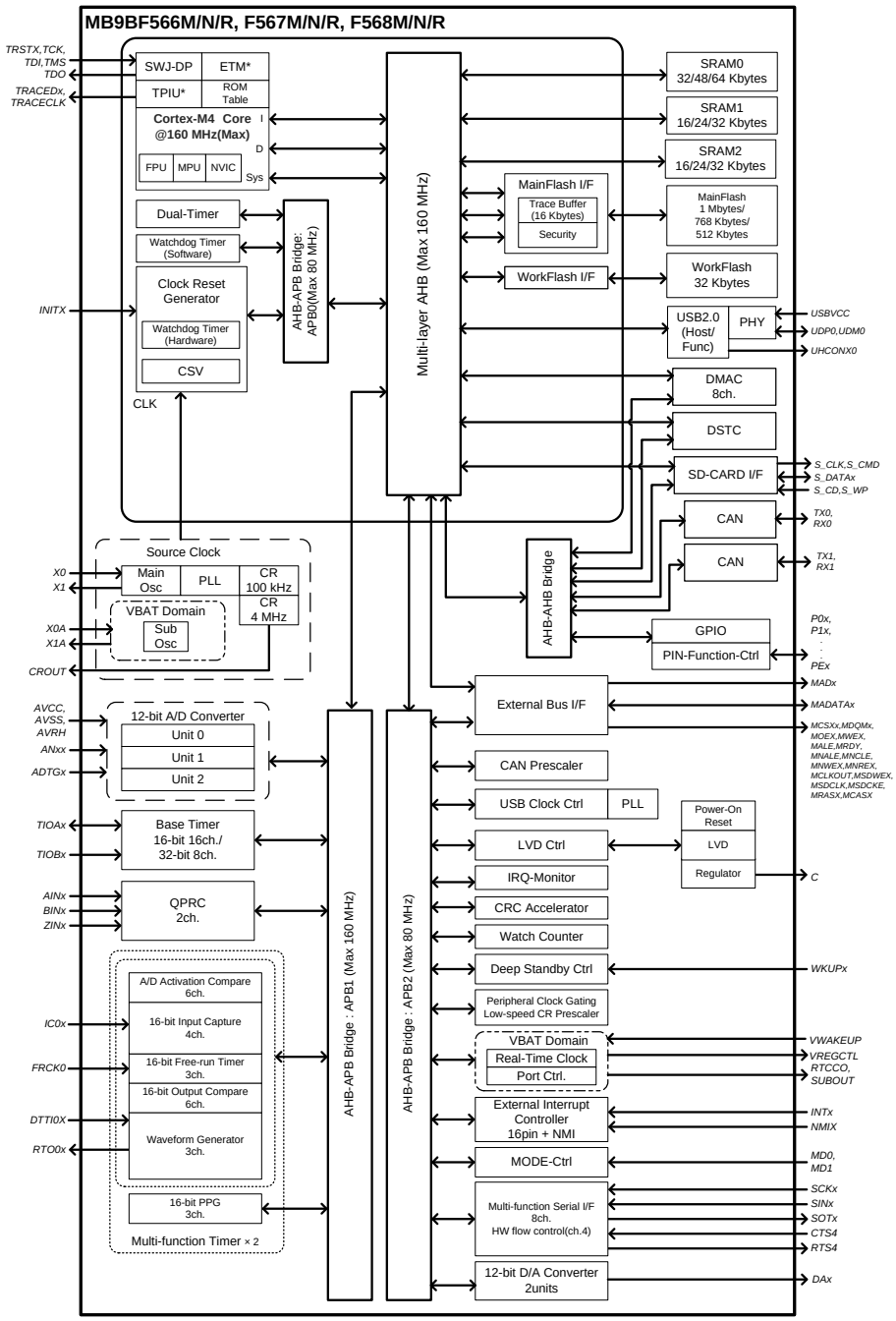

ARM and Cortex are the trademarks of ARM Limited in the EU and other countries.