Spansion® Analog and Microcontroller Products

The following document contains information on Spansion analog and microcontroller products. Although the document is marked with the name “Fujitsu”, the company that originally developed the specification, Spansion will continue to offer these products to new and existing customers.

Continuity of Specifications

There is no change to this document as a result of offering the device as a Spansion product. Any changes that have been made are the result of normal document improvements and are noted in the document revision summary, where supported. Future routine revisions will occur when appropriate, and changes will be noted in a revision summary.

Continuity of Ordering Part Numbers

Spansion continues to support existing part numbers beginning with “MB”. To order these products, please use only the Ordering Part Numbers listed in this document.

For More Information

Please contact your local sales office for additional information about Spansion memory, analog, and microcontroller products and solutions.

Colophon

The products described in this document are designed, developed and manufactured as contemplated for general use, including without limitation, ordinary industrial use, general office use, personal use, and household use, but are not designed, developed and manufactured as contemplated (1) for any use that includes fatal risks or dangers that, unless extremely high safety is secured, could have a serious effect to the public, and could lead directly to death, personal injury, severe physical damage or other loss (i.e., nuclear reaction control in nuclear facility, aircraft flight control, air traffic control, mass transport control, medical life support system, missile launch control in weapon system), or (2) for any use where chance of failure is intolerable (i.e., submersible repeater and artificial satellite). Please note that Spansion will not be liable to you and/or any third party for any claims or damages arising in connection with above-mentioned uses of the products. Any semiconductor devices have an inherent chance of failure. You must protect against injury, damage or loss from such failures by incorporating safety design measures into your facility and equipment such as redundancy, fire protection, and prevention of over-current levels and other abnormal operating conditions. If any products described in this document represent goods or technologies subject to certain restrictions on export under the Foreign Exchange and Foreign Trade Law of Japan, the US Export Administration Regulations or the applicable laws of any other country, the prior authorization by the respective government entity will be required for export of those products.

Trademarks and Notice

The contents of this document are subject to change without notice. This document may contain information on a Spansion product under development by Spansion. Spansion reserves the right to change or discontinue work on any product without notice. The information in this document is provided as is without warranty or guarantee of any kind as to its accuracy, completeness, operability, fitness for particular purpose, merchantability, non-infringement of third-party rights, or any other warranty, express, implied, or statutory. Spansion assumes no liability for any damages of any kind arising out of the use of the information in this document.

Copyright © 2013 Spansion Inc. All rights reserved. Spansion®, the Spansion logo, MirrorBit®, MirrorBit® Eclipse™, ORNAND™ and combinations thereof, are trademarks and registered trademarks of Spansion LLC in the United States and other countries. Other names used are for informational purposes only and may be trademarks of their respective owners.

FUJITSU SEMICONDUCTOR
CONTROLLER MANUAL

MN709-00005-2v0-E

32-BIT MICROCONTROLLER

FM4 Family MB9B560R/460R/360R/160R Series FLASH PROGRAMMING MANUAL

FUJITSU SEMICONDUCTOR LIMITED

Preface

■ Purpose of this manual and intended readers

This manual explains the functions, operations and serial programming of the flash memory of this series.
This manual is intended for engineers engaged in the actual development of products using this series.

■ Trademark

ARM and Cortex are the trademarks of ARM Limited in the EU and other countries.

The company names and brand names herein are the trademarks or registered trademarks of their respective owners.

■ Organization of this Manual

This manual consists of the following 4 chapters.

CHAPTER 1 MainFlash Memory

This chapter gives an overview of, and explains the structure, operation, and registers of the MainFlash memory.

CHAPTER 2 WorkFlash Memory

This chapter gives an overview of, and explains the structure, operation, and registers of the WorkFlash memory.

CHAPTER 3 Flash Security

The flash security feature provides possibilities to protect the content of the flash memory.
This chapter section describes the overview and operations of the flash security.

CHAPTER 4 Serial Programming Connection

This chapter explains the basic configuration for serial write to flash memory by using the Fujitsu Semiconductor Serial Programmer.

■ Sample programs and development environment

Fujitsu Semiconductor offers sample programs free of charge for operating the peripheral functions of the FM4 family. Fujitsu Semiconductor also makes available descriptions of the development environment required for this series. Feel free to use them to verify the operational specifications and usage of this Fujitsu Semiconductor microcontroller.

- Microcontroller support information:
  http://www.spansion.com/Support/microcontrollers/

* : Note that the sample programs are subject to change without notice. Since they are offered as a way to demonstrate standard operations and usage, evaluate them sufficiently before running them on your system.
  Fujitsu Semiconductor assumes no responsibility for any damage that may occur as a result of using a sample program.

- FUJITSU SEMICONDUCTOR LIMITED, its subsidiaries and affiliates (collectively, "FUJITSU SEMICONDUCTOR") reserves the right to make changes to the information contained in this document without notice. Please contact your FUJITSU SEMICONDUCTOR sales representatives before order of FUJITSU SEMICONDUCTOR device.
- Information contained in this document, such as descriptions of function and application circuit examples is presented solely for reference to examples of operations and uses of FUJITSU SEMICONDUCTOR device. FUJITSU SEMICONDUCTOR disclaims any and all warranties of any kind, whether express or implied, related to such information, including, without limitation, quality, accuracy, performance, proper operation of the device or non-infringement. If you develop equipment or product incorporating the FUJITSU SEMICONDUCTOR device based on such information, you must assume any responsibility or liability arising out of or in connection with such information or any use thereof. FUJITSU SEMICONDUCTOR assumes no responsibility or liability for any damages whatsoever arising out of or in connection with such information or any use thereof.
- Nothing contained in this document shall be construed as granting or conferring any right under any patents, copyrights, or any other intellectual property rights of FUJITSU SEMICONDUCTOR or any third party by license or otherwise, express or implied. FUJITSU SEMICONDUCTOR assumes no responsibility or liability for any infringement of any intellectual property rights or other rights of third parties resulting from or in connection with the information contained herein or use thereof.
- The products described in this document are designed, developed and manufactured as contemplated for general use including without limitation, ordinary industrial use, general office use, personal use, and household use, but are not designed, developed and manufactured as contemplated (1) for use accompanying fatal risks or dangers that, unless extremely high levels of safety is secured, could lead directly to death, personal injury, severe physical damage or other loss (including, without limitation, use in nuclear facility, aircraft flight control system, air traffic control system, mass transport control system, medical life support system and military application), or (2) for use requiring extremely high level of reliability (including, without limitation, submersible repeater and artificial satellite). FUJITSU SEMICONDUCTOR shall not be liable for you and/or any third party for any claims or damages arising out of or in connection with above-mentioned uses of the products.
- Any semiconductor devices fail or malfunction with some probability. You are responsible for providing adequate designs and safeguards against injury, damage or loss from such failures or malfunctions, by incorporating safety design measures into your facility, equipments and products such as redundancy, fire protection, and prevention of overcurrent levels and other abnormal operating conditions.
- The products and technical information described in this document are subject to the Foreign Exchange and Foreign Trade Control Law of Japan, and may be subject to export or import laws or regulations in U.S. or other countries. You are responsible for ensuring compliance with such laws and regulations relating to export or re-export of the products and technical information described herein.
- All company names, brand names and trademarks herein are property of their respective owners.

Copyright ©2013 FUJITSU SEMICONDUCTOR LIMITED All rights reserved.

How to Use This Manual

■ Searching for a function

The following methods can be used to search for the explanation of a desired function in this manual:

- Search from the table of the contents
  The table of the contents lists the manual contents in the order of description.

- Search from the register
  The address where each register is located is not described in the text. To verify the address of a register, see "A. Register Map" of "APPENDIXES" in "FM4 Family Peripheral Manual".

■ Terminology

This manual uses the following terminology.

Term	Explanation
Word	Indicates access in units of 32 bits.
Half word	Indicates access in units of 16 bits.
Byte	Indicates access in units of 8 bits.

■ Notations

- The notations in bit configuration of the register explanation of this manual are written as follows.
  - bit : bit number
  - Field : bit field name
  - Attribute : Attributes for read and write of each bit
    - R : Read only
    - W : Write only
    - RW : Readable/Writable
    - - : Undefined
  - Initial value : Initial value of the register after reset
    - 0 : Initial value is "0"
    - 1 : Initial value is "1"
    - X : Initial value is undefined

- The multiple bits are written as follows in this manual.
  Example : bit7:0 indicates the bits from bit7 to bit0

- The values such as for addresses are written as follows in this manual.
  - Hexadecimal number : "0x" is attached in the beginning of a value as a prefix (example : 0xFFFF)
  - Binary number : "0b" is attached in the beginning of a value as a prefix (example : 0b1111)
  - Decimal number : Written using numbers only (example : 1000)

CONTENTS

CHAPTER 1: MainFlash Memory 1
1. Overview 2
2. Configuration 3
3. Operating Description 7
3.1. MainFlash Memory Access Modes 8
3.2. Automatic Algorithm 9
3.2.1. Command Sequence 10
3.2.2. Command Operating Explanations 11
3.2.3. Automatic Algorithm Run States 13
3.3. Explanation of MainFlash Memory Operation 18
3.3.1. Read/Reset Operation 19
3.3.2. Write Operation 20
3.3.3. Flash Erase Operation 22
3.3.4. Sector Erase Operation 23
3.3.5. Sector Erase Suspended Operation 26
3.3.6. Sector Erase Restart Operation 27
3.4. Writing to MainFlash Memory in Products Equipped with ECC 28
3.5. MainFlash Accelerator 29
3.6. Cautions When Using MainFlash Memory 31
4. Registers 32
4.1. FASZR (Flash Access Size Register) 33
4.2. FRWTR (Flash Read Wait Register) 34
4.3. FSTR (Flash Status Register) 35
4.4. FSYNDN (Flash Sync Down Register) 36
4.5. FBFCR (Flash Buffer Control Register) 37
4.6. FICR (Flash Interrupt Control Register) 38
4.7. FISR (Flash Interrupt Status Register) 39
4.8. FICLR (Flash Interrupt Clear Register) 40
4.9. CRTRMM (CR Trimming Data Mirror Register) 41
4.10. FERRAD (Flash ECC ERR Address Capture Register) 42

CHAPTER 2: WorkFlash Memory 43
1. Overview 44
2. Configuration 45
3. Operating Description 46
3.1. WorkFlash Memory Access Modes 47
3.2. Automatic Algorithm 48
3.2.1. Command Sequences 49
3.2.2. Command Operating Explanations 50
3.2.3. Automatic Algorithm Run States 52
3.3. Explanation of WorkFlash Memory Operation 57
3.3.1. Read/Reset Operation 58
3.3.2. Write Operation 59
3.3.3. Flash Erase Operation 61
3.3.4. Sector Erase Operation 62
3.3.5. Sector Erase Suspended Operation 65
3.3.6. Sector Erase Restart Operation 66
3.4. Cautions When Using WorkFlash Memory 67

4. Registers 68
4.1. WFASZR (WorkFlash Access Size Register) 69
4.2. WFRWTR (WorkFlash Read Wait Register) 70
4.3. WFSTR (WorkFlash Status Register) 71

CHAPTER 3: Flash Security 73
1. Overview 74
2. Operation Explanation 75

CHAPTER 4: Serial Programming Connection 77
1. Serial Programmer 78
1.1. Basic Configuration 79
1.2. Pins Used 84

MAJOR CHANGES IN THIS EDITION

A change on a page is indicated by a vertical line drawn on the left side of that page.

Page	Section	Changes
7	CHAPTER 1: MainFlash Memory 2. Configuration	・Revised Figure 2-4 ・Added Figure 2-5
42	CHAPTER 1: MainFlash Memory 4. Registers 4.9. CRTRMM (CR Trimming Data Mirror Register)	Revised the description of “TTRMM” and “TRMM”
82 to 86	CHAPTER 4: Serial Programming Connection 1.1 Basic Configuration	・Added new section ■Connection Example of FUJITSU SEMICONDUCTOR MCU Programmer ●When Crystal oscillator is used as the source oscillation clock ●When built-in high-speed CR oscillator is used as a source oscillation clock ・Added Figure 1-3 ・Revised Figure 1-5 ・Revised Figure 1-6

CHAPTER : MainFlash Memory

This series is equipped with 512 KBytes to 1024 KBytes of MainFlash memory and 32KBytes of WorkFlash memory.
This chapter gives an overview of, and explains the structure, operation, and registers of the MainFlash memory.
See “CHAPTER WorkFlash Memory” for details of the WorkFlash memory. This series has built-in MainFlash memory with a capacity of 512 KBytes to 1024 KBytes that supports data erasing by all sectors, data erasing by unit of sector, and data writing by the CPU.
Contents described with “flash memory” are information for the MainFlash memory in this chapter.

1. Overview
2. Configuration
3. Operating Description
4. Registers

Code : 9BF560R_FLASH-E01.0

1. Overview

This series is equipped with 512 KBytes to 1024 KBytes of built-in MainFlash memory.
The built-in MainFlash memory can be erased data of sector-by-sector, all-sector batch erased data, and programmed data in units of half words (16 bits) by the Cortex-M4 CPU.
This flash memory also has built-in ECC (Error Correction Code) functionality.

■ Flash Memory Features

- Usable capacity:
  Minimum configuration: 512Kbytes
  Maximum configuration: 1024Kbytes
  Because this series stores ECC codes, it is equipped with additional flash memory of 7 bits for every 4 bytes of memory described above.

- High-speed flash:
  Up to 72MHz 0Wait
  Up to 160MHz Allowing Flash accelerator function (prefetch buffer/trace buffer) will achieve 0 Wait at high speed operational frequency

- Operating mode:
  1. CPU ROM mode
     This mode only allows reading of flash memory data. Word access is available. However, in this mode, it is not possible to activate the automatic algorithm[*1] to perform writing or erasing.

  2. CPU programming mode
     This mode allows reading, writing, and erasing of flash memory (automatic algorithm[*1]). Because word access is not available, programs that are contained in the flash memory cannot be executed while operating in this mode. Half-word access is available.

  3. ROM writer mode
     This mode allows reading, writing, and erasing of flash memory from a ROM writer (automatic algorithm[*1]).

- Built-in flash security function
  (Prevents reading of the content of flash memory by a third party)
  See "CHAPTER Flash Security" for details on the flash security function.

- Equipped with an Error Correction Code (ECC) function that can correct up to 1 bit of errors in each word.(The device is not equipped with a function to detect 2-bit errors.) Errors are automatically corrected when memory is read.
  Furthermore, ECC codes are automatically added upon writing to flash memory. Because there are no read cycle penalties as a result of error correction, it is not necessary to consider the error correction penalties during software development.

<Note>

This document explains flash memory in the case where it is being used in CPU mode.
For details on accessing the flash memory from a ROM writer, see the instruction manual of the ROM writer that is being used.

*1 : Automatic algorithm = Embedded Algorithm

2. Configuration

This series consists of 512 KBytes to 1024 KBytes MainFlash memory area, a security code area, and a High-Speed CR trimming data area.

Figure 2-1 to Figure 2-4 shows the address and sector structure of the MainFlash memory built into this series as well as the address of security/CR trimming data.

See "CHAPTER Flash Security" for details on the security.

See Section "4.9 CRTRMM (CR Trimming Data Mirror Register)" and CHAPTER High-Speed CR Trimming" of the "FM4 Family Peripheral Manual" for details on the High-Speed CR trimming.

Table 2-1 MainFlash memory capacity of each product

memory capacity	512KB	768KB	1024KB
product	MB9BF166	MB9BF167	MB9BF168
	MB9BF366	MB9BF367	MB9BF368
	MB9BF466	MB9BF467	MB9BF468
	MB9BF566	MB9BF567	MB9BF568

Figure 2-1 Memory map of MainFlash memory 512KB

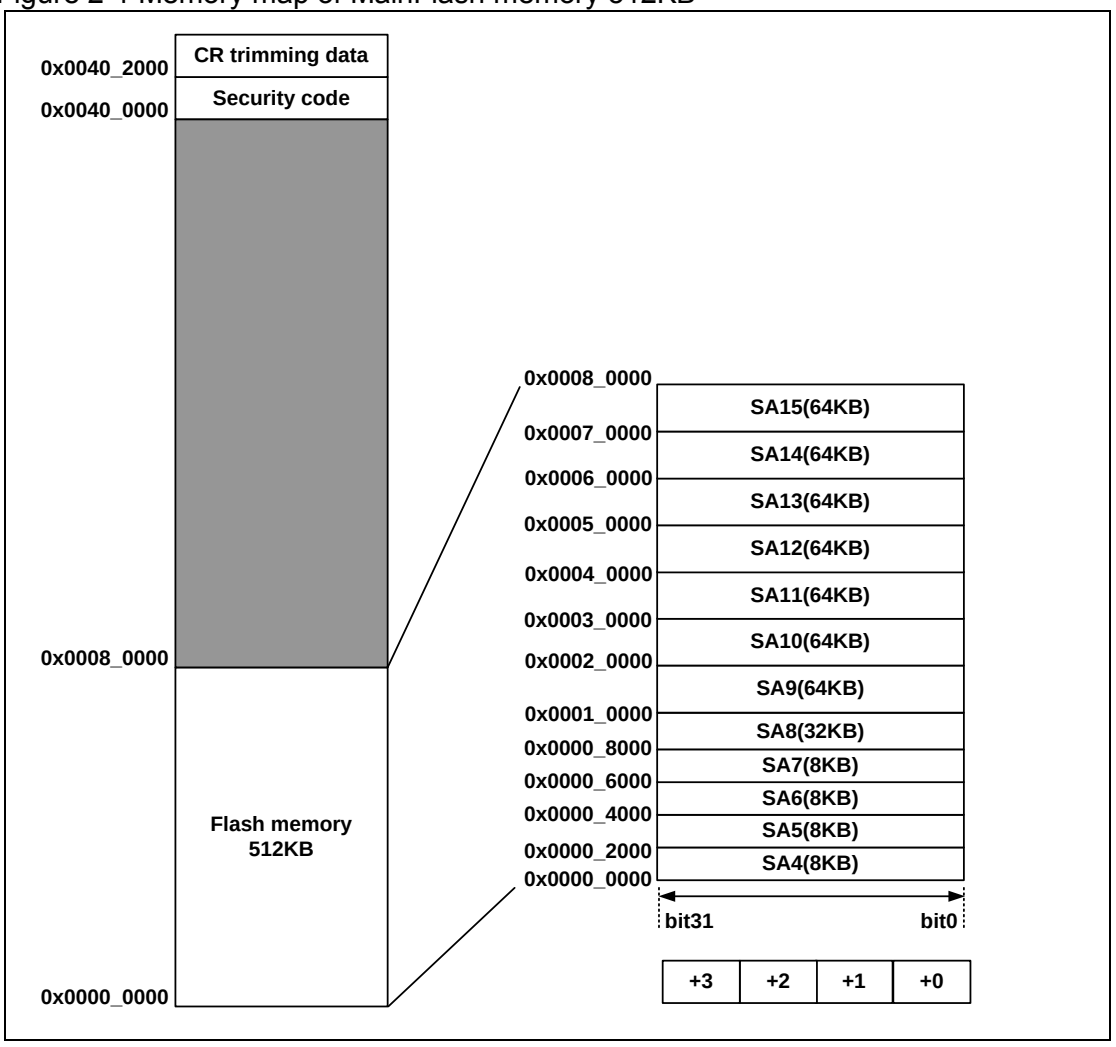

Figure 2-2 Memory map of MainFlash memory 768KB

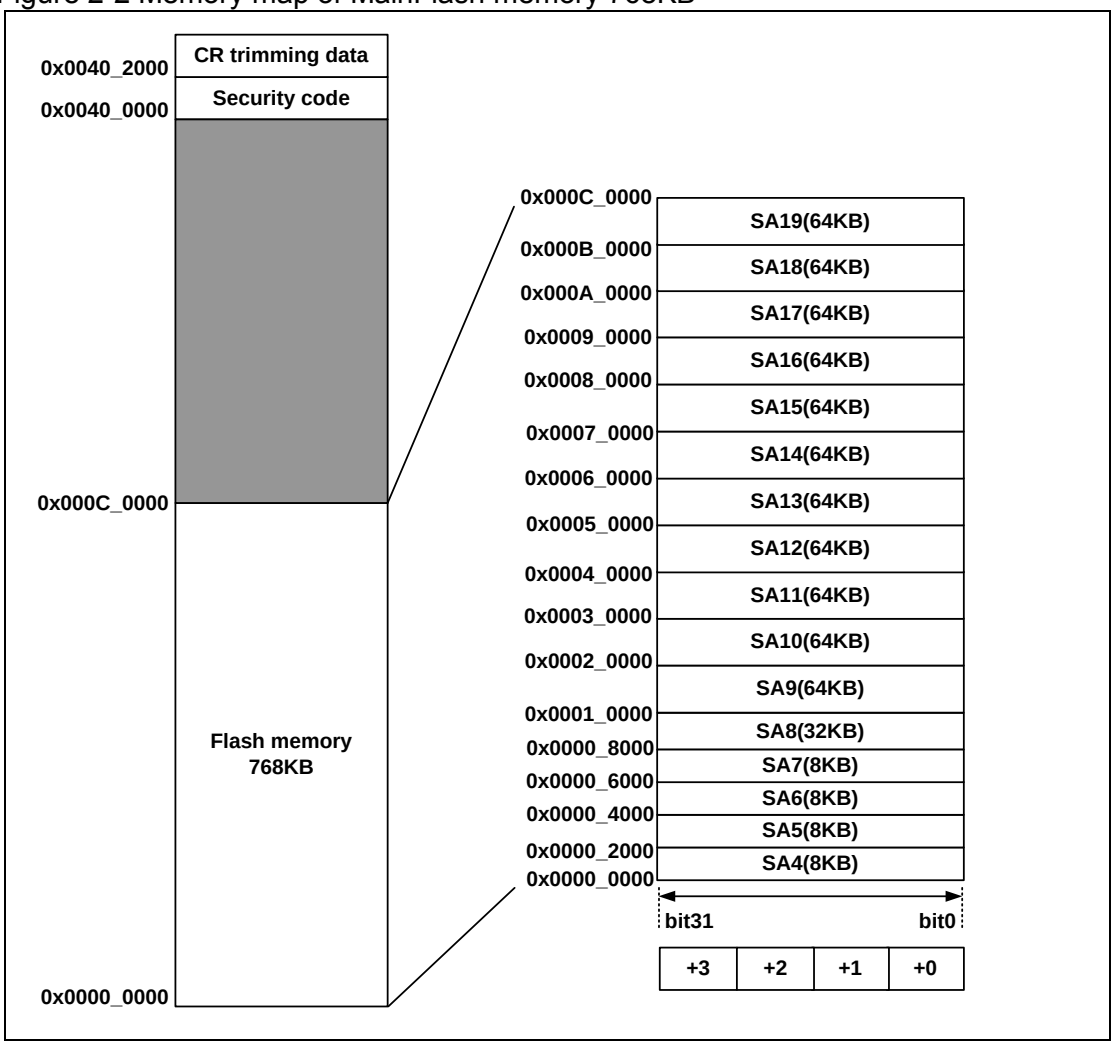

Figure 2-3 Memory map of MainFlash memory 1024KB

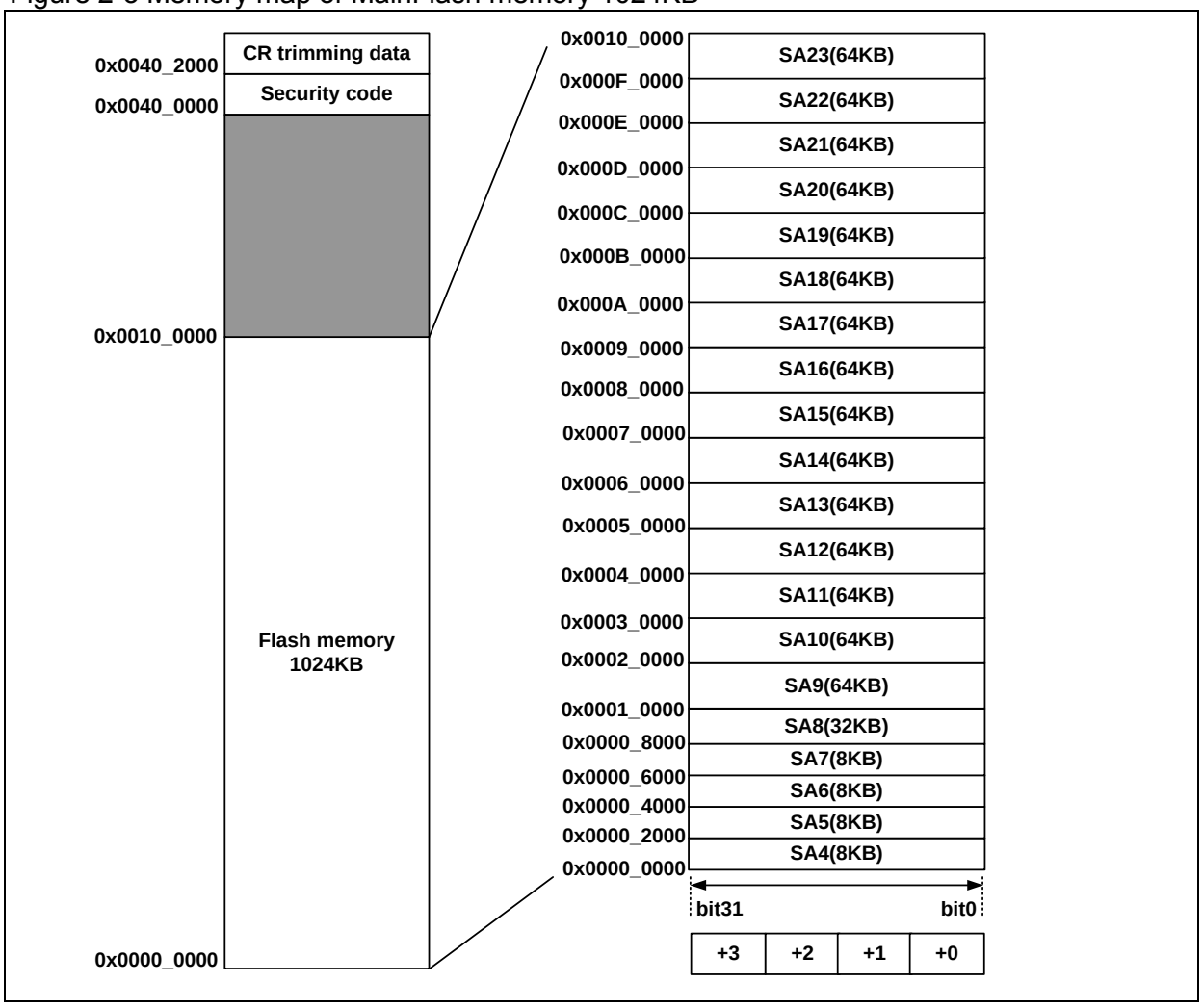

Figure 2-4 Address of security/CR Trimming data

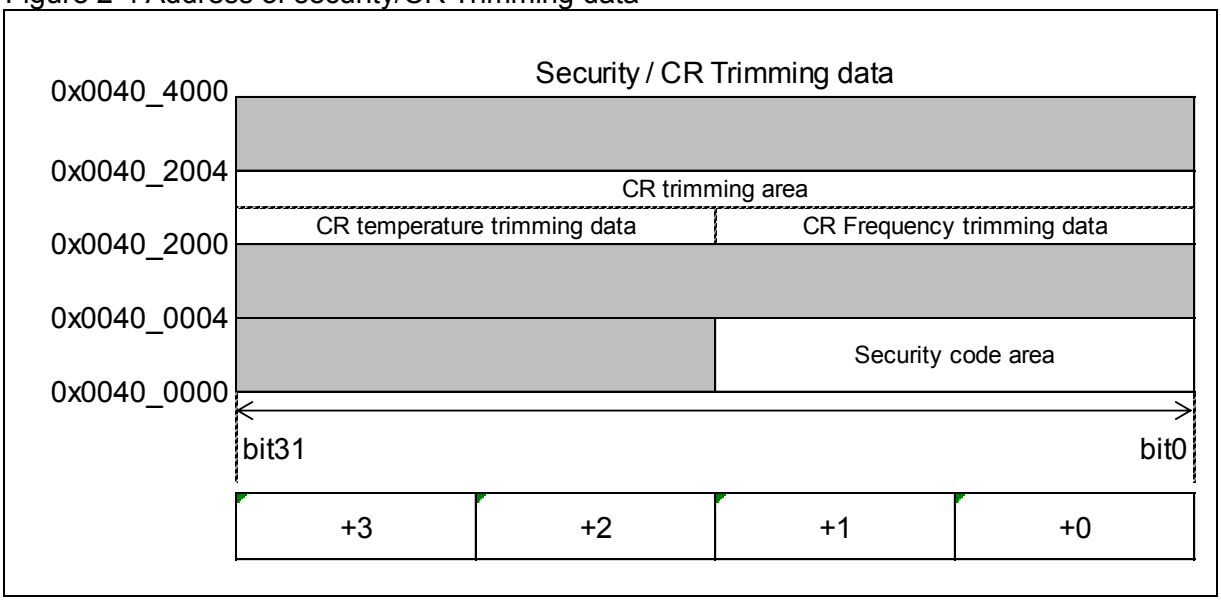

Figure 2-5 Bit configuration of the CR Trimming area

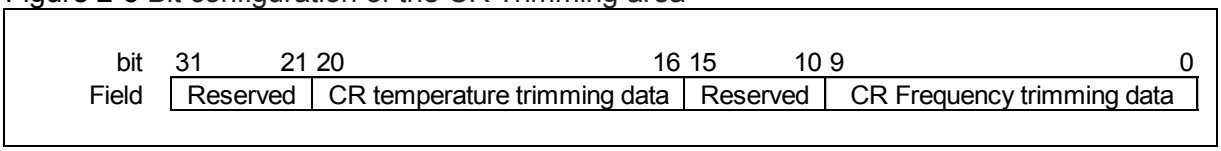

3. Operating Description

This section explains the MainFlash memory operation.

3.1 MainFlash Memory Access Modes

3.2 Automatic Algorithm

3.3 Explanation of MainFlash Memory Operation

3.4 Writing to MainFlash Memory in Products Equipped with ECC

3.5 MainFlash Accelerator

3.6 Cautions When Using MainFlash Memory

3.1. MainFlash Memory Access Modes

The following two access modes are available for accessing MainFlash memory from the CPU.

- CPU ROM mode
- CPU programming mode

These modes can be selected by the flash access size bits (FASZR:ASZ).

■ CPU ROM Mode

This mode only allows reading of flash memory data.
This mode is entered by setting the flash access size bits (FASZR:ASZ) to "10" (32-bit read), and enables word access.

However, in this mode, it is not possible to execute commands, to activate the automatic algorithm or to write or erase data.

The flash memory always enters this mode after reset is released.

■ CPU Programming Mode

This mode allows reading, writing, and erasing of data.
This mode is entered by setting the flash access size bits (FASZR: ASZ) to "01" (16-bit read/write), and enables flash programming.

Because word access is not possible in this mode, programs that are contained in the flash memory cannot be executed. The operation while in this mode is as follows.

· During reading
Flash memory is accessed in half-words, with data read out in blocks of 16 bits.

· During writing commands
The automatic algorithm can be activated to write or erase data. See Section "3.2 Automatic Algorithm" for details on the automatic algorithm.

Table 3-1 Access modes of Flash memory

Access Mode	Access Size	Automatic Algorithm	Instruction execution in the Flash Memory
CPU ROM mode	32-bit	disable	enable
CPU programming mode	16-bit	enable	Prohibited

<Note>

The flash memory is always set to CPU ROM mode when a reset is released. Therefore, if a reset occurs after entering CPU programming mode, the flash access size bits (FASZR:ASZ) are set to "10" and the flash memory returns to CPU ROM mode.

3.2. Automatic Algorithm

When CPU programming mode is used, writing to and erasing MainFlash memory is performed by activating the automatic algorithm.
This section explains the automatic algorithm.

3.2.1 Command Sequence

3.2.2 Command Operating Explanations

3.2.3 Automatic Algorithm Run States

3.2.1. Command Sequence

The automatic algorithm is activated by sequentially writing half-word (16-bit) data to the MainFlash memory one to six times in a row. This is called a command. Table 3-2 shows the command sequences.

Table 3-2 Command sequence chart

Command	No. of writes	1st write		2nd write		3rd write		4th write		5th write		6th write	
		Address	Data	Address	Data	Address	Data	Address	Data	Address	Data	Address	Data
Read/ Reset	1	0xXXX	0xF0	--	--	--	--	--	--	--	--	--	--
Write	4	0xAA8	0xAA	0x554	0x55	0xAA8	0xA0	PA	PD	--	--	--	--
Flash erase	6	0xAA8	0xAA	0x554	0x55	0xAA8	0x80	0xAA8	0xAA	0x554	0x55	0xAA8	0x10
Sector erase	6	0xAA8	0xAA	0x 554	0x55	0xAA8	0x80	0xAA8	0xAA	0x554	0x55	SA	0x30
Sector erase suspended	1	0xXXX	0xB0	--	--	--	--	--	--	--	--	--	--
Sector erase restarting	1	0xXXX	0x30	--	--	--	--	--	--	--	--	--	--

X: Any value
PA: Write address
SA: Sector address (Specify any address within the address range of the sector to erase)
PD: Write data

<Notes>

- In Table 3-2, the data notation only shows the lower 8 bits. The upper 8 bits can be set to any value.
- Write commands as half-words at any time.
- In Table 3-2, the address notation only shows the lower 16 bits. The upper 16 bits should be set to any address within the address range of the target flash memory. When the address outside the flash address range is specified, the command sequence would not operate correctly since the flash memory cannot recognize the command.
- For the address when setting the flash security code, specify the address of "0x0040_0000".
- For the address when setting or erasing the CR trimming data, specify the address of "0x0040_2000".

3.2.2. Command Operating Explanations

This section explains the command operating.

■ Read/Reset Command

The flash memory can be read and reset by sending the read/reset command to the target sector in sequence.

When a read/reset command is issued, the flash memory maintains the read state until another command is issued.

When the execution of the automatic algorithm exceeds the time limit, the flash memory is returned to the read/reset state by issuing the read/reset command.

See Section "3.3.1 Read/Reset Operation" for details on the actual operation.

■ Program (Write) Command

The automatic algorithm can be activated and the data is written to the flash memory by issuing the write command to the target sector in four consecutive writes. Data writes can be performed in any order of addresses, and may also cross sector boundaries.
In CPU programming mode, data is written in half-words.
Once the forth command issuance has finished, the automatic algorithm is activated and the automatic write to the flash memory starts. After executing the automatic write algorithm command sequence, there is no need to control the flash memory externally.
See Section "3.3.2 Write Operation" for details on the actual operation.

<Notes>

- The command is not recognized properly if the fourth write command (write data cycle) is issued to an odd address. Always issue it to an even address.
- Only a single half-word of data can be written for each write command sequence.
  To write multiple pieces of data, issue one write command sequence for each piece of data.

■ Flash Erase Command

All of the sectors in flash memory can be batch-erased by sending the flash erase command to the target sector in six consecutive writes. Once the sixth sequential write has finished, the automatic algorithm is activated and the flash erase operation starts.

■ Sector Erase Command

A single sector of flash memory can be erased by sending the sector erase command to the target sector in six consecutive writes. Once the sixth sequential write has finished and 35 µs has elapsed (timeout interval), the automatic algorithm is activated and the sector erase operation begins.
To erase multiple sectors, issue the sector erase code (0x30) which is the sixth write code of the sector erase command to the address of the sector to erase within 35 µs (timeout interval). If the sector erase code is not issued within the timeout interval, the sector erase code added after the timeout interval has elapsed may become inactive.

■ Sector Erase Suspended Command

By issuing the sector erase suspended command during sector erase or during command timeout, sector erase can be suspended. In the sector erase suspended state, the read operation of memory cells of the sector not to erase is made possible.
See Section "3.3.5 Sector Erase Suspended Operation" for details on the actual operation.

<Note>

This command is only valid during sector erase. It is ignored even if it is issued during flash erase or during write.

■ Sector Erase Restart Command

In order to restart the erase operation in the sector erase suspended state, issue the sector erase restart command. Issuing the sector erase restart command returns the flash memory to the sector erase state and restarts the erase operation.
See Section "3.3.6 Sector Erase Restart Operation" for details on the actual operation.

<Note>

This command is only valid during sector erase suspended. It is ignored even if it is issued during sector erase.

3.2.3. Automatic Algorithm Run States

Because writing and erasing of flash memory is performed by the automatic algorithm, whether or not the automatic algorithm is currently executing can be checked using the flash ready bit (FSTR:RDY) and the operating status can be checked using the hardware sequence flags.

■ Hardware Sequence Flags

These flags indicate the status of the automatic algorithm. When the flash ready bit (FSTR:RDY) is "0", the operating status can be checked by reading any address in flash memory.

Figure 3-1 shows the bit structure of the hardware sequence flags.

Figure 3-1 Bit structure of the hardware sequence flags

In the event of half-word access

bit	15	14	13	12	11	10	9	8
	Undefined	Undefined	Undefined	Undefined	Undefined	Undefined	Undefined	Undefined

bit	7	6	5	4	3	2	1	0
	DPOL	TOGG	TLOV	Undefined	SETI	TOGG2	Undefined	Undefined

In the event of byte access

bit	7	6	5	4	3	2	1	0
	DPOL	TOGG	TLOV	Undefined	SETI	TOGG2	Undefined	Undefined

<Notes>

- These flags cannot be read using word access. When in CPU programming mode, always read using half-word or byte access.
- In CPU ROM mode, the hardware sequence flags cannot be read no matter which address is read.
- Because the correct value might not be read out immediately after issuing a command, ignore the first value of the hardware sequence flags that is read after issuing a command.

● Status of each bit and MainFlash memory

Table 3-3 shows the correspondence between each bit of the hardware sequence flags and the status of the flash memory.

Table 3-3 List of hardware sequence flag states

State				DPOL	TOGG	TLOV	SETI	TOGG2
Running	Automatic write operation			Inverted data (*1)	Toggle	0	0	0
	Automatic Erase operation	Flash erase		0	Toggle	0	1	Toggle
		Sector erase	timeout interval	0	Toggle	0	0	Toggle
			erase	0	Toggle	0	1	Toggle
		Sector erase suspended	Read (Sector to be erased)	0	0	0	1	Toggle
			Read (Sector not to be erased)	Data (*1)	Data (*1)	Data (*1)	Data (*1)	Data (*1)
			Automatic write operation (Sector not to be erased)	Inverted data (*1)	Toggle	0	1	0
Time limit exceeded	Automatic write operation			Inverted data (*1)	Toggle	1	0	0
	Automatic erase			0	Toggle	1	1	Toggle

*1: See "• Bit Descriptions" for the values that can be read.

● Bit Descriptions

[bit15:8] Undefined bits

[bit7] DPOL: Data polling flag b

When the hardware sequence flags are read, by specifying an arbitrary address, this bit uses a data polling function to indicate whether or not the automatic algorithm is currently running.
The value that is read out varies depending on the operating state.

- During writing
  - While write is in progress:
    Reads out the opposite value (inverse data) of bit7 of data written at the last command sequence (PD).
    This does not access the address that was specified for reading the hardware sequence flags.
  - After write finishes:
    Reads out the value of bit7 of the address specified for reading the hardware sequence flags.
- During sector erase
  - While sector erase is executing:
    Reads out "0" from all areas of flash memory.
  - After sector erase finishes:
    Always reads out "1".
- During flash erase
  - While flash erase is executing: Always reads out "0".
  - After flash erase: Always reads out "1".
- During sector erase suspended
  - When this bit is read out by specifying an address in the sector specified as sector erase:
    Reads out "0".
  - When this bit is read out by specifying an address in the sector other than specified as sector erase:
  - Reads out the value of bit7 of a specified address.

- While write is in progress:
  Reads out the opposite value (inverse data) of bit7 of data written at the last command sequence (PD).
  This does not access the address that was specified for reading the hardware sequence flags.

<Note>

The data for a specified address cannot be read while the automatic algorithm is running. Confirm that the automatic algorithm has finished running by using this bit before reading data.

[bit6] TOGG: Toggle Flag Bit

When the hardware sequence flags are read by specifying an arbitrary address, this bit indicates whether or not the automatic algorithm is currently running.
The value that is read out varies depending on the operating state.

- During write, sector erase, or flash erase
  - During write, sector erase, or flash erase:
  - When this bit is read out continuously, it alternatingly returns "1" and "0" (toggles). The address that was specified for reading the hardware sequence flags is not accessed.

  - After write, sector erase, or flash erase has finished:
  - Reads out the value of bit 6 of the address specified for reading the hardware sequence flags.

- During sector erase suspended
  - When this bit is read out by specifying an address in the sector specified as sector erase:
    Reads out "0".

  - When this bit is read out by specifying an address in the sector other than specified as sector erase:
    Reads out the value of bit6 of a specified address.

  - While write is in progress:
    When this bit is read out continuously, it alternatingly returns "1" and "0" (toggles). The address that was specified for reading the hardware sequence flags is not accessed

[bit5] TLOV: Timing Limit Exceeded Flag Bit

When the hardware sequence flags are read by specifying an arbitrary address, this bit indicates whether or not the execution time of the automatic algorithm has exceeded the rated time defined internally within the flash memory (number of internal pulses).
The value that is read out varies depending on the operating state.

- During write, sector erase, or flash erase
  The following values are read out.

  0: Within the rated time
  1: Rated time exceeded

  When this bit is "1", if the DPOL bit and TOGG bit indicate that the automatic algorithm is currently executing, that means a failure occurred during the write or erase.

  For example, because data that has been written to "0" cannot be overwritten to "1" in flash memory, if "1" is written to an address that has been written to "0", the flash memory is locked and the automatic algorithm does not finish. In this case, the value of the DPOL bit remains invalid, and "1" and "0" are continuously read out alternatingly from the TOGG bit.
  Once the rated time is exceeded while still in this state, this bit changes to "1". If this bit changes to "1", issue the reset command.

- During sector erase suspended
  - When this bit is read out by specifying an address in the sector specified as sector erase:
    Reads out "0".
  - When this bit is read out by specifying an address in the sector other than specified as sector erase:
    Reads out the value of bit5 of a specified address.
  - During writing:
    The following values are read out.

    0: Within the rated time
    1 : Rated time exceeded

When this bit is "1", if the DPOL bit and TOGG bit indicate that the automatic algorithm is currently executing, that means a failure occurred during the write or erase.

<Note>

If this bit is "1", it indicates that the flash memory was not used correctly. This is not a malfunction of the flash memory.
Perform the appropriate processing after issuing the reset command.

[bit4] Undefined bit

[bit3] SETI: Sector Erase Timer Flag Bit

When a sector is erased, a timeout interval of 35 μs is required from when the sector erase command is issued until the sector erase actually begins.
When the hardware sequence flags are read by specifying an arbitrary address, this bit indicates whether or not the flash memory is currently in the sector erase command timeout interval.
The value that is read out varies depending on the operating state.

- During sector erase:
  When sectors are being erasing, it can be checked whether or not the following sector erase code can be accepted by checking this bit before inputting the following sector erase code.
  The following values are read out without accessing the address specified in order to read the hardware sequence flags.

  0: Within sector erase timeout interval
  The following sector erase code (0x30) can be accepted.

  1: Sector erase timeout interval exceeded
  In this case, if the DPOL bit and TOGG bit indicate that the automatic algorithm is currently executing, the erase operation has started internally within the flash memory. In this case, commands other than the sector erase suspended (0xB0) are ignored until the internal flash memory erase operation has finished.
- During sector erase suspended
  - When this bit is read out by specifying an address in the sector specified as sector erase:
    Reads out "1".
  - When this bit is read out by specifying an address in the sector other than specified as sector erase:
    Reads out the value of bit3 of a specified address.
  - During writing:
    Reads out "1".

[bit2] TOGG2: Toggle flag bit

In the sector erase suspended state, a sector which is not the erase target can be read. However, the erase target sector cannot be read. This toggle bit flag can detect whether the corresponding sector is the erase target sector during the sector erase suspend by checking the toggle operation of the read data.

- During writing
  Reads out "0".
- During sector erase or flash erase
  When this bit is read out continuously, "1" and "0" are alternately read (toggle operation).
- During sector erase suspended
  - When this bit is read out by specifying an address in the sector specified as sector erase:
    When this bit is read out continuously, "1" and "0" are alternately read (toggle operation)
  - When this bit is read out by specifying an address in the sector other than specified as sector erase:
    Reads out the value of bit2 of a specified address.
  - During writing:
    Reads out "0".

[bit1:0] Undefined bits

3.3. Explanation of MainFlash Memory Operation

The operation of the MainFlash memory is explained for each command.

3.3.1 Read/Reset Operation

3.3.2 Write Operation

3.3.3 Flash Erase Operation

3.3.4 Sector Erase Operation

3.3.5 Sector Erase Suspended Operation

3.3.6 Sector Erase Restart Operation

3.3.1. Read/Reset Operation

This section explains the read/reset operation.

To place the flash memory in the read/reset state, send read/reset commands to the target sector consecutively.
Because the read/reset state is the default state of the flash memory, the flash memory always returns to this state when the power is turned on or when a command finishes successfully. When the power is turned on, there is no need to issue a data read command. Furthermore, because data can be read by normal read access and programs can be accessed by the CPU while in the read/reset state, there is no need to issue read/reset commands.

3.3.2. Write Operation

This section explains the write operation.

Writes are performed according to the following procedure.

1. The write command is issued to the target sector sequentially
   The automatic algorithm activates and the data is written to the flash memory.
   After the write command is issued, there is no need to control the flash memory externally.

2. Perform read access on the address that was written
   The data that is read is the hardware sequence flags. Therefore, once bit7 (the DPOL bit) of the read data matches the value that was written, the write to the flash memory has finished. If the write has not finished, the reverse value (inverted data) of bit7 written at the last command sequence (PD) is read out.

   Figure 3-2 shows an example of a write operation to the flash memory.

Figure 3-2 Example write operation

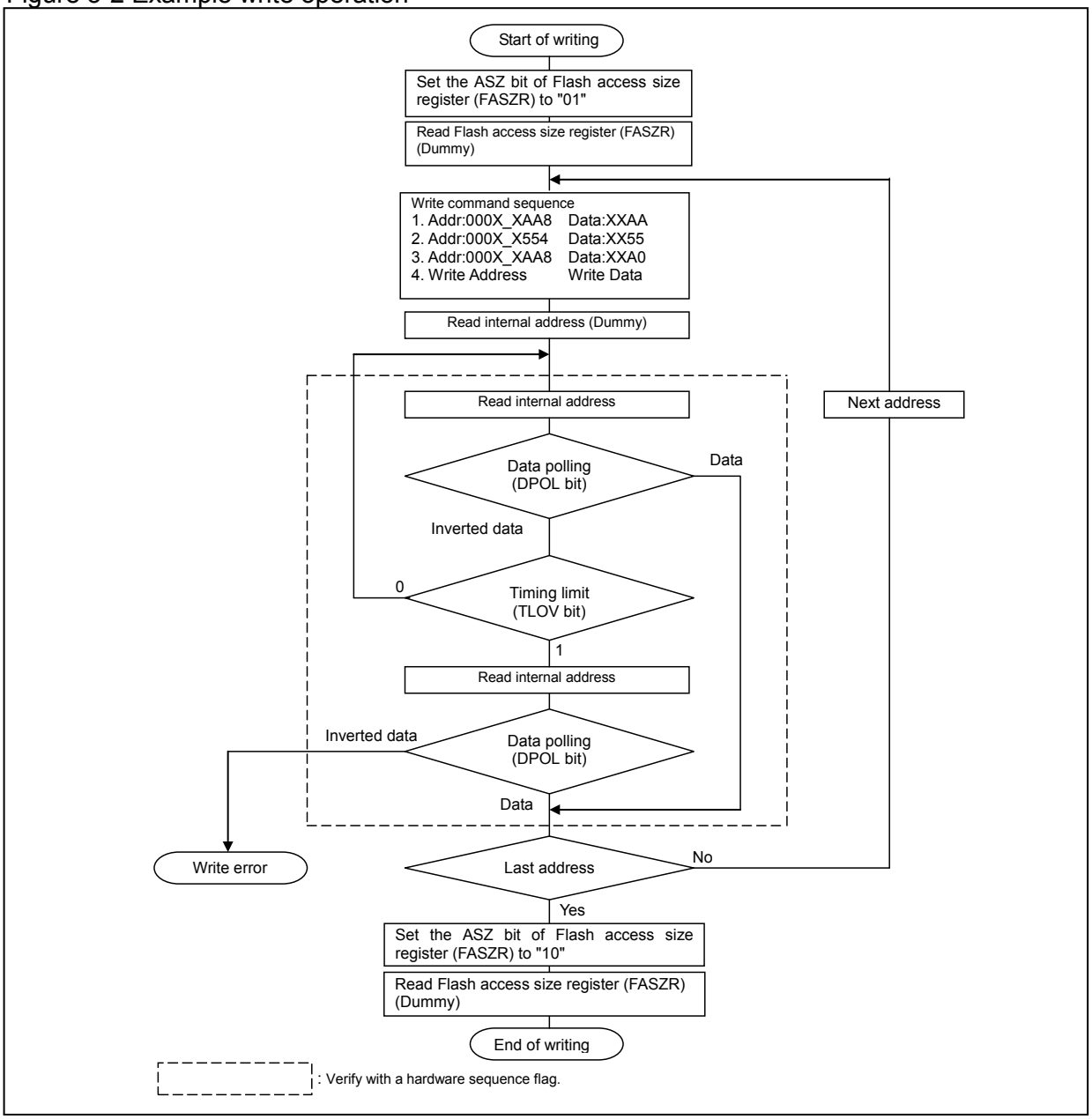

<Notes>

- See Section "3.2 Automatic Algorithm" for details on the write command.
- Because the value of the DPOL bit of the hardware sequence flags changes at the same time as the TLOV bit, the value needs to be checked again even if the TLOV bit is "1".
- The toggle operation stops at the same time as the TOGG bit and TLOV bit of the hardware sequence flags change to "1". Therefore, even if the TLOV bit is "1", the TOGG bit needs to be checked again.
- Although the flash memory can be written in any sequence of addresses regardless of crossing sector boundaries, only a single half-word of data can be written with each write command sequence. To write multiple pieces of data, issue one write command sequence for each piece of data.
- All commands issued to the flash memory during the write operation are ignored.
- If the device is reset while the write is in progress, the data that is written is not guaranteed.
- Because ECC bits are added in this series, writes are always required to be performed in units of 32 bits by using two 16-bit writes. See Section "3.4 Writing to MainFlash Memory in Products Equipped with ECC" for details on the procedure.

3.3.3. Flash Erase Operation

This section explains the flash erase operation.

All sectors in flash memory can be erased in one batch. Erasing all of the sectors in one batch is called flash erase.

The automatic algorithm can be activated and all of the sectors can be erased in one batch by sending the flash erase command sequentially to the target sector.
See Section "3.2 Automatic Algorithm" for details on the flash erase command.

1. Issue the flash erase command sequentially to the target sector
   The automatic algorithm is activated and the flash erase operation of the flash memory begins.

2. Perform read access to an arbitrary address
   The data that is read is the hardware sequence flag. Therefore, if the value of bit7 (the DPOL bit) of the data that was read is "1", that means t the flash erase has finished.

The time required to erase the flash is "sector erase time × total number of sectors + flash write time (preprogramming)".
Once the flash erase operation has finished, the flash memory returns to read/reset mode.

3.3.4. Sector Erase Operation

This section explains the sector erase operation.

Sectors in the flash memory can be selected and the data of only the selected sectors can be erased. Multiple sectors can be specified at the same time.

Sectors are erased according to the following sequence.

1. Issue the sector erase command sequentially to the target sector
   Once 35 μs has elapsed (the timeout interval), the automatic algorithm activates and the sector erase operation begins.
   To erase multiple sectors, issue the erase code (0x30) to an address in the sector to erase within 35 μs (the timeout interval). If the code is issued after the timeout interval has elapsed, the added sector erase code may be invalid.

2. Perform read access to an arbitrary address
   The data that is read is the hardware sequence flags. Therefore, if the value of bit7 (the DPOL bit) of the data that was read is "1", that means the sector erase has finished.
   Furthermore, it can be checked whether or not the sector erase has finished by using the TOGG bit.
   Figure 3-3 shows an example of the sector erase procedure for the case of using the TOGG bit for confirmation.

Figure 3-3 Example sector erase procedure

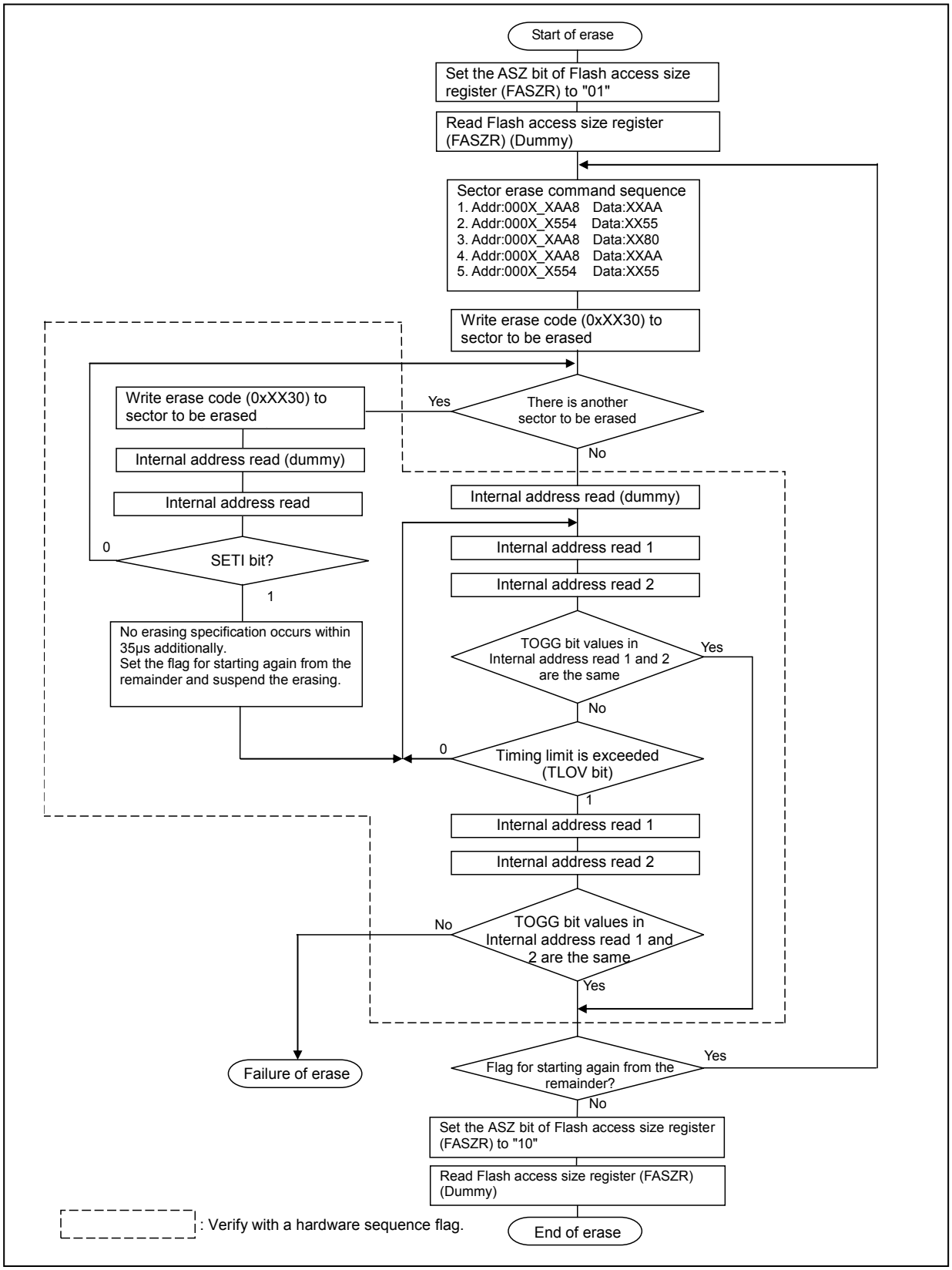

The time required to erase a sector is "(sector erase time + sector write time (preprogramming)) × number of sectors".
Once the sector erase operation has finished, the flash memory returns to read/reset mode.

<Notes>

- See Section "3.2 Automatic Algorithm" for details on the sector erase command.
- Because the value of the DPOL bit of the hardware sequence flags changes at the same time as the TLOV bit, the value needs to be checked again even if the TLOV bit is "1".
- The toggle operation stops at the same time as the TOGG bit and TLOV bit of the hardware sequence flags change to "1". Therefore, even if the TLOV bit is "1", the TOGG bit needs to be checked again.
- If a command other than the sector erase command or the erase suspended command is issued during sector erase, including the timeout interval, it is ignored.

3.3.5. Sector Erase Suspended Operation

This section explains the sector erase suspended operation.

When the sector erase suspended command is sent during sector erase or in the command timeout state, the flash memory makes a transition to the sector erase suspended state and temporarily suspends the erase operation.
By sending the erase restart command, the flash memory is returned to the sector erase state and can restart the suspended erase operation. However, even if the flash memory has changed from the command timeout state to the sector erase suspended state, when the erase restart command is written properly, the flash memory does not make a transition to the command timeout state but make a transition to the sector erase state and restarts the sector erase operation immediately.

■ Sector Erase Suspended Operation

Sector erase is suspended in the following steps:

1. Write the sector erase suspended command to an arbitrary address within the address range of the flash memory during the time between the command timeout interval and the sector erase interval.
2. If the sector erase suspended command is issued during the command timeout interval, stop timeout immediately and suspend the erase operation. If the sector erase suspended command is issued during sector erase, it takes up to 35 μs until erasing is actually stopped.

<Notes>

- See Section "3.2 Automatic Algorithm" for details on the sector erase suspended command.
- Sector erase can only be suspended during the time between the command timeout interval and the sector erase interval. Flash erase cannot be suspended. In addition, even if the sector erase suspended command is issued again during sector erase suspended, it is ignored.

■ State after Sector Erase Suspended

If a sector to erase is read out after sector erase suspended, the hardware sequence flag is read out. On the other hand, if a sector not to erase is read out, data of a memory cell is read out.

<Note>

New erase command is ignored in the sector erase suspended state.

3.3.6. Sector Erase Restart Operation

This section explains the operation for restarting sector erase during sector erase suspended.

When the sector erase restart command is issued to an arbitrary address while sector erase is suspended, sector erase can be restarted.
When the sector erase restart command is issued, the sector erase operation during sector erase suspended is restarted.
See Section "3.2 Automatic Algorithm" for details on the sector erase restart command.

<Notes>

- The sector erase restart command is only valid during sector erase suspended. Even if the sector erase restart command is issued during sector erase, it is ignored.
- After the sector erase restart command is issued, it takes more than 2 ms until the sector erase operation is restarted. Therefore, when erase restart and erase stop are repeated at intervals less than this time, timing limit is exceeded while no erase operation is in progress. If the sector erase suspended command is to be issued again after the sector erase restart command is issued, leave an interval more than 2 ms after the sector erase restart command is issued.

3.4. Writing to MainFlash Memory in Products Equipped with ECC

This section explains the writing to MainFlash memory in products equipped with ECC.

Because ECC (Error Correction Codes) are attached to each word in this series, writes need to be performed in blocks of words. Write the data one word at a time by writing two half-words consecutively using the following procedure. If this procedure is not followed, the data is written to the flash memory without calculating the ECC, and the written data will not be read correctly.

1. Set the flash access size setting to 16 bits. (FASZR:ASZ="01")
   Perform a dummy read, after setting the FASZR register.
2. Issue a write command. Write address = PA, Write data = PD[15:0]
   See Section "3.3.2 Write Operation" for details on the write command.
3. Read the hardware sequence flags once. Because the correct value might not be read out immediately after issuing a command, this read value should be ignored.
4. Read the hardware sequence flags until the write has finished.
   See Section "3.2.3 Automatic Algorithm Run States" for details on reading the hardware sequence flags.
5. Issue a write command. Write address = PA+2, Write data = PD[31:16]
   At this time, the hardware automatically calculates the ECC codes together with PD[15:0] from step 2, and also automatically writes the ECC codes at the same time.
6. Read the hardware sequence flags once. Because the correct value might not be read out immediately after issuing a command, this read value should be ignored.
7. Read the hardware sequence flags until the write has finished.
8. If there is more write data, return to step 2. Once finished writing all of the data, proceed to step 9.
9. Switch to CPU ROM mode. Set the flash access size setting to 32 bits.
   (FASZR:ASZ="10")
   Perform a dummy read, after setting the FASZR register.
10. Read the value that was written, and check that the correct value can be read. Furthermore, even if the correct value was read, check the flash error bits (FSTR:ERR) to ensure that there have been no ECC corrections. If an ECC correction has occurred, erase the flash memory and start again from the beginning.

PA : Write address (word-aligned)
PD[31:0] : Write data
PD[31:16] : Upper 16 bits of the write data
PD[15:0] : Lower 16 bits of the write data

3.5. MainFlash Accelerator

This section explains the MainFlash accelerator.

This series is equipped with Flash accelerator for instruction code to achieve 0 wait at high speed operation (MAX: 160 MHz).

The Flash accelerator has the following functions:

1. Prefetch Buffer
   Addresses will be prefetched to save the instructions in the prefetch buffer. The prefetch buffer consists of 128 bits × 2. If the address hits in this buffer, the value will be output with 0 Wait.
2. Trace Buffer
   16 Kbyte RAM is employed for trace buffer. Values read from the Flash memory will be stored in this buffer at all times. After instruction fetch, if the value has been stored in the trace buffer, it becomes buffer hit and output the value with 0 Wait.

Flash Accelerator operating flow and the number of Wait are shown in Figure 3-4.

- Prefetch buffer access occurs at initial state. If the address do not hit in the prefetch buffer, it becomes prefetch miss. Then, it waits for one cycle and the access is switched to the trace buffer. However, if the value is hit in the trace buffer, it becomes buffer hit and outputs the value stored in the trace buffer with 0 Wait.
- If the address do not hut in the trace buffer and a buffer miss occurs, the access will be switched to one for prefetch buffer again. In that time, the access to the flash memory occurs and the wait cycle of 4 or 5 cycle wait is generated.
- If the address do not hit in both prefetch buffer and trace buffer, 3 or 4 cycle wait for flash memory access is generated.
- When the trace buffer function is disabled by register setting (See Section "4.5 FBFCR (Flash Buffer Control Register)"), switch from prefetch buffer to trace buffer does not occur. At the prefetch miss, it requires 3 or 4 cycle wait cycle for flash memory access.

Figure 3-4 Flash Accelerator operating flow

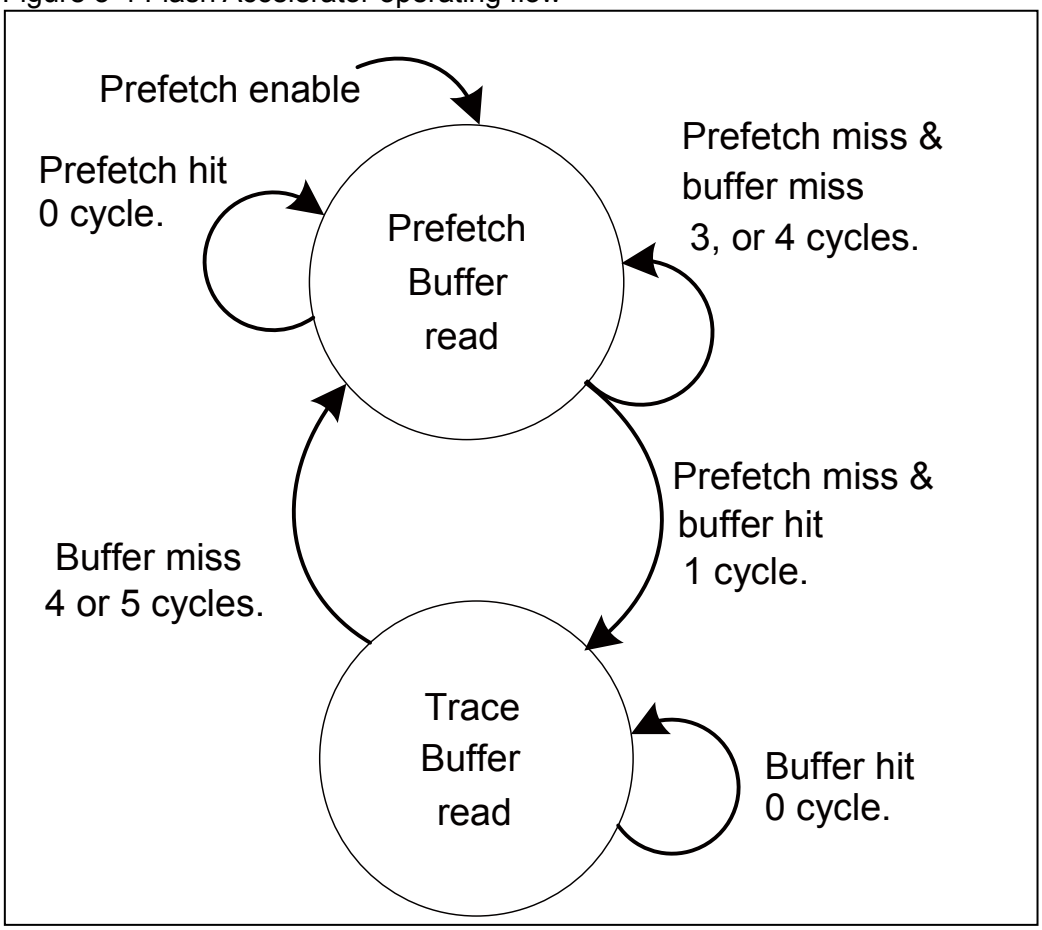

After a reset, RWT bits in FRWTR register becomes "10" to enter flash accelerator mode and operate the prefetch buffer function but the trace buffer function has still been stopped. In order to activate this function, "1" must be written to BE bit in FBFCR (Flash Buffer Control Register). See "4.5 FBFCR (Flash Buffer Control Register))" for details.

3.6. Cautions When Using MainFlash Memory

This section explains the cautions when using MainFlash memory.

- If this device is reset during the write, the data that is written cannot be guaranteed. Moreover, It is necessary to prevent an unexpected reset like Watchdog Timer from occurring during the writing and deleting.
- If the CPU programming mode is configured (ASZ=01) in the ASZ[1:0] bits of the flash access size register (FASZR), do not execute any programs in the flash memory. The correct values will not be retrieved and the program will run out of control.
- If the CPU programming mode is configured (ASZ=01) in the ASZ[1:0] bits of the flash access size register (FASZR) and the interrupt vector table is in the flash memory, ensure that no interrupt requests occur. The correct values will not be retrieved and the program will run out of control.
- If the CPU programming mode is configured (ASZ=01) in the ASZ[1:0] bits of the flash access size register (FASZR), do not transition to low power consumption mode.
- If the CPU ROM mode is configured (ASZ=10) in the ASZ[1:0] bits of the flash access size register (FASZR), do not write to the flash memory.
- If the CPU programming mode is configured (ASZ=01) in the ASZ[1:0] bits of the flash access size register (FASZR), always write to the flash memory in half-words. Do not write in bytes.
- Immediately after issuing the automatic algorithm command to the flash memory, always perform a dummy read before reading the data that is actually wanted. If data is read immediately after issuing the automatic algorithm command, the read value cannot be guaranteed.
- If the device is forced to transit to the low power consumption mode, ensure the operations of the flash memory automatic algorithm is completed.
  See "CHAPTER Low Power Consumption Mode" of the "FM4 Family Peripheral Manual" for details on the low power consumption mode.
- Since ECC bits are added in this series, it is necessary to perform data programming in unites of 32 bits by using 2 times for 16bit writes. See Section "3.4 Writing to MainFlash Memory in Products Equipped with ECC" for details on the procedure.

4. Registers

This section explains the registers.

■ List of Registers

Abbreviated Register Name	Register Name	Reference
FASZR	Flash Access Size Register	4.1
FRWTR	Flash Read Wait Register	4.2
FSTR	Flash Status Register	4.3
FSYNDN	Flash Sync Down Register	4.4
FBFCR	Flash Buffer Control Register	4.5
FICR	Flash Interrupt Register	4.6
FISR	Flash Interrupt Status Register	4.7
FICLR	Flash Interrupt Clear Register	4.8
CRTRMM	CR Trimming Data Mirror Register	4.9
FERRAD	Flash ECC ERR Address Capture Register	4.10

4.1. FASZR (Flash Access Size Register)

This section explains the FASZR.

This register configures the access size for flash memory. After reset is released, ASZ is set to "10" (32-bit read), and the flash memory enters CPU ROM mode. To put the flash memory into CPU programming mode, set ASZ to "01".

bit	7	6	5	4	3	2	1	0
Field	Reserved						ASZ	
Attribute							RW	RW
Initial Value							1	0

[bit7:2] Reserved bits

The read values are undefined. Ignored on write.

[bit1:0] ASZ: Access Size

Specifies the access size of the flash memory.

Field	bit	Description
ASZ	1:0	Flash Access Size 00: Setting prohibited 01: 16-bit read/write (CPU programming mode) 10: 32-bit read (CPU ROM mode: Initial value) 11: Setting prohibited

<Notes>

- When ASZ is set to "01", always perform writes to flash using half-word access (16-bit access).
- Do not change this register using an instruction that is contained in the flash memory. Overwrite this register from a program in any other area except for flash memory.
- Perform a dummy read to register, after changing this register.
- When ASZ="01", BS bit and BE bit in FBFCR register are both cleared to "0", and the trace buffer function is set to OFF.

4.2. FRWTR (Flash Read Wait Register)

This section explains the FRWTR.

This register is effective when ASZ="10" (32-bit read mode).
It configures the access method for flash memory.

bit	7	6	5	4	3	2	1	0
Field	Reserved						RWT	
Attribute							RW	R
Initial Value							1	0

[bit7:2] Reserved bits
The read values are undefined. Ignored on write.

[bit1:0] RWT: Read Wait Cycle
Specifies the access method for flash memory.

Field	bit	Description
RWT	1:0	Read Wait Cycle 00: 0 cycle wait mode (0 latency) This setting can be used when HCLK is 72 MHz or less. 01: Setting prohibited 10: Flash Accelerator mode (Initial value) This setting must be used when HCLK is over 72 MHz. 11: Setting prohibited

In flash accelerator mode (RWT = 10), allowing operating Flash Accelerator prefetch buffer function achieves 0 Wait at high speed operational frequency (up to 160 MHz).
After the Flash Accelerator mode is allowed (after "10" is written to RWT bits), allowing operating Flash Accelerator trace buffer function (See Section "4.5 FBFCR (Flash Buffer Control Register)" achieves additional progress of performance.

When HCLK is 72 MHz or less, 0 cycle wait mode (RWT = 00) is suitable for CPU operation.

<Notes>

- Do not set RWT to "00"(0 cycle wait mode) if HCLK exceeds 72 MHz.
  While RWT setting is 00, HCLK must not exceed 72 MHz.
- Perform a dummy read to register, after changing this register.

4.3. FSTR (Flash Status Register)

This section explains the FSTR.

This is a status register of flash memory.

bit	7	6	5	4	3	2	1	0
Field	Reserved					ERR	HNG	RDY
Attribute						RW	R	R
Initial Value						0	0	X

[bit7:3] Reserved bits

The read values are undefined. Ignored on write.

[bit2] ERR: Flash ECC Error

This bit is set to "1" if ECC error correction occurs.

Field	bit	Description
ERR	2	Flash ECC Error On read: 0: Correction due to an ECC error has not occurred. 1: Correction due to an ECC error has occurred. On write: 0: Clears this bit. 1: Ignored.

[bit1] HNG: Flash Hang

Indicates whether the flash memory is in the HANG state. Flash memory enters the HANG state if the timing is exceeded (See "[bit5] TLOV: Timing Limit Exceeded Flag Bit"). If this bit becomes "1", issue a reset command. (See Section "3.2.1 Command Sequence")

Because the correct value might not be read out immediately after issuing an automatic algorithm command, ignore the value of this bit as read out the first time after a command is issued.

Field	bit	Description
HNG	1	Flash Hang 0: The flash memory HANG state has not been detected. 1: The flash memory HANG state has been detected.

[bit0] RDY: Flash Rdy

Indicates whether a flash memory write or erase operation using the automatic algorithm is in progress or finished. While an operation is in progress, data cannot be written and the flash memory cannot be erased.

Field	bit	Description
RDY	0	Flash Rdy 0: Operation in progress (cannot write or erase) 1: Operation finished (can write or erase)

Because the correct value might not be read immediately after an automatic algorithm command is issued, ignore the value of this bit as read the first time after a command is issued.

4.4. FSYNDN (Flash Sync Down Register)

This section explains the FSYNDN.

The wait cycle is inserted in the read access to the flash memory at the CPU ROM mode. Current consumption can be reduced by decreasing the access clock frequency of the flash memory.

bit	7	6	5	4	3	2	1	0
Field	Reserved					SD		
Attribute						RW	RW	RW
Initial Value						0	0	0

[bit7:3] Reserved bits

The read values are undefined. Ignored on write.

[bit2:0] SD: Sync Down

The wait cycle is inserted in the lead access of the flash memory.

Field	bit	DEscription
SD	2:0	000: 0(Initial value) 001: +1 Wait 010: Setting is prohibited. 011: +3 Wait 100: Setting is prohibited. 101: +5 Wait 110: Setting is prohibited. 111: +7 Wait

The number of wait set by this bit is added to the RWT bits of the flash read wait register (FRWTR).

Example)
RWT=00 (0cycle wait and SD=011, 0+3=3 wait

<Notes>

- This register is valid only when RWT bits in FRWTR register is set to "00". In Flash Accelerator mode (RWT=10), the value of this register is ignored.
- Perform a dummy read to register, after changing this register.

4.5. FBFCR (Flash Buffer Control Register)

This section explains the FBFCR.

In flash accelerator mode (RWT = 10 in FRWTR register), allowing operating FLASH Accelerator trace buffer function by this register will further improve the performance.

bit	7	6	5	4	3	2	1	0
Field	Reserved						BS	BE
Attribute							R	RW
Initial value							0	0

[bit7:2] Reserved bits

The read values are undefined. Ignored on write.

[bit1] BS: Buffer Status

Field	bit	Description
BS	1	Buffer Status 0: Trace buffer function is in stop or in initializing. 1: Trace buffer function operation is allowed.

[bit0] BE: Buffer Enable

Field	bit	Description
BE	0	Buffer Enable 0: Trace buffer function will be stopped. 1: Trace buffer function operation is allowed.

After the trace buffer function operation is allowed (after "1" is written to BE bit), trace buffer initialization will be started. After HCLK × 1025 cycles, the initialization will be completed and the trace buffer enters into operation. BS bit will be set to "1" at this time.

The prefetch buffer will still be functioning while initializing the trace buffer (BE = 1 and BS = 0), allowing access to the flash memory. When changed to BS =1 and the trace buffer is in operation, the trace buffer will automatically start tracing.

4.6. FICR (Flash Interrupt Control Register)

This section explains FICR.

This register is used to enable the interrupt of Flash memory.

bit	7	6	5	4	3	2	1	0
Field	Reserved					ERRIE	HNGIE	RDYIE
Attribute						RW	RW	RW
Initial value						0	0	0

[bit7:3] Reserved bits

The read values are undefined. Ignored on write.

[bit2] ERRIE : Flash ECC Error Interrupt Enable

This bit enables ECC error correction interrupt. When ERRIF bit of FISR register is "1" and this bit is "1", an interrupt to CPU is generated.

Field	bit	Description
ERRIE	2	Flash ECC Error Interrupt Enable 0: ECC error correction interrupt is disabled. (Initial value) 1: ECC error correction interrupt is enabled.

[bit1] HNGIE : Flash HANG Interrupt Enable

This bit enables flash HANG interrupt. When HANGIF bit of FISR register is "1" and this bit is "1", an interrupt to CPU is generated.

Field	bit	Description
HNGIE	1	Flash HANG Interrupt Enable 0: Flash HANG interrupt is disabled. (Initial value) 1: Flash HANG interrupt is enabled.

[bit0] RDYIE : Flash RDY Interrupt Enable

This bit enables Flash RDY interrupt. When RDYIF bit of FISR register is "1" and this bit is "1", an interrupt to CPU is generated.

Field	bit	Description
RDYIE	0	Flash RDY Interrupt Enable 0: Flash RDY interrupt is disabled. (Initial value) 1: Flash RDY interrupt is enabled.

4.7. FISR (Flash Interrupt Status Register)

This section explains FISR.

This register indicates the interrupt state of Flash memory.

bit	7	6	5	4	3	2	1	0
Field	Reserved					ERRIF	HNGIF	RDYIF
Attribute						R	R	R
Initial value						0	0	0

[bit7:3] Reserved bits

The read values are undefined. Ignored on write.

[bit2] ERRIF : Flash ECC Error Interrupt Flag

When the generation of ECC error correction of Flash read data is detected, this bit is set to "1". This bit is set at the rising edge of ERR signal. This bit is cleared by writing "1" to ERRC bit of FICLR register.

Field	bit	Description
ERRIF	2	Flash ECC Error Interrupt Flag 0: The generation of ECC error correction is not detected. 1: The generation of ECC error correction is detected.

[bit1] HNGIF : Flash HANG Interrupt Flag

When the Flash HANG state is detected, this bit is set to "1". This bit is set at the rising edge of HNG signal. This bit is cleared by writing "1" to HNGC bit of FICLR register.

Field	bit	Description
HNGIF	1	Flash HANG Interrupt Flag 0: Flash HANG state is not detected. 1: Flash HANG state is detected.

[bit0] RDYIF : Flash RDY Interrupt Flag

When Flash RDY state is detected, this bit is set to "1". This bit is set at the rising edge of RDY signal. This bit is cleared by writing "1" to RDYC bit of FICLR register.

Field	bit	Description
RDYIF	0	Flash RDY Interrupt Flag 0: Flash RDY state is not detected. 1: Flash RDY state is detected.

4.8. FICLR (Flash Interrupt Clear Register)

This section explains FICLR.

This register is used to clear the interrupt state of Flash memory.

bit	7	6	5	4	3	2	1	0
Field	Reserved					ERRIC	HNGIC	RDYIC
Attribute						RW	RW	RW
Initial value						0	0	0

[bit7:3] Reserved bits

The read values are undefined. Ignored on write.

[bit2] ERRIC : Flash ECC Error Interrupt Clear

This bit clears the ERR interrupt flag. By writing "1" to this bit, ERRIF bit of FISR register is cleared to "0".

Field	bit	Description
ERRIC	2	Flash ECC Error Interrupt Clear At write 0: ECC error correction interrupt flag (ERRIF) is not changed. 1: ECC error correction interrupt flag (ERRIF) is cleared. At read "0" is read out.

[bit1] HNGIC : Flash HANG Interrupt Clear

This bit clears HNG interrupt flag. By writing "1" to this bit, HNGIF bit of FISR register is cleared to "0".

Field	bit	Description
HNGIC	1	Flash HANG Interrupt Clear At write 0: Flash HANG interrupt flag (HNGIF) is not changed. 1: Flash HANG interrupt flag (HNGIF) is cleared. At read "0" is read out.

[bit0] RDYIC : Flash RDY Interrupt Clear

This bit clears RDY interrupt flag. By writing "1" to this bit, RDYIF bit of FISR register is cleared to "0".

Field	bit	Description
RDYIC	0	Flash RDY Interrupt Clear At write 0: Flash RDY interrupt flag (RDYIF) is not changed. 1: Flash RDY interrupt flag (RDYIF) is cleared. At read "0" is read out.

4.9. CRTRMM (CR Trimming Data Mirror Register)

This section explains the CRTRMM.

This is the mirror register of the CR trimming data.
A value of this register can be used in the user mode and the serial writer mode.

bit	31	20	16	9	0
Field	Reserved	TTRMM	Reserved	TRMM	
Attribute		R		R	
Initial value		*		*	

[bit31:21] Reserved bits
The read values are undefined. Ignored on write.

[bit20:16] TTRMM : Temperature CR Trimming Data Mirror Register
After reset is released, store the bit[4:0] in an address of 0x0040_2002 (temperature trimming data) of the flash memory area into this register.
See "CHAPTER High-Speed CR Trimming" of the "FM4 Family Peripheral Manual" for details on the CR temperature trimming data.

Field	bit	Description
TTRMM	20:16	*: Reads out bit[4:0] of an address of 0x0040_2002.

[bit15:10] Reserved bits
The read values are undefined. Ignored on write.

[bit9:0] TRMM : CR Trimming Data Mirror Register
After reset is released, store the bit[9:0] in an address of 0x0040_2000 (frequency trimming data) of the flash memory area into this register.
See "CHAPTER High-Speed CR Trimming" of the "FM4 Family Peripheral Manual" for details on the CR Frequency trimming data.

Field	bit	Description
TRMM	9:0	*: Reads out bit[9:0] of an address of 0x0040_2000.

<Note>
After the flash memory is lost, as this register is cleared when reset is issued in a chip, the stored CR trimming data is lost. Therefore, before this register is cleared, save the CR trimming data stored in the register on the RAM, etc.

4.10. FERRAD (Flash ECC ERR Address Capture Register)

This section explains FERRAD.

This register saves the address when ECC error correction of read data of Flash memory is generated.

bit	31	22	0
Field	Reserved	ERRAD	
Attribute		R	
Initial value		0	

[bit31:23] Reserved bits

The read values are undefined. Ignored on write.

[bit22:0] ERRAD : Flash ECC ERR Address Capture Register

This register saves the address when ECC error correction of read data of Flash memory is generated.

Field	bit	Description
ERRAD	22:0	Saves the address when ECC error correction is generated.

<Note>

An address once stored is retained until ERR bit of FSTR register is set to "1" again. That is to say, without clearing FSTR:ERR bit, the address stored at first is stored irrespective of the continuous generation of ERR.

CHAPTER : WorkFlash Memory

This series is equipped with 512 KBytes to 1024 KBytes of MainFlash memory and 32KBytes of WorkFlash memory.
This chapter gives an overview of, and explains the structure, operation, and registers of the WorkFlash memory.
See "CHAPTER MainFlash Memory" for details of the MainFlash memory. This series has built-in WorkFlash memory with a capacity of 32 KBytes that supports data erasing by all sectors, data erasing by unit of sector, and data writing by the CPU.
Contents described with "flash memory" are information for the WorkFlash memory in this chapter.

1. Overview
2. Configuration
3. Operating Description
4. Registers

1. Overview

This series is equipped with 32 KBytes of built-in WorkFlash memory.
The built-in Workflash memory can be erased data of sector-by-sector, all-sector batch erased data, and programmed data in units of half words (16 bits) by the Cortex-M4F CPU.

■ Flash Memory Features

- Usable capacity:
  32 Kbytes(8K bytes × 4 sectors)

- High-speed flash:
  Up to 40 MHz : 0Wait required for reading
  Up to 72 MHz : 2Wait required for reading
  Up to 120 MHz : 4Wait required for reading
  Up to 160 MHz : 6Wait required for reading

- Operating mode:
  1. CPU ROM mode
     This mode only allows reading of flash memory data. Word access is available. However, in this mode, it is not possible to activate the Automatic algorithm[*1] and to perform writing or erasing.
  2. CPU programming mode
     This mode allows reading, writing, and erasing of flash memory (Automatic algorithm[*1]). Because word access is not available, programs that are contained in the flash memory cannot be executed while operating in this mode. Half-word access is available.
  3. ROM writer mode
     This mode allows reading, writing, and erasing of flash memory from a ROM writer (Automatic algorithm[*1]).

- Built-in flash security function
  (Prevents reading of the content of flash memory by a third party)
  See "CHAPTER Flash Security" for details on the flash security function..

<Note>

This document explains flash memory in the case where it is being used in CPU mode.
For details on accessing the flash memory from a ROM writer, see the instruction manual of the ROM writer that is being used.

*1 : Automatic algorithm=Embedded Algorithm

2. Configuration

This series consists of 32 Kbytes WorkFlash memory area.

Figure 2-1 shows the address and sector structure of the WorkFlash memory.

See "CHAPTER Flash Security" for details on the security.

Figure 2-1 Memory map of WorkFlash memory

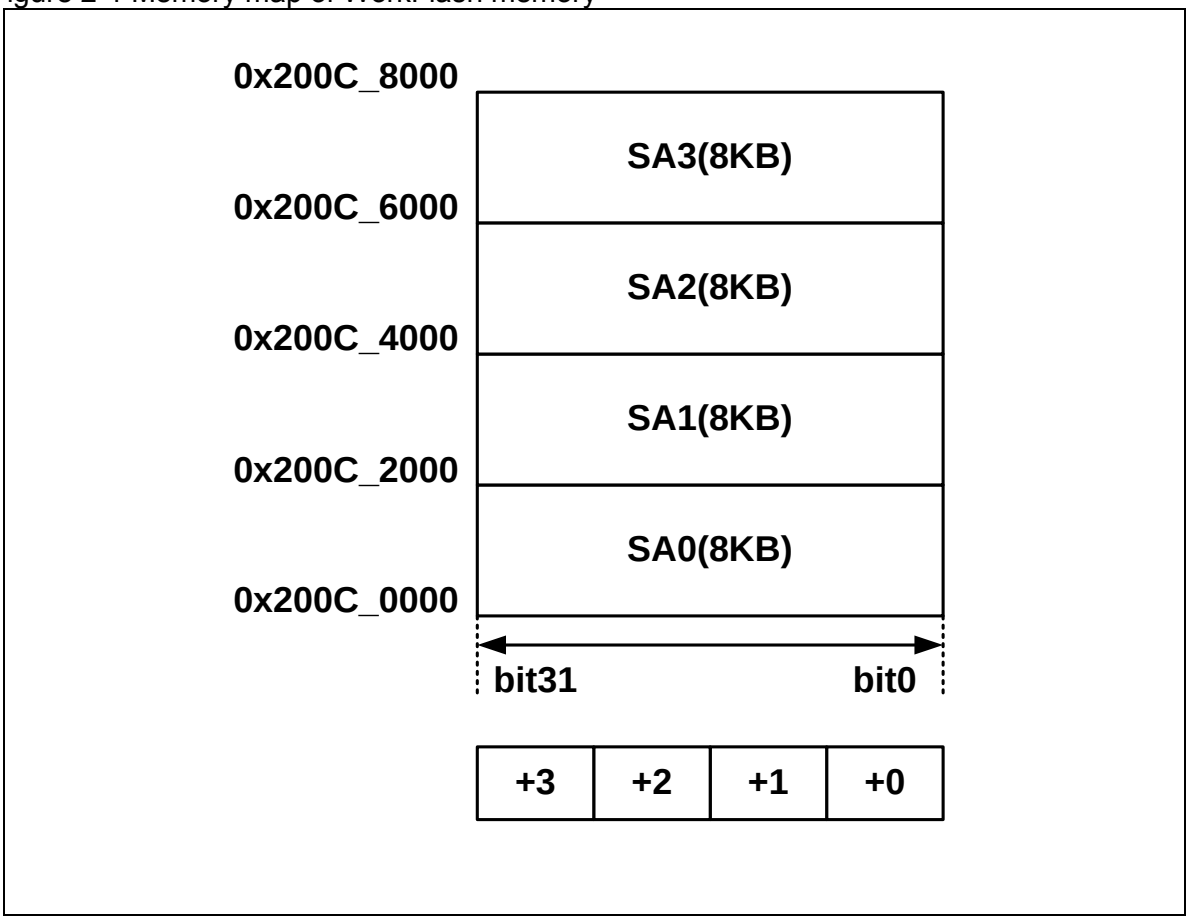

3. Operating Description

This section explains the WorkFlash memory operation.

3.1 WorkFlash Memory Access Modes

3.2 Automatic Algorithm

3.3 Explanation of WorkFlash Memory Operation

3.4 Cautions When Using WorkFlash Memory

3.1. WorkFlash Memory Access Modes

The following two access modes are available for accessing WorkFlash memory from the CPU.

- CPU ROM mode
- CPU programming mode

These modes can be selected by the WorkFlash access size bits (WFASZR:ASZ).

■ CPU ROM Mode

This mode only allows reading of flash memory data.
This mode is entered by setting the WorkFlash access size bits (WFASZR:ASZ) to "1" (32-bit read), and enables word access.

However, in this mode, it is not possible to execute commands, to activate the automatic algorithm or to write or erase data.

The flash memory always enters this mode after reset is released.

■ CPU Programming Mode

This mode allows reading, writing, and erasing of data.
This mode is entered by setting the WorkFlash access size bits (WFASZR:ASZ) to "0" (16-bit read/write), and enables flash programming.

Because word access is not possible in this mode, programs that are contained in the flash memory cannot be executed. The operation while in this mode is as follows.

· During reading
Flash memory is accessed in half-words, with data read out in blocks of 16 bits.

· During writing commands
The automatic algorithm can be activated to write or erase data. See Section "3.2 Automatic Algorithm" for details on the automatic algorithm.

Table 3-1 Access modes of Flash memory

Access Mode	Access Size	Automatic Algorithm	Instruction execution in the Flash Memory
CPU ROM mode	32-bit	Disable	Enable
CPU programming mode	16-bit	Enable	Prohibited

<Note>

The flash memory is always set to CPU ROM mode when a reset is released. Therefore, if a reset occurs after entering CPU programming mode, the WorkFlash access size bits (WFASZR:ASZ) are set to "1" and the flash memory returns to CPU ROM mode.

3.2. Automatic Algorithm

When CPU programming mode is used, writing to and erasing WorkFlash memory is performed by activating the automatic algorithm.
This section explains the automatic algorithm.

3.2.1 Command Sequence

3.2.2 Command Operating Explanations

3.2.3 Automatic Algorithm Run States

3.2.1. Command Sequence

The automatic algorithm is activated by sequentially writing half-word (16-bit) data to the WorkFlash memory one to six times in a row. This is called a command. Table 3-2 shows the command sequences.

Table 3-2 Command sequence table

Command	No. of writes	1st write		2nd write		3RD write		4th write		5th write		6th write	
		Address	Data	Address	Data	Address	Data	Address	Data	Address	Data	Address	Data
Read/ Reset	1	0xXXX	0xF0	--	--	--	--	--	--	--	--	--	--
Write	4	0xAA8	0xAA	0x554	0x55	0xAA8	0xA0	PA	PD	--	--	--	--
Flash erase	6	0xAA8	0xAA	0x554	0x55	0xAA8	0x80	0xAA8	0xAA	0x554	0x55	0xAA8	0x10
Sector erase	6	0xAA8	0xAA	0x554	0x55	0xAA8	0x80	0xAA8	0xAA	0x554	0x55	SA	0x30
Sector erase suspended	1	0xXXX	0xB0	--	--	--	--	--	--	--	--	--	--
Sector erase restarting	1	0xXXX	0x30	--	--	--	--	--	--	--	--	--	--

X: Any value
PA: Write address
SA: Sector address (Specify any address within the address range of the sector to be erased)
PD: Write data

<Notes>

- In Table 3-2, the data notation only shows the lower 8 bits. The upper 8 bits can be set to any value.
- Write commands as half-words at any time.
- In Table 3-2, the address notation only shows the lower 16 bits. The upper 16 bits should be set to any address within the address range of the target flash memory. When the address outside the flash address range is specified, the command sequence would not operate correctly since the flash memory cannot recognize the command.

3.2.2. Command Operating Explanations

This section explains the command operating.

■ Read/Reset Command

The flash memory can be read and reset by sending the read/reset command to the target sector in sequence.

When a read/reset command is issued, the flash memory maintains the read state until another command is issued.

When the execution of the automatic algorithm exceeds the time limit, the flash memory is returned to the read/reset state by issuing the read/reset command.

See Section "3.3.1 Read/Reset Operation" for details of on the actual operation.

■ Program (Write) Command

The automatic algorithm can be activated and the data is written to the flash memory by issuing the write command to the target sector in four consecutive writes. Data writes can be performed in any order of addresses, and may also cross sector boundaries.
In CPU programming mode, data is written in half-words.
Once the forth command issuance has finished, the automatic algorithm is activated and the automatic write to the flash memory starts. After executing the automatic write algorithm command sequence, there is no need to control the flash memory externally.
See Section "3.3.2 Write Operation" for details on the actual operation.

<Notes>

- The command is not recognized properly if the fourth write command (write data cycle) is issued to an odd address. Always issue it to an even address.
- Only a single half-word of data can be written for each write command sequence.
  To write multiple pieces of data, issue one write command sequence for each piece of data.

■ Flash Erase Command

All of the sectors in flash memory can be batch-erased by sending the flash erase command to the target sector in six consecutive writes. Once the sixth sequential write has finished, the automatic algorithm is activated and the flash erase operation starts.

■ Sector Erase Command

A single sector of flash memory can be erased by sending the sector erase command to the target sector in six consecutive writes. Once the sixth sequential write has finished and 35 μs has elapsed (timeout interval), the automatic algorithm is activated and the sector erase operation begins.
To erase multiple sectors, issue the sector erase code (0x30) which is the sixth write code of the sector erase command to the address of the sector to erase within 35 μs (timeout interval). If the sector erase code is not issued within the timeout interval, the sector erase code added after the timeout interval has elapsed may become inactive.

■ Sector Erase Suspended Command

By issuing the sector erase suspended command during sector erase or during command timeout, sector erase can be suspended. In the sector erase suspended state, the read and write operations of memory cells of the sector not to erase are made possible.
See Section "3.3.5 Sector Erase Suspended Operation" for details on the actual operation.

<Note>

This command is only valid during sector erase. It is ignored even if it is issued during flash erase or during write.

■ Sector Erase Restart Command

In order to restart the erase operation in the sector erase suspended state, issue the sector erase restart command. Issuing the sector erase restart command returns the flash memory to the sector erase state and restarts the erase operation.
See Section "3.3.6 Sector Erase Restart Operation" for details on the actual operation.

<Note>

This command is only valid during sector erase suspended. It is ignored even if it is issued during sector erase.

3.2.3. Automatic Algorithm Run States

Because writing and erasing of WorkFlash memory is performed by the automatic algorithm, whether or not the automatic algorithm is currently executing can be checked using the WorkFlash ready bit (WFSTR:RDY) and the operating status can be checked using the hardware sequence flags.

■ Hardware Sequence Flags

These flags indicate the status of the automatic algorithm. When the WorkFlash ready bit (WFSTR:RDY) is "0", the operating status can be checked by reading any address in flash memory.

Figure 3-1 shows the bit structure of the hardware sequence flags.

Figure 3-1 Bit structure of the hardware sequence flags

In the event of half-word access

bit	15	14	13	12	11	10	9	8
	Undefined	Undefined	Undefined	Undefined	Undefined	Undefined	Undefined	Undefined

bit	7	6	5	4	3	2	1	0
	DPOL	TOGG	TLOV	Undefined	SETI	TOGG2	Undefined	Undefined

In the event of byte access

bit	7	6	5	4	3	2	1	0
	DPOL	TOGG	TLOV	Undefined	SETI	TOGG2	Undefined	Undefined

<Notes>

- These flags cannot be read using word access. When in CPU programming mode, always read using half-word or byte access.
- In CPU ROM mode, the hardware sequence flags cannot be read no matter which address is read.
- Because the correct value might not be read out immediately after issuing a command, ignore the first value of the hardware sequence flags that is read after issuing a command.

● Status of each bit and WorkFlash memory

Table 3-3 shows the correspondence between each bit of the hardware sequence flags and the status of the flash memory.

Table 3-3 List of hardware sequence flag states

State				DPOL	TOGG	TLOV	SETI	TOGG2
Running	Automatic write operation			Inverted data (*1)	Toggle	0	0	0
	Automatic Erase Operation	Flash erase		0	Toggle	0	1	Toggle
		Sector erase	Timeout interval	0	Toggle	0	0	Toggle
			Erase	0	Toggle	0	1	Toggle
		Sector erase suspended	Read (Sector to be erased	0	0	0	1	Toggle
			Read (Sector not to be erased)	Data (*1)	Data (*1)	Data (*1)	Data (*1)	Data (*1)
			Automatic write operation (Sector not to be erased)	Inverted data (*1)	Toggle	0	1	0
Time limit exceeded	Write operation			Inverted data (*1)	Toggle	1	0	0
	Automatic erase operation			0	Toggle	1	1	Toggle

*1: See "● Bit Descriptions" for values that can be read.

● Bit Descriptions

[bit15:8] Undefined bits

[bit7] DPOL : Data polling flag bit

When the hardware sequence flags are read, by specifying an arbitrary address, this bit uses a data polling function to indicate whether or not the automatic algorithm is currently running.
The value that is read out varies depending on the operating state.

- During writing
  - While write is in progress:
    Reads out the opposite value (inverse data) of bit7 of data written at the last command sequence (PD).
    This does not access the address that was specified for reading the hardware sequence flags.
  - After write finishes:
    Reads out the value of bit7 of the address specified for reading the hardware sequence flags.
- During sector erase
  - While sector erase is executing:
    Reads out "0" from all areas of flash memory.
  - After sector erase finishes:
    Always reads out "1".
- During flash erase
  - While flash erase is executing: Always reads out "0".
  - After flash erase: Always reads out "1".
- During sector erase suspended
  - When this bit is read out by specifying an address in the sector specified as sector erase:
    Reads out "0".
  - When this bit is read out by specifying an address in the sector other than specified as sector erase
    Reads out the value of bit7 of a specified address.

· During writing:
Reads out the opposite value (inverse data) of bit7 of data written at the last command sequence (PD).
This does not access the address that was specified for reading the hardware sequence flags.

<Note>

The data for a specified address cannot be read while the automatic algorithm is running. Confirm that the automatic algorithm has finished running by using this bit before reading data.

[bit6] TOGG: Toggle Flag Bit

When the hardware sequence flags are read by specifying an arbitrary address, this bit indicates whether or not the automatic algorithm is currently running.
The value that is read out varies depending on the operating state.

· During write, sector erase, or flash erase
· While write, sector erase, or flash erase is in progress:
When this bit is read out continuously, it alternatingly returns "1" and "0" (toggles). The address that was specified for reading the hardware sequence flags is not accessed.

· After write, sector erase, or flash erase has finished:
Reads out the value of bit6 of the address specified for reading the hardware sequence flags.

· During sector erase suspended
· When this bit is read out by specifying an address in the sector specified as sector erase:
Reads out "0".

· When this bit is read out by specifying an address in the sector other than specified as sector erase:
Reads out the value of bit6 of a specified address.

· During writing:
When this bit is read out continuously, it alternatingly returns "1" and "0" (toggles). The address that was specified for reading the hardware sequence flags is not accessed.

[bit5] TLOV: Timing Limit Exceeded Flag Bit

When the hardware sequence flags are read by specifying an arbitrary address, this bit indicates whether or not the execution time of the automatic algorithm has exceeded the rated time defined internally within the flash memory (number of internal pulses).
The value that is read out varies depending on the operating state.

· During write, sector erase, or flash erase
The following values are read out.

0: Within the rated time
1: Rated time exceeded

When this bit is "1", if the DPOL bit and TOGG bit indicate that the automatic algorithm is currently executing, that means a failure occurred during the write or erase.

For example, because data that has been written to "0" cannot be overwritten to "1" in flash memory, if "1" is written to an address that has been written to "0", the flash memory is locked and the automatic algorithm does not finish. In this case, the value of the DPOL bit remains invalid, and "1" and "0" are continuously read out alternatingly from the TOGG bit.
Once the rated time is exceeded while still in this state, this bit changes to "1". If this bit changes to "1", issue the reset command.

· During sector erase suspended
· When this bit is read out by specifying an address in the sector specified as sector erase:
Reads out "0".

· When this bit is read out by specifying an address in the sector other than specified as sector erase:
Reads out the value of bit5 of a specified address.

· During writing:
The following values are read out.

0: Within the rated time
1: Rated time exceeded

When this bit is "1", if the DPOL bit and TOGG bit indicate that the automatic algorithm is currently executing, that means a failure occurred during the write or erase.

<Note>

If this bit is "1", it indicates that the flash memory was not used correctly. This is not a malfunction of the flash memory.
Perform the appropriate processing after issuing the reset command.

[bit4] Undefined bit

[bit3] SETI : Sector Erase Timer Flag Bit

When a sector is erased, a timeout interval of 35 μs is required from when the sector erase command is issued until the sector erase actually begins.
When the hardware sequence flags are read by specifying an arbitrary address, this bit indicates whether or not the flash memory is currently in the sector erase command timeout interval.
The value that is read out varies depending on the operating state.

· During sector erase:
When sectors are being erasing, it can be checked whether or not the following sector erase code can be accepted by checking this bit before inputting the following sector erase code.
The following values are read out without accessing the address specified in order to read the hardware sequence flags.

0: Within sector erase timeout interval
The following sector erase code (0x30) can be accepted.

1: Sector erase timeout interval exceeded
In this case, if the DPOL bit and TOGG bit indicate that the automatic algorithm is currently executing, the erase operation has started internally within the flash memory. In this case, commands other than the sector erase suspended (0xB0) are ignored until the internal flash memory erase operation has finished.

· During sector erase suspended
· When this bit is read out by specifying an address in the sector specified as sector erase:
Reads out "1".

· When this bit is read out by specifying an address in the sector other than specified as sector erase:
Reads out the value of bit3 of a specified address.

· During writing:
Reads out "1".

[bit2] TOGG2: Toggle flag bit

In the sector erase suspended state, a sector which is not the erase target can be read. However, the erase target sector cannot be read. This toggle bit flag can detect whether the corresponding sector is the erase target sector during the sector erase suspend by checking the toggle operation of the read data.

- During writing
  Reads out "0".
- During sector erase or flash erase
  When this bit is read out continuously, "1" and "0" are alternately read (toggle operation).
- During sector erase suspended
- When this bit is read out by specifying an address in the sector specified as sector erase:
  When this bit is read out continuously, "1" and "0" are alternately read (toggle operation)
- When this bit is read out by specifying an address in the sector other than specified as sector erase:
  Reads out the value of bit2 of a specified address.

[bit1:0] Undefined bits

3.3. Explanation of WorkFlash Memory Operation

The operation of the WorkFlash memory is explained for each command.

3.3.1 Read/Reset Operation

3.3.2 Write Operation

3.3.3 Flash Erase Operation

3.3.4 Sector Erase Operation

3.3.5 Sector Erase Suspended Operation

3.3.6 Sector Erase Restart Operation

3.3.1. Read/Reset Operation

This section explains the read/reset operation.

To place the flash memory in the read/reset state, send read/reset commands to the target sector consecutively.
Because the read/reset state is the default state of the flash memory, the flash memory always returns to this state when the power is turned on or when a command finishes successfully. When the power is turned on, there is no need to issue a data read command. Furthermore, because data can be read by normal read access and programs can be accessed by the CPU while in the read/reset state, there is no need to issue read/reset commands.

3.3.2. Write Operation

This section explains the write operation.

Writes are performed according to the following procedure.

1. The write command is issued to the target sector sequentially
   The automatic algorithm activates and the data is written to the flash memory.
   After the write command is issued, there is no need to control the flash memory externally.

2. Perform read access on the address that was written
   The data that is read is the hardware sequence flags. Therefore, once bit7 (the DPOL bit) of the read data matches the value that was written, the write to the flash memory has finished. If the write has not finished, the reverse value (inverted data) of bit7 written at the last command sequence (PD) is read out.

Figure 3-2 shows an example of a write operation to the flash memory.

Figure 3-2 Example write operation

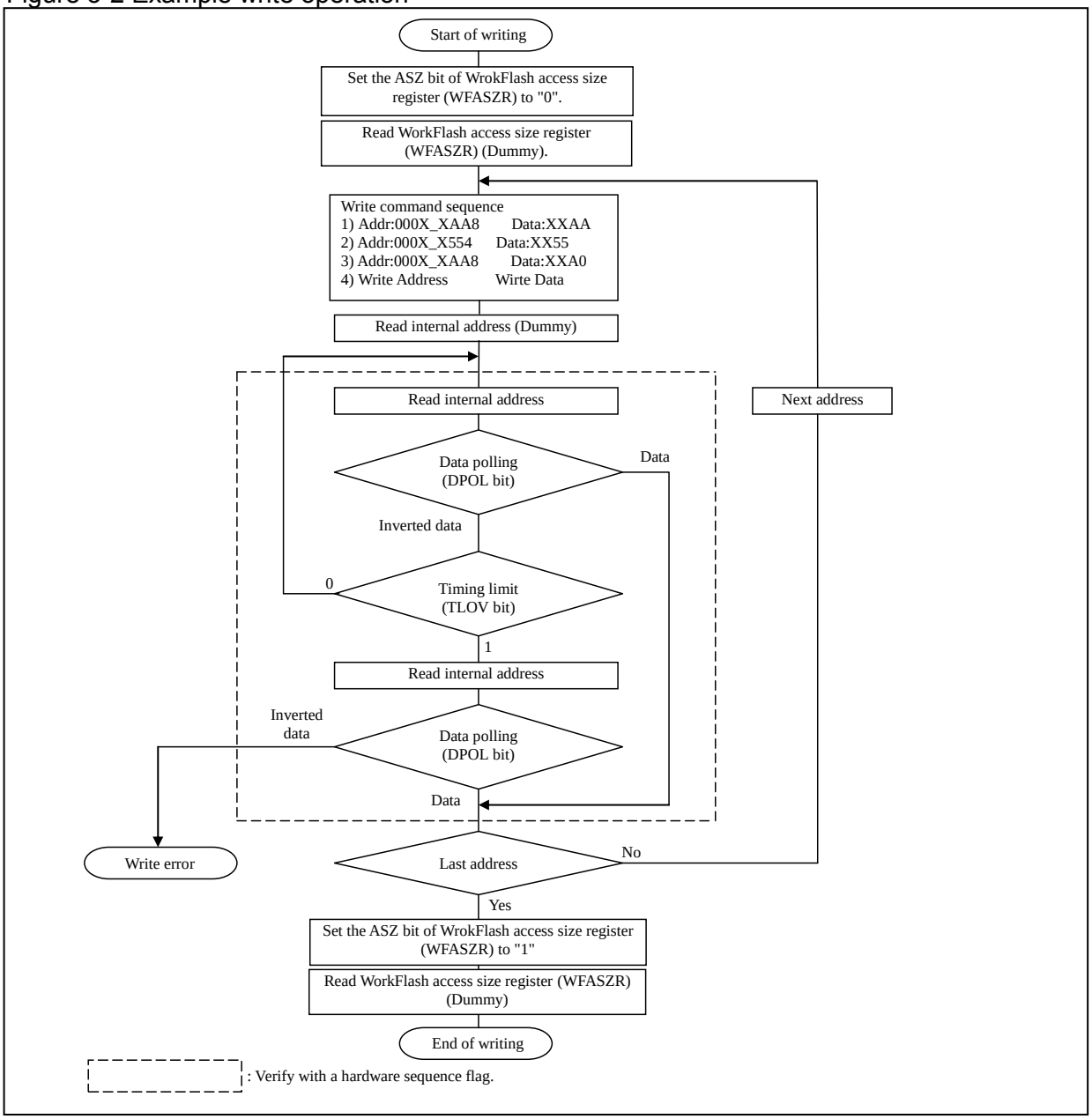

<Notes>

- See Section "3.2 Automatic Algorithm" for details on the write command.
- Because the value of the DPOL bit of the hardware sequence flags changes at the same time as the TLOV bit, the value needs to be checked again even if the TLOV bit is "1".
- The toggle operation stops at the same time as the TOGG bit and TLOV bit of the hardware sequence flags change to "1". Therefore, even if the TLOV bit is "1", the TOGG bit needs to be checked again.
- Although the flash memory can be written in any sequence of addresses regardless of crossing sector boundaries, only a single half-word of data can be written with each write command sequence. To write multiple pieces of data, issue one write command sequence for each piece of data.
- All commands issued to the flash memory during the write operation are ignored.
- If the device is reset while the write is in progress, the data that is written is not guaranteed.

3.3.3. Flash Erase Operation

This section explains the flash erase operation.

All sectors in flash memory can be erased in one batch. Erasing all of the sectors in one batch is called flash erase.

The automatic algorithm can be activated and all of the sectors can be erased in one batch by sending the flash erase command sequentially to the target sector.
See Section "3.2 Automatic Algorithm" for details on the flash erase command.

1. Issue the flash erase command sequentially to the target sector
   The automatic algorithm is activated and the flash erase operation of the flash memory begins.

2. Perform read access to an arbitrary address
   The data that is read is the hardware sequence flag. Therefore, if the value of bit7 (the DPOL bit) of the data that was read is "1", that means t the flash erase has finished.

The time required to erase the flash is "sector erase time x total number of sectors + flash write time (preprogramming)".
Once the flash erase operation has finished, the flash memory returns to read/reset mode.

3.3.4. Sector Erase Operation

This section explains the sector erase operation.

Sectors in the flash memory can be selected and the data of only the selected sectors can be erased. Multiple sectors can be specified at the same time.

Sectors are erased according to the following sequence.

1. Issue the sector erase command sequentially to the target sector
   Once 35 μs has elapsed (the timeout interval), the automatic algorithm activates and the sector erase operation begins.
   To erase multiple sectors, issue the erase code (0x30) to an address in the sector to erase within 35 μs (the timeout interval). If the code is issued after the timeout interval has elapsed, the added sector erase code may be invalid.

2. Perform read access to an arbitrary address
   The data that is read is the hardware sequence flags. Therefore, if the value of bit7 (the DPOL bit) of the data that was read is "1", that means the sector erase has finished.
   Furthermore, it can be checked whether or not the sector erase has finished by using the TOGG bit.
   Figure 3-3 shows an example of the sector erase procedure for the case of using the TOGG bit for confirmation.

Figure 3-3 Example sector erase procedure

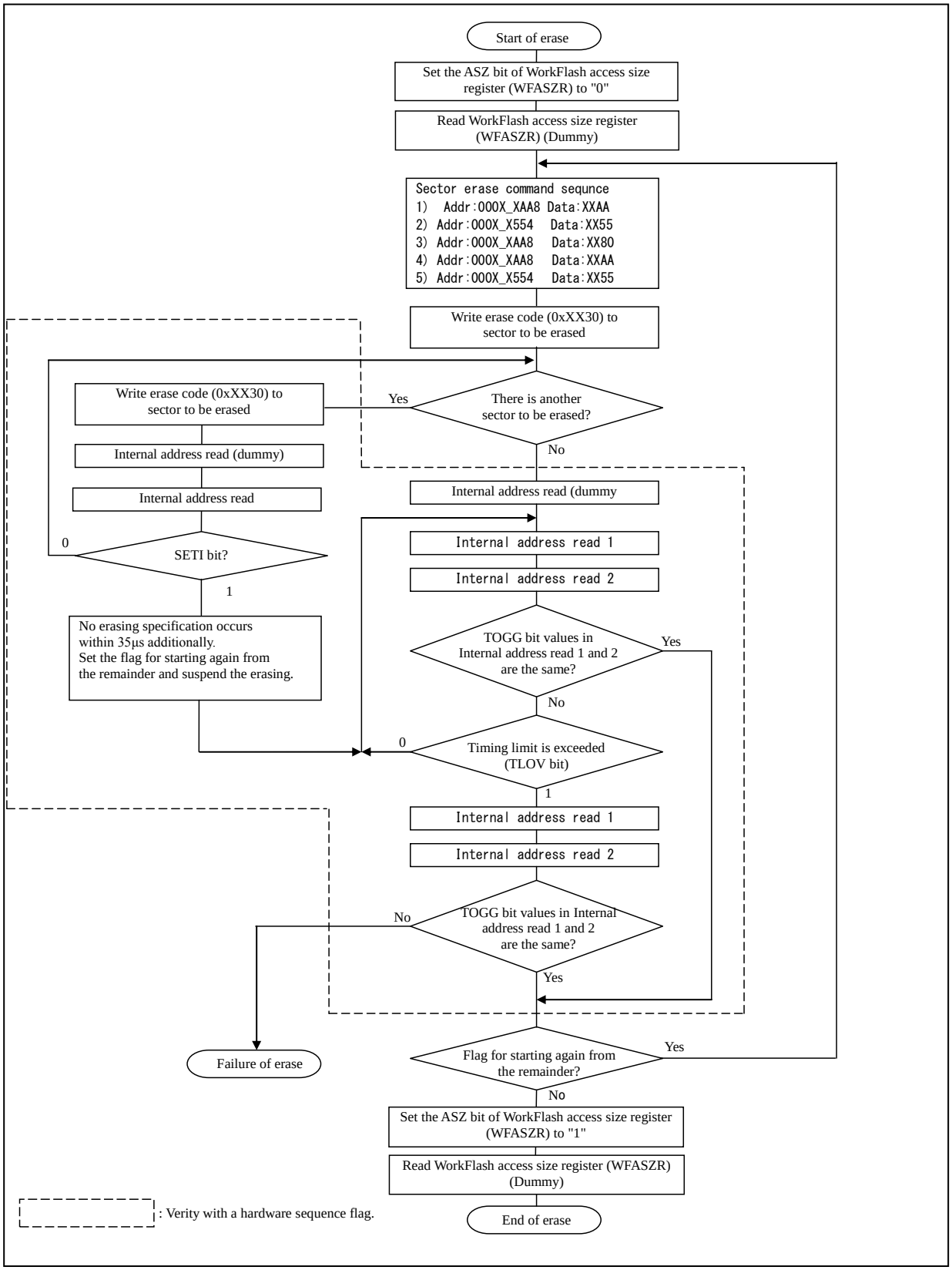

The time required to erase a sector is "(sector erase time + sector write time (preprogramming)) × number of sectors".
Once the sector erase operation has finished, the flash memory returns to read/reset mode.

<Notes>

- See Section "3.2 Automatic Algorithm" for details on the write command.
- Because the value of the DPOL bit of the hardware sequence flags changes at the same time as the TLOV bit, the value needs to be checked again even if the TLOV bit is "1".
- The toggle operation stops at the same time as the TOGG bit and TLOV bit of the hardware sequence flags change to "1". Therefore, even if the TLOV bit is "1", the TOGG bit needs to be checked again.
- If a command other than the sector erase command or the erase suspended command is issued during sector erase, including the timeout interval, it is ignored.

3.3.5. Sector Erase Suspended Operation

This section explains the sector erase suspended operation.

When the sector erase suspended command is sent during sector erase or in the command timeout state, the flash memory makes a transition to the sector erase suspended state and temporarily suspends the erase operation.
By sending the erase restart command, the flash memory is returned to the sector erase state and can restart the suspended erase operation. However, even if the flash memory has changed from the command timeout state to the sector erase suspended state, when the erase restart command is written properly, the flash memory does not make a transition to the command timeout state but make a transition to the sector erase state and restarts the sector erase operation immediately.

■ Sector Erase Suspended Operation

Sector erase is suspended in the following steps:

1. Write the sector erase suspended command to an arbitrary address within the address range of the flash memory during the time between the command timeout interval and the sector erase interval.
2. If the sector erase suspended command is issued during the command timeout interval, stop timeout immediately and suspend the erase operation. If the sector erase suspended command is issued during sector erase, it takes up to 35 μs until erasing is actually stopped.

<Notes>

- See Section "3.2 Automatic Algorithm" for details on the sector erase suspended command.
- Sector erase can only be suspended during the time between the command timeout interval and the sector erase interval. Flash erase cannot be suspended. In addition, even if the sector erase suspended command is issued again during sector erase suspended, it is ignored.

■ State after Sector Erase Suspended

If a sector to erase is read out after sector erase suspended, the hardware sequence flag is read out. On the other hand, if a sector not to erase is read out, data of a memory cell is read out.

<Note>

New write and erase commands are ignored in the sector erase suspended state.

3.3.6. Sector Erase Restart Operation

This section explains the operation for restarting sector erase during sector erase suspended.

When the sector erase restart command is issued to an arbitrary address while sector erase is suspended, sector erase can be restarted.
When the sector erase restart command is issued, the sector erase operation during sector erase suspended is restarted.
See Section "3.2 Automatic Algorithm" for details on the sector erase restart command.

<Notes>

- The sector erase restart command is only valid during sector erase suspended. Even if the sector erase restart command is issued during sector erase, it is ignored.
- After the sector erase restart command is issued, it takes more than 2 ms until the sector erase operation is restarted. Therefore, when erase restart and erase stop are repeated at intervals less than this time, timing limit is exceeded while no erase operation is in progress. If the sector erase suspended command is to be issued again after the sector erase restart command is issued, leave an interval more than 2 ms after the sector erase restart command is issued.

3.4. Cautions When Using WorkFlash Memory

This section explains the cautions when using WorkFlash memory.

- If this device is reset during the write, the data that is written cannot be guaranteed. Moreover, It is necessary to prevent an unexpected reset like Watchdog Timer from occurring during the writing and deleting.
- If the CPU programming mode is configured (ASZ=0) in the ASZ bits of the WorkFlash access size register (WFASZR), do not execute any programs in the flash memory. The correct values will not be retrieved and the program will run out of control.
- If the CPU programming mode is configured (ASZ=0) in the ASZ bits of the WorkFlash access size register (WFASZR) and the interrupt vector table is in the flash memory, ensure that no interrupt requests occur. The correct values will not be retrieved and the program will run out of control.
- If the CPU programming mode is configured (ASZ=0) in the ASZ bits of the WorkFlash access size register (WFASZR), do not transition to low power consumption mode.
- If the CPU ROM mode is configured (ASZ=1) in the ASZ bits of the WorkFlash access size register (WFASZR), do not write to the flash memory.
- If the CPU programming mode is configured (ASZ=0) in the ASZ bits of the WorkFlash access size register (WFASZR), always write to the flash memory in half-words. Do not write in bytes.
- Immediately after issuing the automatic algorithm command to the flash memory, always perform a dummy read before reading the data that is actually wanted. If data is read immediately after issuing the automatic algorithm command, the read value cannot be guaranteed.
- If the device is forced to transit to the low power consumption mode, ensure the operations of the flash memory automatic algorithm is completed.
  See "CHAPTER Low Power Consumption Mode" of the "FM4 Family Peripheral Manual" for details on the low power consumption mode.

4. Registers

This section explains the registers.

■ List of Registers

Abbreviated Register Name	Register Name	Reference
WFASZR	WorkFlash Access Size Register	4.1
WFRWTR	WorkFlash Read Wait Register	4.2
WFSTR	WorkFlash Status Register	4.3

4.1. WFASZR (WorkFlash Access Size Register)

This section explains the WFASZR.

This register configures the access size for flash memory. After reset is released, ASZ is set to "1" (32-bit read), and the flash memory enters CPU-ROM mode. To put the flash memory into CPU programming mode, set ASZ to "0".

bit	7	6	5	4	3	2	1	0
Field	Reserved							ASZ
Attribute								RW
Initial value								1

[bit7:1] Reserved bits

The read values are undefined. Ignored on write.

[bit0] ASZ: Access Size

Specifies the access size of the flash memory.

Field	bit	Description
ASZ	0	WorkFlash Access Size 0: 16-bit read/write (CPU programming mode) 1: 32-bit read (CPU ROM mode: Initial value)

<Note>

- When ASZ is set to "01", always perform writes to flash using half-word access (16-bit access).
- Do not change this register using an instruction that is contained in the flash memory. Overwrite this register from a program in any other area except for flash memory.
- Perform a dummy read to register, after changing this register.

4.2. WFRWTR (WorkFlash Read Wait Register)

This section explains the WFRWTR.

This register is effective when ASZ="1" (32-bit read mode).
It configures the access method for flash memory.

bit	7	6	5	4	3	2	1	0
Field	Reserved					RWT		
Attribute						RW	RW	RW
Initial value						1	X	X

[bit7:3] Reserved bits
The read values are undefined. Ignored on write.

[bit2:0] RWT: Read Wait Cycle
Specifies the access method for flash memory.

Field	bit	Description
RWT	2:0	Read Wait Cycle 000: 0 cycle wait mode (0 latency) This setting can be used when HCLK is 40 MHz or less. 001: 2 cycles wait mode This setting can be used when HCLK is more than 40 MHz and 72MHz or less. 01x: 4 cycles wait mode This setting can be used when HCLK is more than 72 MHz and 120 MHz or less. 1xx: 6 cycles wait mode (Initial Value) This setting must be used when HCLK is over 120 MHz.

<Notes>

- Do not set RWT to "000" (0 cycle wait mode) if HCLK exceeds 40 MHz.
  During RWT=000, HCLL must not exceed 40 MHz at a moment.
- Do not set RWT to "000" (0 cycle wait mode) or "001" (2 cycles wait mode) if HCLK exceeds 72 MHz.
  During RWT=000 or RWT=001, HCLL must not exceed 72MHz at a moment.
- Do not set RWT to "000" (0 cycle wait mode), "001" (2 cycles wait mode), or "01x" (4 cycle wait mode) if HCLK exceeds 120. During RWT=000, RWT=001, or RWT=01x, HCLK must not exceed 120MHz at a moment.
- Perform a dummy read to register, after changing this register.

4.3. WFSTR (WorkFlash Status Register)

This section explains the WFSTR.

This is a status register of flash memory.

bit	7	6	5	4	3	2	1	0
Field	Reserved						HNG	RDY
Attribute							R	R
Initial value							0	X

[bit7:2] Reserved bits

The read values are undefined. Ignored on write.

[bit1] HNG : WorkFlash Hang

Indicates whether the flash memory is in the HANG state. Flash memory enters the HANG state if the timing is exceeded (See "[bit5] TLOV: Timing Limit Exceeded Flag Bit"). If this bit becomes "1", issue a reset command (See Section "3.2.1 Command Sequence".)

Because the correct value might not be read out immediately after issuing an automatic algorithm command, ignore the value of this bit as read out the first time after a command is issued.

Field	bit	Description
HNG	1	WorkFlash Hang 0: The flash memory HANG state has not been detected. 1: The flash memory HANG state has been detected.

[bit0] RDY : WorkFlash Rdy

Indicates whether a flash memory write or erase operation using the automatic algorithm is in progress or finished. While an operation is in progress, data cannot be written and the flash memory cannot be erased.

Field	bit	Description
RDY	0	WorkFlash Rdy 0: Operation in progress (cannot write or erase) 1: Operation finished (can write or erase)

Because the correct value might not be read immediately after an automatic algorithm command is issued, ignore the value of this bit as read the first time after a command is issued.

CHAPTER: Flash Security

The flash security function protects contents of the MainFlash memory and the WorkFlash memory.

This section describes the overview and operations of the flash security.

1. Overvoiew
2. Operation Explanation

1. Overview

This section explains the overview of the flash security.

If the protection code of 0x0001 is written in the security code area of MainFlash memory, access to the MainFlash memory and the WorkFlash memory is restricted. Once theses flash memories are protected, performing the flash erase operation only can unlock the function otherwise read/write access to the MainFlash memory and the WorkFlash memory from any external pins is not possible.

This function is suitable for applications requiring security of self-containing program and data stored in the flash memory.

Table 1-1 shows the address and the protection code of the security code.

Table 1-1 Address of security code and protection code

Address	Protection Code
0x0040_0000	0x0001

<Note>

When the protection code is written in the security code area of the MainFlash memory, the flash security will be valid for both of the MainFlash memory and the WorkFlash memory at the same time.

2. Operation Explanation

This section explains the operation of the flash security.

■ Setting Security

Write the protection code 0x0001 in address of the security code. The security is enabled and set after all the reset factors are generated or after turning on the power again.

■ Releasing Security

1. Issue the flash erase command to the WorkFlash memory
2. Confirm if the flash erase operation for the WorkFlash memory is completed.
3. Issue the flash erase command to the MainFlash memory where the security code is stored.
4. The security is released by all the reset factors or power-on after the execution of flash erase.

■ Operation with Security Enabled

The operations with security enabled vary depending on each mode.

Table 2-1 shows the security operations in each mode.

Table 2-1 Flash Operation with Security Enabled

Mode	Mode pin MD[1:0]	Access to flash			Access from JTAG pins
		Flash erase	Other commands	Read	
User mode	"00"	Enabled	Enabled	Valid data	Disabled
Serial writer mode	"01"	Enabled	Disabled	Invalid data	Disabled

<Notes>

- Writing the protection code is generally recommended to take place at the end of the flash programming. This is to avoid unnecessary protection during the programming.
- In user mode, there is no limit to flash memory even during security is enabled. However, JTAG pins are fixed not to access internally from these pins during security is enabled. To release security, perform the flash erase operation using a serial writer because the security cannot be released through JTAG pins.
- When security enabled, the obstruction analysis of the flash memory cannot be performed.
- When the security is released, erase the data of WorkFlash memory at first. The data of MainFlash memory cannot be erased before erasing the data of WorkFlash memory.

CHAPTER : Serial Programming Connection

This series supports serial onboard write (Fujitsu Semiconductor standard) to flash memory. This chapter explains the basic configuration for serial write to flash memory by using the Fujitsu Semiconductor Serial Programmer.

1. Serial Programmer

Code : 9BF560FSP-E01.1

1. Serial Programmer

Fujitsu Semiconductor Serial Programmer (software) is an onboard programming tool for all microcontrollers with built-in flash memory.

Two types of Serial Programmer are available according to the PC interface (RS-232C or USB) used. Choose the type according to your environment.

Onboard write is possible with the product which USB function is installed by connecting the PC and microcontroller directly without performing USB-serial conversion.

1.1 Basic Configuration

1.2 Pins Used

1.1. Basic Configuration

This section explains the basic configuration.

■ Basic Configuration of FUJITSU SEMICONDUCTOR MCU Programmer (Clock Asynchronous Serial Write)

FUJITSU SEMICONDUCTOR MCU Programmer writes data, through clock asynchronous serial communication, to built-in flash memory of a microcontroller installed in the user system when the PC and the user system are connected through RS-232C cable.

In these series, serial programming (UART communication mode) is possible by any clock, crystal oscillator or external clock or built-in High-speed CR oscillator.

Figure 1-1 shows the basic configuration of FUJITSU SEMICONDUCTOR MCU Programmer, and Table 1-1 lists the system configuration.

Figure 1-1 Basic Configuration of FUJITSU SEMICONDUCTOR MCU Programmer

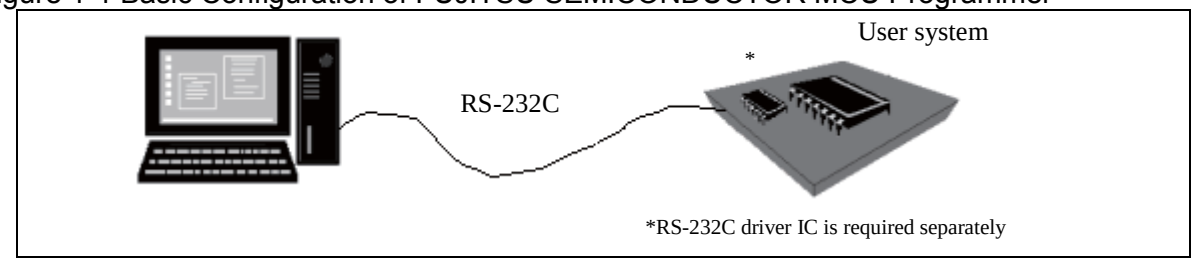

Table 1-1 System Configuration of FUJITSU SEMICONDUCTOR MCU Programmer

Name	Specifications
FUJITSU SEMICONDUCTOR MCU Programmer	Software (In case you request the data, contact to FUJITSU sales representatives.)
RS-232C cable	Sold on the market.

■ Connection Example of FUJITSU SEMICONDUCTOR MCU Programmer

The following shows a connection example of FUJITSU SEMICONDUCTOR MCU Programmer.

● When Crystal oscillator is used as the source oscillation clock

Figure 1-2 shows a connection example of FUJITSU SEMICONDUCTOR MCU Programmer when a crystal oscillator is used as a source oscillation clock and Table 1-2 available frequencies and communication baud rates.

Figure 1-2 Connection Example when Crystal Oscillator is Used

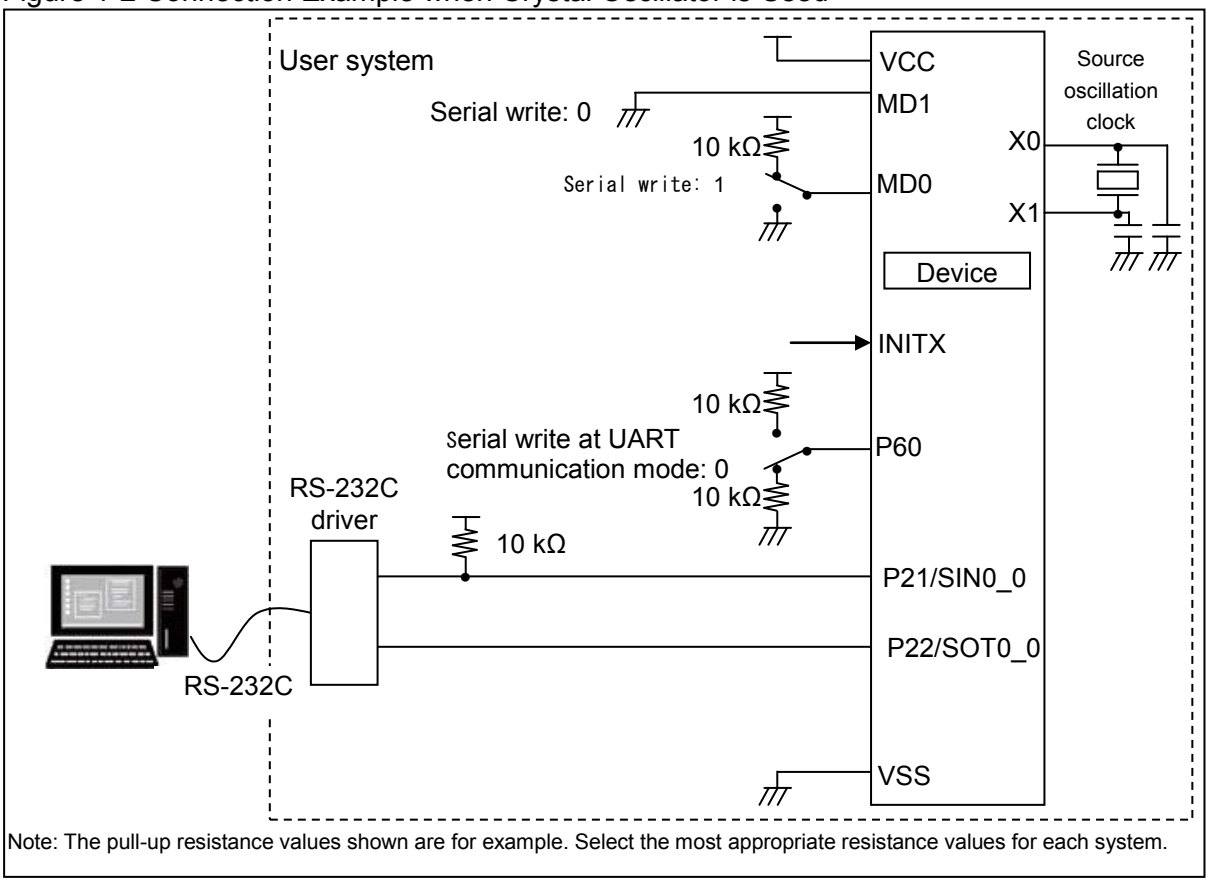

Note: The pull-up resistance values shown are for example. Select the most appropriate resistance values for each system.

Table 1-2 Oscillating frequency and communication baud rate available for clock asynchronous serial communication

Source Oscillating Frequency	Communication Baud Rate
4MHz	9600bps
8MHz	19200bps
16MHz	38400bps
24MHz	57600bps
48MHz	115200bps

● When built-in high-speed CR oscillator is used as a source oscillation clock

Figure 1-3 shows a connection example of FUJITSU SEMICONDUCTOR MCU Programmer when a built-in high-speed CR oscillator is used as a source oscillation clock.

When neither crystal oscillator nor external clock is connected to X0/X1 pins, the built-in high-speed CR oscillator is connected for communication.

The communication baud rate is 9600[bps] when built-in high-speed CR oscillator is used

The following are the restrictions when built-in high-speed CR oscillator is used

- Because the oscillation frequency of the built-in high-speed CR oscillator would fluctuate due to temperature and voltage change, the allowable baud rate error range might be exceeded.
- For using the built-in high-speed CR oscillator, see "Built-in CR Oscillation Specifications" in "Data Sheet" of the product used.

Figure 1-3 Connection Example When Built-in High-speed CR Oscillator is used

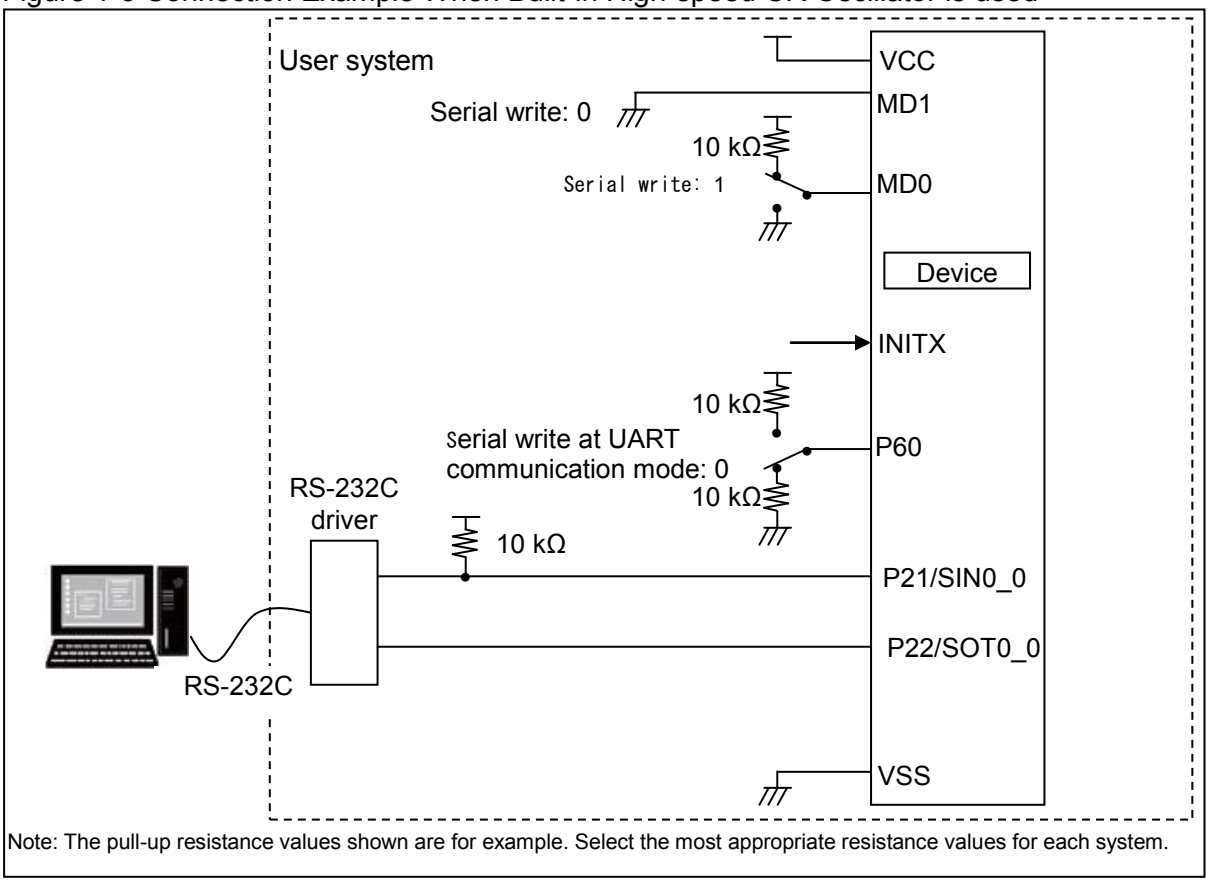

Note: The pull-up resistance values shown are for example. Select the most appropriate resistance values for each system.

■ Basic Configuration of FUJITSU USB DIRECT Programmer (USB Serial Write)

FUJITSU USB DIRECT Programmer writes data, through USB communication mode, to built-in flash memory of a microcontroller when the PC and the user system are connected through a USB cable.

Figure 1-4 shows the basic configuration of FUJITSU USB DIRECT Programmer, and Table 1-3 lists the system configuration.

Figure 1-4 Basic Configuration of FUJITSU USB DIRECT Programmer



Table 1-3 System Configuration of FUJITSU USB DIRECT Programmer

Name	Specifications
FUJITSU USB DIRECT Programmer	Software (In case you request the data, contact to FUJITSU sales representatives.)
USB cable	Sold on the market.

For connection examples, see the manual (help section) of FUJITSU USB DIRECT Programmer.

Figure 1-5 Connection example using FUJITSU USB DIRECT Programmer (own power supply is used.))

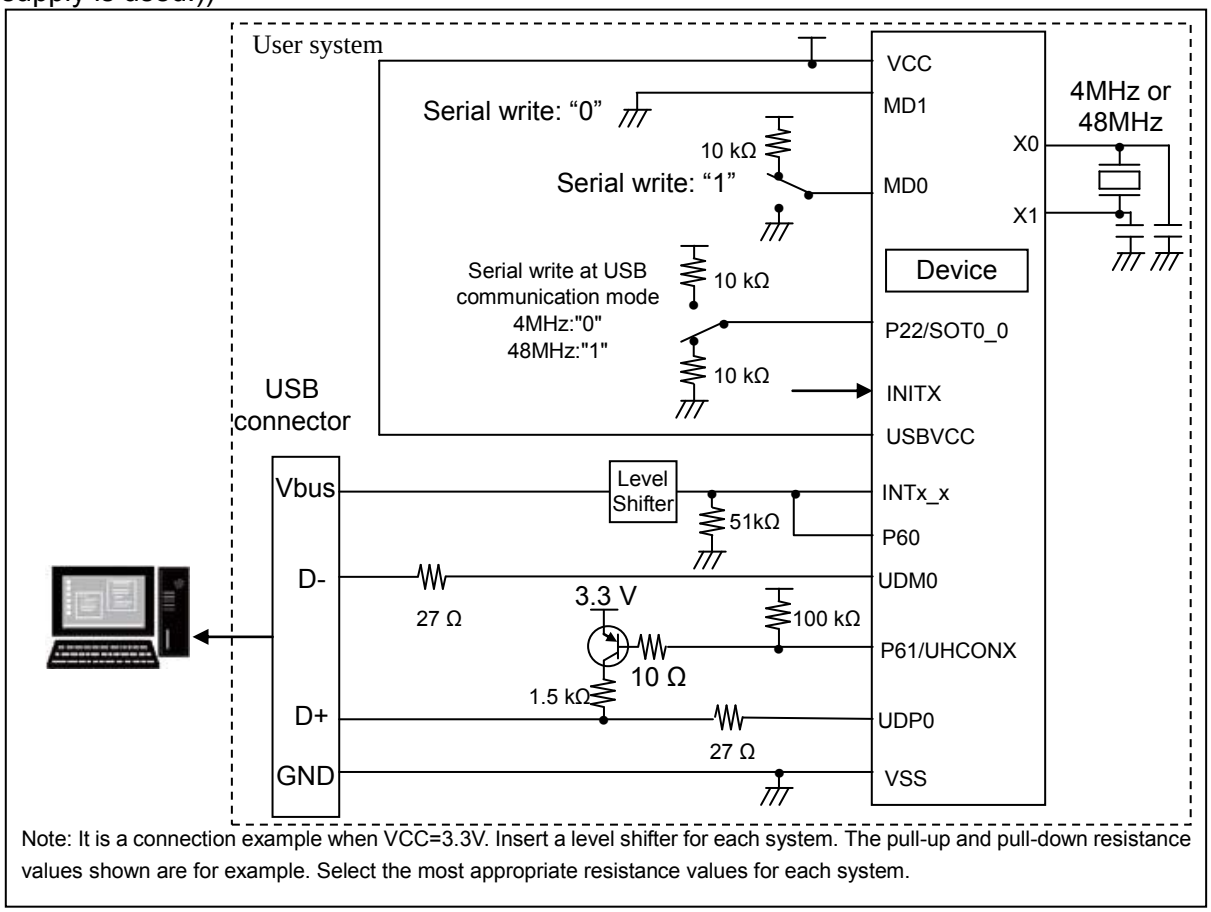

Note: It is a connection example when VCC=3.3V. Insert a level shifter for each system. The pull-up and pull-down resistance values shown are for example. Select the most appropriate resistance values for each system.

Figure 1-6 Connection example using FUJITSU USB DIRECT Programmer bus power supply is used.)

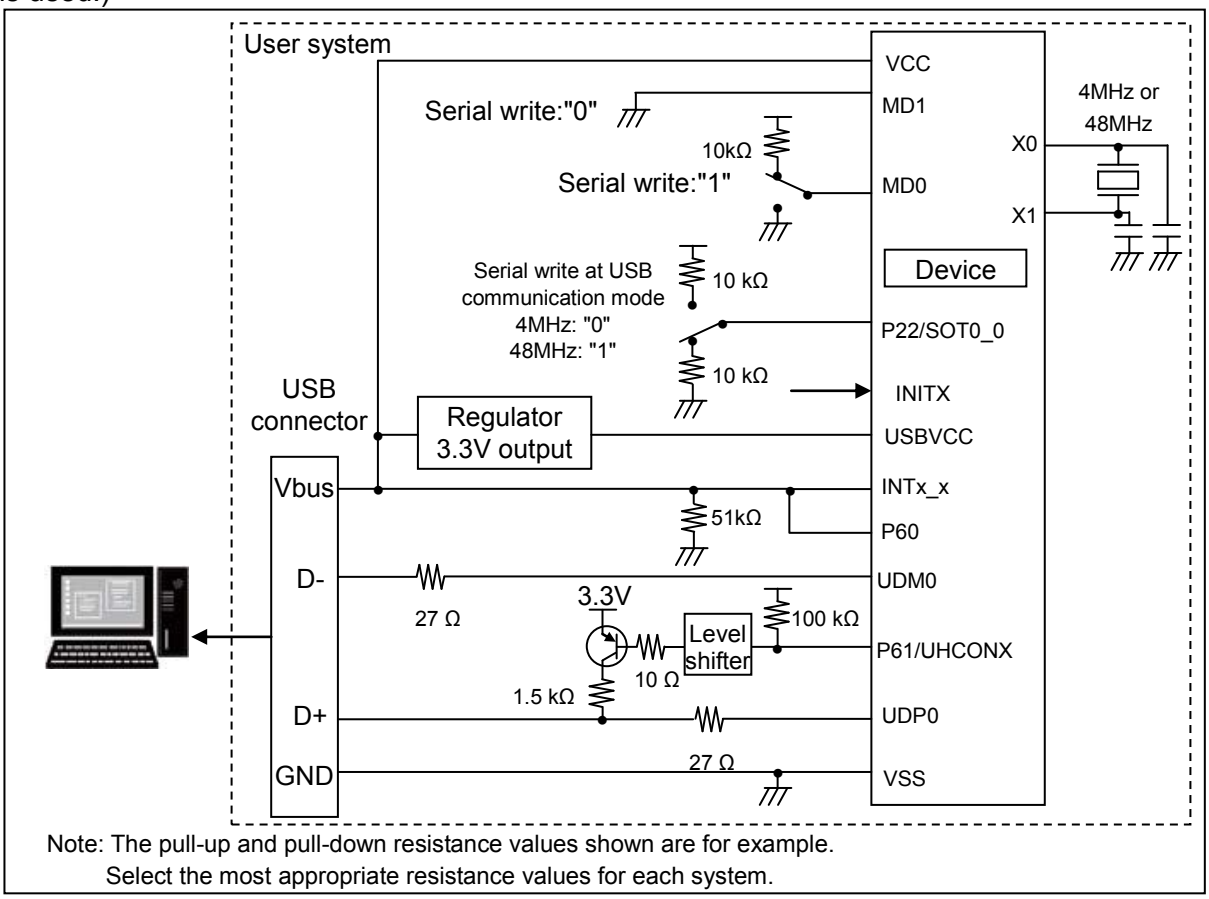

Note: The pull-up and pull-down resistance values shown are for example.
Select the most appropriate resistance values for each system.

1.2. Pins Used

This section explains the used pins.

Table 1-4 Pins used for serial write

Pins	Function	Supplement
MD0, MD1	Mode pin	Performing an external reset or turning on the power after setting MD0=H and MD1=L enters the serial write mode. When attaching a pull-up or pull-down resistor, avoid long wiring.
X0, X1	Oscillation pin	See the "Data Sheet" for the source oscillation clock (main clock) frequencies that can be used in serial write mode. (Restrictions apply to clock asynchronous communication. For details, see Table 1-2.)
P22/SOT0_0	UART serial data output pin/ USB source oscillating frequency select pin	When the communication mode is set to UART, this pin becomes a serial data output pin when communication begins after the serial write mode is activated. When the communication mode is set to USB, this pin controls the frequency for source oscillation clock. P22=L : source oscillation frequency : 4MHz P22=H : source oscillation frequency: 48MHz
P21/SIN0_0	Clock synchronous/ asynchronous select pin/UART serial data input pin	Setting the input level of this pin to "H" until the start of communication enables the clock asynchronous communication mode, and setting it to "L" enables the clock synchronous communication mode. When the communication mode is set to UART, this pin can be used as a serial data input pin when communication begins after the serial write mode is activated.
P60	Communication mode select pin	The communication mode is determined by the input level of this pin at reset to shift to the serial write mode. Setting this pin to "H" enables the USB communication mode, and setting it to "L" enables the UART communication mode.
P61/UHCONX	Pull-up control pin for UDP0	This pin controls the pull-up of USB side (D+) when the communication mode is USB. UHCONX=L: Connect the pull-up resistor UHCONX=H: Disconnect the pull-up resistor
UDP0	USB I/O pin	This pin becomes an input/output pin of USB side (D+) when the communication mode is set to USB.
UDM0	USB I/O pin	This pin becomes an input/output pin of USB side (D-) when the communication mode is set to USB.
INITX	Reset pin	-
VCC	Power supply pin	For writing, supply power to the microcontroller from the user system.
USBVCC	Power supply pin for USB I/O	-
VSS	GND pin	-

MN709-00005-2v0-E

FUJITSU SEMICONDUCTOR • CONTROLLER MANUAL

32-BIT MICROCONTROLLER

FM4 Family

MB9B560R/460R/360R/160R Series

FLASH PROGRAMMING MANUAL

October 2013 Rev. 2.0

Published **Spansion Inc.**

Edited Marketing Communications Dept.