# FM4 Family

## 32-BIT MICROCONTROLLER
## MB9B560R series
## DATA SHEET

***Errata Sheet***

<table>
<tr><th>Page</th><th>Item</th><th>Description</th></tr>
<tr><td colspan="3">Original document code: DS709-00001-1v0-E</td></tr>
<tr><td colspan="3">Rev 1.0 January 9, 2014</td></tr>
<tr><td>74</td><td>ELECTRICAL CHARACTERISTICS<br><br>2.Recommended Operating Conditions</td><td>It should be corrected as indicated by the shading below.<br><br>
<table>
<tr><th rowspan="2">Parameter</th><th rowspan="2">Symbol</th><th rowspan="2">Conditions</th><th colspan="2">Value</th><th rowspan="2">Unit</th><th rowspan="2">Remarks</th></tr>
<tr><th>Min</th><th>Max</th></tr>
<tr><td>Power supply voltage</td><td>VCC</td><td>-</td><td>2.7</td><td>5.5</td><td>V</td><td></td></tr>
<tr><td>Analog reference voltage</td><td>AVRH</td><td>-</td><td>*4</td><td>$AV_{CC}$</td><td>V</td><td></td></tr>
</table>
*4 :The minimum value of Analog reference voltage depends on the value of compare clock cycle (Tcck). See "5. 12-bit A/D Converter" for the details.<br><br>See the description of the same item on Rev. 2.0 (P.3).</td></tr>
<tr><td>146</td><td>ELECTRICAL CHARACTERISTICS<br><br>5. 12-bit A/D Converter</td><td>“Electrical Characteristics for the A/D Converter” should be corrected as indicated by the shading below.<br><br>(Error)<br><br>
<table>
<tr><th rowspan="2">Parameter</th><th rowspan="2">Symbol</th><th rowspan="2">Pin name</th><th colspan="3">Value</th><th rowspan="2">Unit</th><th rowspan="2">Remarks</th></tr>
<tr><th>Min</th><th>Typ</th><th>Max</th></tr>
<tr><td>Reference voltage</td><td>-</td><td>AVRH</td><td>2.7</td><td>-</td><td>$AV_{CC}$</td><td>V</td><td></td></tr>
</table>
(Correct)<br><br>
<table>
<tr><th rowspan="2">Parameter</th><th rowspan="2">Symbol</th><th rowspan="2">Pin name</th><th colspan="3">Value</th><th rowspan="2">Unit</th><th rowspan="2">Remarks</th></tr>
<tr><th>Min</th><th>Typ</th><th>Max</th></tr>
<tr><td rowspan="2">Reference voltage</td><td rowspan="2">-</td><td rowspan="2">AVRH</td><td>4.5</td><td>-</td><td>$AV_{CC}$</td><td rowspan="2">V</td><td>Tcck < 50ns</td></tr>
<tr><td>2.7</td><td>-</td><td>$AV_{CC}$</td><td>Tcck ≥ 50ns</td></tr>
</table></td></tr>
<tr><td colspan="3">Rev 2.0 April 25, 2014</td></tr>
<tr><td>2</td><td>FEATURES</td><td>“●32-bit ARM Cortex-M4F Core “should be corrected as indicated by the shading below.<br><br>(Error)<br>・Processor version: r2p1<br><br>(Correct)<br>・Processor version: r0p1</td></tr>
</table>

<table>
<tr><th>Page</th><th>Item</th><th>Description</th></tr>
<tr><td>49</td><td>I/O CIRCUIT TYPE</td><td>It should be added as indicated by the shading below.
<table>
<tr><th>Type</th><th>Circuit</th><th>Remarks</th></tr>
<tr><td>I</td><td>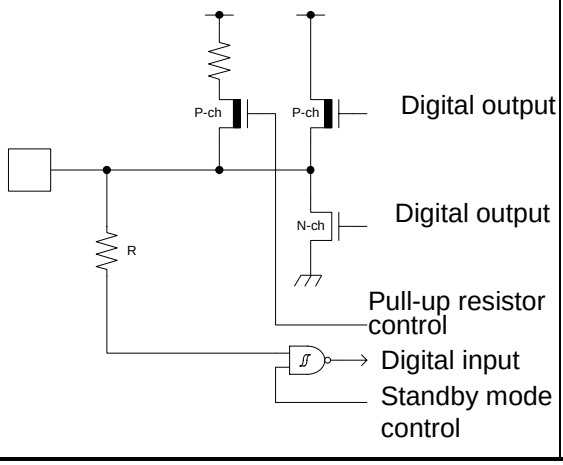
</td><td>・CMOS level output<br>・CMOS level hysteresis input<br>・5V tolerant<br>・With standby mode control<br>・Pull-up resistor<br>: Approximately 50kΩ<br>・$I_{OH}$ = -4mA, $I_{OL}$ = 4mA<br>・Available to control of PZR registers.</td></tr>
</table></td></tr>
<tr><td>71</td><td>Pin Status</td><td>“List of VBAT Domain Pin Status” should be corrected as indicated by the shading below.<br><br>(Error)
<table>
<tr><th rowspan="3">VBAT pin status type</th><th rowspan="3">Function group</th><th>INITX input state</th><th>Device internal reset state</th><th colspan="2">TIMER mode, RTC mode, or STOP mode state</th><th colspan="2">Deep standby RTC mode or Deep standby STOP mode state</th><th>Return from Deep standby mode state</th></tr>
<tr><td colspan="2">Power supply stable</td><td colspan="2">Power supply stable</td><td colspan="2">Power supply stable</td><td>Power supply stable</td></tr>
<tr><td>INITX=0</td><td>INITX=1</td><td colspan="2">INITX=1</td><td colspan="2">INITX=1</td><td>INITX=1</td></tr>
<tr><td>-</td><td>-</td><td>SPL=0</td><td>SPL=1</td><td>SPL=0</td><td>SPL=1</td><td>-</td></tr>
<tr><td>S</td><td>GPIO selected</td><td>Setting disabled</td><td>Setting disabled</td><td>Maintain previous state</td><td>Hi-Z / Internal input fixed at "0"</td><td>GPIO selected Internal input fixed at "0"</td><td>Hi-Z / Internal input fixed at "0"</td><td>GPIO selected</td></tr>
<tr><td rowspan="3">T</td><td>GPIO selected</td><td>Setting disabled</td><td>Setting disabled</td><td>Maintain previous state</td><td>Hi-Z / Internal input fixed at "0"</td><td>GPIO selected Internal input fixed at "0"</td><td>Hi-Z / Internal input fixed at "0"</td><td>GPIO selected</td></tr>
<tr><td>External sub clock input selected</td><td>Setting disabled</td><td>Setting disabled</td><td>Maintain previous state</td><td>Hi-Z / Internal input fixed at "0"</td><td>Maintain previous state</td><td>Hi-Z / Internal input fixed at "0"</td><td>Maintain previous state</td></tr>
<tr><td>Sub crystal oscillator output pin</td><td>Hi-Z / Internal input fixed at "0"</td><td>Hi-Z / Internal input fixed at "0"</td><td>Maintain previous state/When oscillation stops*, Hi-Z / Internal input fixed at "0"</td><td>Maintain previous state/When oscillation stops*, Hi-Z / Internal input fixed at "0"</td><td>Maintain previous state/When oscillation stops*, Hi-Z/ Internal input fixed at "0"</td><td>Maintain previous state/When oscillation stops*, Hi-Z/ Internal input fixed at "0"</td><td>Maintain previous state/When oscillation stops*, Hi-Z/ Internal input fixed at "0"</td></tr>
</table>
*Oscillation is stopped at STOP mode and Deep standby STOP mode.</td></tr>
</table>

<table>
<tr><th>Page</th><th>Item</th><th>Description</th></tr>
<tr><td>71</td><td>Pin Status</td><td>(Correct)
<table>
<tr><th rowspan="5">VBAT pin status type</th><th rowspan="5">Function group</th><th rowspan="2">INITX input state</th><th rowspan="2">Device internal reset state</th><th colspan="2" rowspan="2">TIMER mode, RTC mode, or STOP mode state</th><th colspan="2" rowspan="2">Deep standby RTC mode or Deep standby STOP mode state</th><th rowspan="2">Return from Deep standby mode state</th></tr>
<tr></tr>
<tr><td colspan="2">Power supply stable</td><td colspan="2">Power supply stable</td><td colspan="2">Power supply stable</td><td>Power supply stable</td></tr>
<tr><td>INITX=0</td><td>INITX=1</td><td colspan="2">INITX=1</td><td colspan="2">INITX=1</td><td>INITX=1</td></tr>
<tr><td>-</td><td>-</td><td>SPL=0</td><td>SPL=1</td><td>SPL=0</td><td>SPL=1</td><td>-</td></tr>
<tr><td>S</td><td>GPIO selected</td><td>Maintain previous state</td><td>Maintain previous state</td><td>Maintain previous state</td><td>Maintain previous state</td><td>Maintain previous state</td><td>Maintain previous state</td><td>Maintain previous state</td></tr>
<tr><td rowspan="3">T</td><td>GPIO selected</td><td>Maintain previous state</td><td>Maintain previous state</td><td>Maintain previous state</td><td>Maintain previous state</td><td>Maintain previous state</td><td>Maintain previous state</td><td>Maintain previous state</td></tr>
<tr><td>External sub clock input selected</td><td>Maintain previous state</td><td>Maintain previous state</td><td>Maintain previous state</td><td>Maintain previous state</td><td>Maintain previous state</td><td>Maintain previous state</td><td>Maintain previous state</td></tr>
<tr><td>Sub crystal oscillator output pin</td><td>Maintain previous state</td><td>Maintain previous state</td><td>Maintain previous state/When oscillation stops, Hi-Z*</td><td>Maintain previous state/When oscillation stops, Hi-Z*</td><td>Maintain previous state/When oscillation stops, Hi-Z*</td><td>Maintain previous state/When oscillation stops, Hi-Z*</td><td>Maintain previous state</td></tr>
</table>
*When The SOSCNTL bit in the WTOSCCNT Register is “0”, Sub crystal oscillator output pin is maintain previous state.<br>When The SOSCNTL bit in the WTOSCCNT Register is “1”, Oscillation is stopped at STOP mode and Deep standby STOP mode.</td></tr>
<tr><td>74</td><td>ELECTRICAL CHARACTERISTICS<br><br>2.Recommended Operating Conditions</td><td>It should be corrected as indicated by the shading below.
<table>
<tr><th rowspan="2">Parameter</th><th rowspan="2">Symbol</th><th rowspan="2">Conditions</th><th colspan="2">Value</th><th rowspan="2">Unit</th><th rowspan="2">Remarks</th></tr>
<tr><th>Min</th><th>Max</th></tr>
<tr><td>Power supply voltage</td><td>VCC</td><td>-</td><td>2.7*5</td><td>5.5</td><td>V</td><td></td></tr>
<tr><td>Analog reference voltage</td><td>AVRH</td><td>-</td><td>*4</td><td>$AV_{CC}$</td><td>V</td><td></td></tr>
</table>
*4 :The minimum value of Analog reference voltage depends on the value of compare clock cycle (Tcck). See "5. 12-bit A/D Converter" for the details.<br>*5 : In between less than the minimum power supply voltage and low voltage reset/interrupt detection voltage or more, instruction execution and low voltage detection function by built-in High-speed CR(including Main PLL is used) or built-in Low-speed CR is possible to operate only.</td></tr>
</table>

<table>
<tr><th>Page</th><th>Item</th><th>Description</th></tr>
<tr><td>87</td><td>ELECTRICAL CHARACTERISTICS<br><br>4. AC Characteristics</td><td>“(3) Built-in CR Oscillation Characteristics” should be corrected as indicated by the shading below.<br><br>・ Built-in High-speed CR<br><br>(VCC = 2.7V ~ 5.5V, VSS = 0V)
<table>
<tr><th rowspan="2">Parameter</th><th rowspan="2">Symbol</th><th rowspan="2">Conditions</th><th colspan="3">Value</th><th rowspan="2">Unit</th><th rowspan="2">Remarks</th></tr>
<tr><th>Min</th><th>Typ</th><th>Max</th></tr>
<tr><td rowspan="2">Clock frequency</td><td rowspan="2">$F_{CRH}$</td><td>Tj = -20°C to + 105°C</td><td>3.92</td><td>4</td><td>4.08</td><td rowspan="3">MHz</td><td>When trimming*1</td></tr>
<tr><td>Tj = - 40°C to + 125°C</td><td>3.88</td><td>4</td><td>4.12</td><td rowspan="2">When not trimming</td></tr>
<tr><td>Clock frequency</td><td>$F_{CRH}$</td><td>Tj = - 40°C to + 125°C</td><td>3</td><td>4</td><td>5</td></tr>
<tr><td>Frequency stabilization time</td><td>$t_{CRWT}$</td><td>-</td><td>-</td><td>-</td><td>30</td><td>µS</td><td>*2</td></tr>
</table>
*1: In the case of using the values in CR trimming area of Flash memory at shipment for frequency/temperature trimming.<br>*2: This is the time to stabilize the frequency of high-speed CR clock after setting trimming value. This period is able to use high-speed CR clock as source clock.</td></tr>
<tr><td>149</td><td>ELECTRICAL CHARACTERISTICS<br><br>6. 12-bit D/A Converter</td><td>“Electrical Characteristics for the A/D Converter” should be added as indicated by the shading below.<br><br>(VCC = AVCC = 2.7Vto5.5V, VSS = AVSS = 0V)
<table>
<tr><th rowspan="2">Parameter</th><th rowspan="2">Symbol</th><th rowspan="2">Pin name</th><th colspan="3">Value</th><th rowspan="2">Unit</th><th rowspan="2">Remarks</th></tr>
<tr><th>Min</th><th>Typ</th><th>Max</th></tr>
<tr><td>Resolution</td><td>-</td><td rowspan="8">DAx</td><td>-</td><td>-</td><td>12</td><td>bit</td><td></td></tr>
<tr><td rowspan="2">Conversion time</td><td>tc20</td><td>0.56</td><td>0.69</td><td>0.81</td><td>µs</td><td>Load 20pF</td></tr>
<tr><td>tc100</td><td>2.79</td><td>3.42</td><td>4.06</td><td>µs</td><td>Load 100pF</td></tr>
<tr><td>Integral Nonlinearity*</td><td>INL</td><td>- 16</td><td>-</td><td>+ 16</td><td>LSB</td><td></td></tr>
<tr><td>Differential Nonlinearity*</td><td>DNL</td><td>- 0.98</td><td>-</td><td>+ 1.5</td><td>LSB</td><td></td></tr>
<tr><td rowspan="2">Output voltage offset</td><td rowspan="2">$V_{OFF}$</td><td>-</td><td>-</td><td>10.0</td><td>mV</td><td>When setting 0x000</td></tr>
<tr><td>- 20.0</td><td>-</td><td>+ 1.4</td><td>mV</td><td>When setting 0xFFF</td></tr>
<tr><td rowspan="2">Analog output impedance</td><td rowspan="2">$R_O$</td><td>3.10</td><td>3.80</td><td>4.50</td><td>kΩ</td><td>D/A operation</td></tr>
<tr><td>2.0</td><td>-</td><td>-</td><td>MΩ</td><td>When D/A stop</td></tr>
<tr><td rowspan="3">Power supply current*</td><td rowspan="2">IDDA</td><td rowspan="3">AVCC</td><td>260</td><td>330</td><td>410</td><td>µA</td><td>D/A operation $AV_{CC}$=3.3V</td></tr>
<tr><td>400</td><td>510</td><td>620</td><td>µA</td><td>D/A operation $AV_{CC}$=5.0V</td></tr>
<tr><td>IDSA</td><td>-</td><td>-</td><td>14</td><td>µA</td><td>When D/A stop</td></tr>
</table>
*: During no load</td></tr>
</table>

| Page | Item | Description |
|---|---|---|
| 156 | ELECTRICAL CHARACTERISTICS<br><br>11. Standby Recovery Time | "Recovery count time" of "(1) Recovery cause: Interrupt/WKUP" should be corrected as indicated by the shading below.<br><br>(Error)<br><br>(Correct) |

(Error)

| Parameter | Symbol | Value | | Unit | Remarks |
|---|---|---|---|---|---|
| | | Min | Max | | |
| Sub timer mode | Ticnt | 881 | 1136 | µs | |
| RTC mode Stop mode (High-speed CR /Main/PLL run mode return) | | 270 | 581 | µs | |
| RTC mode Stop mode (Low-speed CR/sub run mode return) | | 240 | 480 | µs | |
| Deep standby RTC mode with RAM retention | | 308 | 667 | µs | without RAM retention |
| Deep standby stop mode with RAM retention | | 308 | 667 | µs | with RAM retention |

(Correct)

| Parameter | Symbol | Value | | Unit | Remarks |
|---|---|---|---|---|---|
| | | Min | Max | | |
| Sub timer mode | Ticnt | 896 | 1136 | µs | |
| RTC mode Stop mode (High-speed CR /Main/PLL run mode return) | | 316 | 581 | µs | |
| RTC mode Stop mode (Low-speed CR/sub run mode return) | | 270 | 540 | µs | |
| Deep standby RTC mode with RAM retention | | 365 | 667 | µs | without RAM retention |
| Deep standby stop mode with RAM retention | | 365 | 667 | µs | with RAM retention |

<table>
<tr><th>Page</th><th>Item</th><th>Description</th></tr>
<tr><td>158</td><td>ELECTRICAL CHARACTERISTICS<br><br>11. Standby Recovery Time</td><td>
“Recovery count time” of “(2) Recovery cause: Reset” should be corrected as indicated by the shading below.<br><br>
(Error)
<table>
<tr><th rowspan="2">Parameter</th><th rowspan="2">Symbol</th><th colspan="2">Value</th><th rowspan="2">Unit</th><th rowspan="2">Remarks</th></tr>
<tr><th>Min</th><th>Max</th></tr>
<tr><td>Sleep mode</td><td rowspan="8">Trcnt</td><td>111</td><td>267</td><td>µs</td><td></td></tr>
<tr><td>High-speed CR Timer mode<br>Main Timer mode<br>PLL Timer mode</td><td>111</td><td>267</td><td>µs</td><td></td></tr>
<tr><td>Low-speed CR timer mode</td><td>258</td><td>569</td><td>µs</td><td></td></tr>
<tr><td>Sub timer mode</td><td>258</td><td>569</td><td>µs</td><td></td></tr>
<tr><td>RTC mode<br>Stop mode</td><td>258</td><td>569</td><td>µs</td><td></td></tr>
<tr><td rowspan="2">Deep standby RTC mode with RAM retention<br>Deep standby stop mode with RAM retention</td><td rowspan="2">308</td><td rowspan="2">669</td><td>µs</td><td>without RAM retention</td></tr>
<tr><td>µs</td><td>with RAM retention</td></tr>
</table>
<br>
(Correct)
<table>
<tr><th rowspan="2">Parameter</th><th rowspan="2">Symbol</th><th colspan="2">Value</th><th rowspan="2">Unit</th><th rowspan="2">Remarks</th></tr>
<tr><th>Min</th><th>Max</th></tr>
<tr><td>Sleep mode</td><td rowspan="8">Trcnt</td><td>155</td><td>266</td><td>µs</td><td></td></tr>
<tr><td>High-speed CR Timer mode<br>Main Timer mode<br>PLL Timer mode</td><td>155</td><td>266</td><td>µs</td><td></td></tr>
<tr><td>Low-speed CR timer mode</td><td>315</td><td>567</td><td>µs</td><td></td></tr>
<tr><td>Sub timer mode</td><td>315</td><td>567</td><td>µs</td><td></td></tr>
<tr><td>RTC mode<br>Stop mode</td><td>315</td><td>567</td><td>µs</td><td></td></tr>
<tr><td rowspan="2">Deep standby RTC mode with RAM retention<br>Deep standby stop mode with RAM retention</td><td rowspan="2">336</td><td rowspan="2">667</td><td>µs</td><td>without RAM retention</td></tr>
<tr><td>µs</td><td>with RAM retention</td></tr>
</table>
</td></tr>
</table>