Reference Multiplexer Datasheet RefMux V 1.3

Copyright © 2003-2012 Cypress Semiconductor Corporation. All Rights Reserved.

Resources	PSoC® Blocks			API Memory (Bytes)		Pins
	Digital	Analog CT	Analog SC	Flash	RAM	
CY8C29/27/24/22xxx, CY8C23x33, CY8CLED02/04/08/16, CY8CLED0xD, CY8CLED0xG, CY8CTST120, CY8CTMG120, CY8CTMA120, CY8CTST300, CY8CTMA300, CY8C28x45, CY8CPLC20, CY8CLED16P01, CY8C28x43						
		1		32	0	1 if Analog Output Buffer is Enabled

For one or more fully configured, functional example projects that use this user module go to www.cypress.com/psocexampleprojects.

Features and Overview

- Low voltage offset path from PMux to analog output bus
- Provides a method to route internal references (AGND, REFHI, REFLO) to an external pin
- Provides a 4 to 1 analog mux for switch capacitor blocks such as ADCs and filters, if used with the AMux4 User Module
- Signals from PMux through test mux may be rail-to-rail
- Provides a method to route external analog inputs directly to the analog output bus

The RefMux User Module switches one of three internal references (AGND, REFLO, or REFHI) to the analog output bus. Additionally, the output of the Continuous Time (CT) block PMux multiplexer can be selected. The RefMux User Module makes use of the TestMux in a CT block. These signals may be routed to a switch capacitor block on the bottom analog row or buffered and routed to an external pin. If used in conjunction with the AMux4 User Module, they form a four input analog multiplexer to route signals from one of four pins to the analog output bus.

Figure 1. RefMux Block Diagram

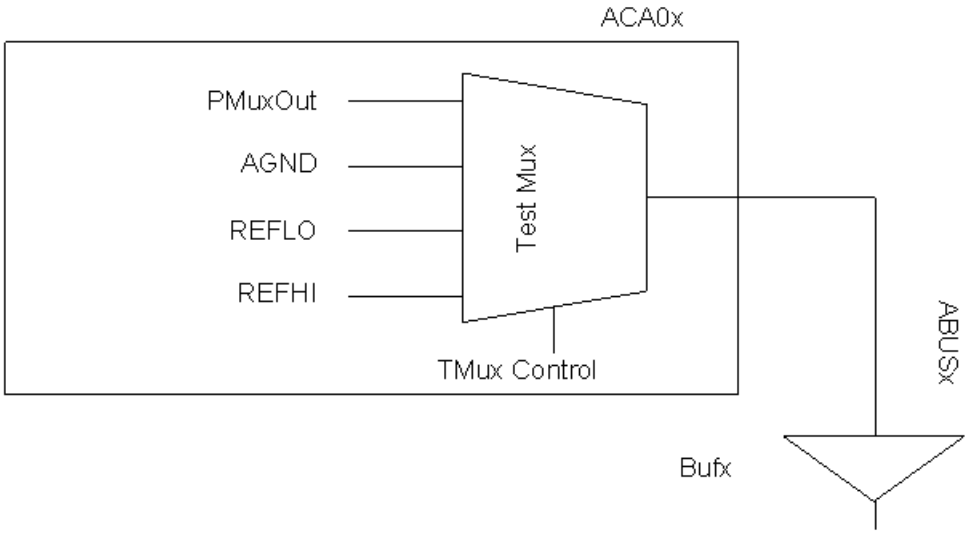

Functional Description

The RefMux User Module uses and provides an API to control the Test Mux (TMux) in a CT block. The TMux provides a path to route AGND, REFLO, REFHI, or the PMux output onto the analog output bus (ABUSx). The PMux is set by default to route the signal from the AInMux_x to its output. These signals can be connected to the input of the switch capacitor blocks on the bottom row, or output to an external pin by way of the analog output buffer. This user module consumes one CT block, even though it does not utilize the functionality of the CT circuitry (see the figure below). Power only has to be applied to the RefMux User Module if the AGND signal is selected.

Figure 2. RefMux Functional Diagram

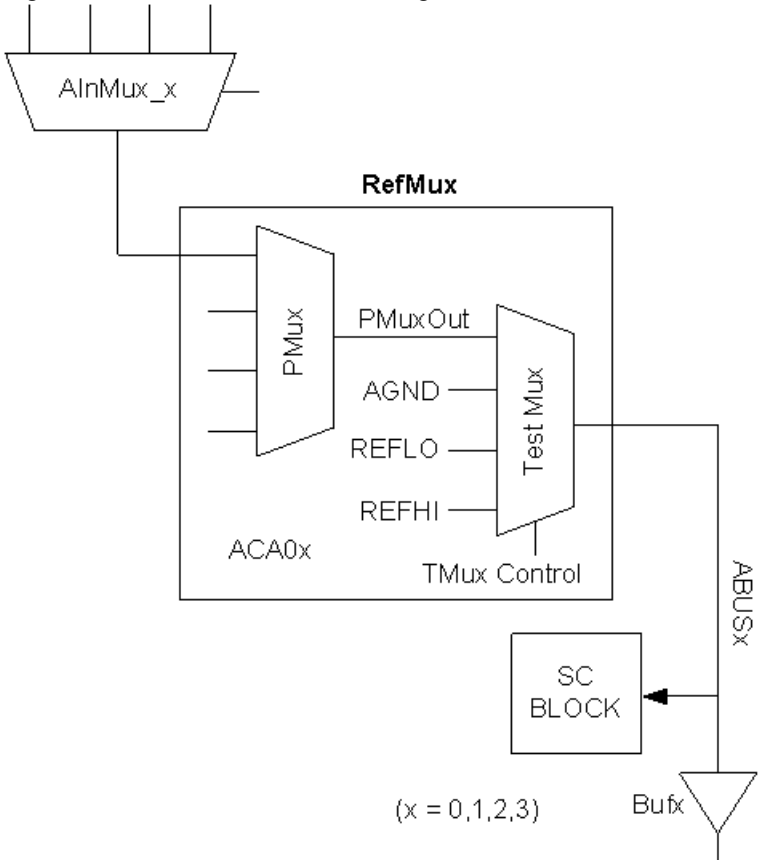

DC and AC Electrical Characteristics

See DC Analog Reference Specifications in the PSoC device family datasheets.

Placement

The RefMux User Module maps freely onto any of the continuous time PSoC blocks in the device. Only the bottom row of analog switch capacitor blocks, except for ASA21 in the CY8C26/25xxx devices, allow connection to the ABUS in that column.

Figure 3. RefMux Placement

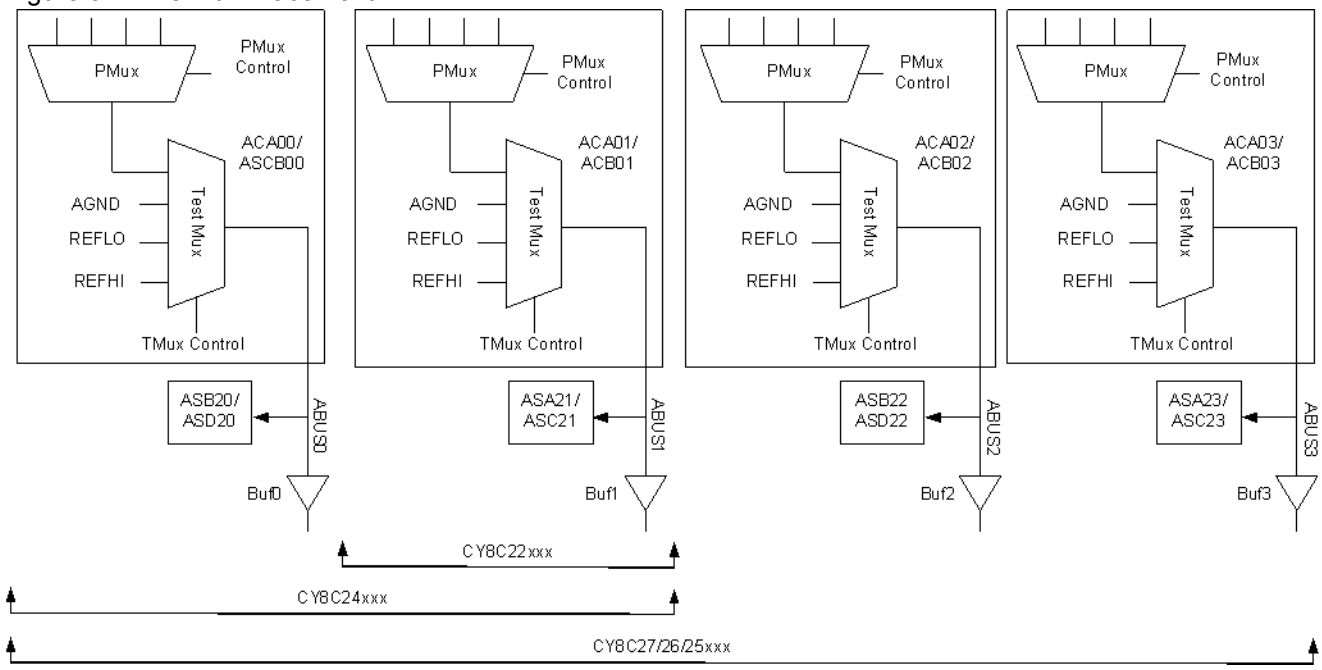

Parameters and Resources

Reference Select

This parameter selects which reference will be connected to the analog output bus. The valid options are OFF, PMuxOut, AGND, REFLO, and REFHI. The power to this module need only be applied if the analog ground AGND option is selected.

AnalogBus

The RefMux block output is always the AnalogBus (ABUSx) for that column. The ABUSx buffer (buf0..3) may be enabled in the Device Editor, to route the output to an external pin.

Application Programming Interface

The Application Programming Interface (API) routines are provided as part of the user module to allow the designer to deal with the module at a higher level. This section specifies the interface to each function together with related constants provided by the “include” files.

Note

In this, as in all user module APIs, the values of the A and X register may be altered by calling an API function. It is the responsibility of the calling function to preserve the values of A and X prior to the call if those values are required after the call. This “registers are volatile” policy was selected for efficiency reasons and has been in force since version 1.0 of PSoC Designer. The C compiler automatically takes care of this requirement. Assembly language programmers must ensure their code observes the policy, too. Though some user module API function may leave A and X unchanged, there is no guarantee they will do so in the future.

For Large Memory Model devices, it is also the caller's responsibility to preserve any value in the CUR_PP, IDX_PP, MVR_PP, and MVW_PP registers. Even though some of these registers may not be modified now, there is no guarantee that will remain the case in future releases.

The following are the API programming routines provided for the RefMux User Module.

RefMux_RefSelect

Description:

Switches selected signal or reference to the Analog Bus (ABUSx).

C Prototype:

```
void  RefMux_RefSelect(BYTE bRef);
```

Assembly:

```
mov   A, RefMux_AGND
lcall  RefMux_RefSelect
```

Parameters:

bRef: This input selects which signal will be connected to the analog output bus. Symbolic names provided in C and assembly, and their associated values, are given in the following table.

Symbolic Name	Value
RefMux_MUXOFF	0x00
RefMux_PMUXOUT	0x10
RefMux_AGND	0x14
RefMux_REFLO	0x18
RefMux_REFHI	0x1C

Return Value:

None

Side Effects:

The A and X registers may be altered by this function.

RefMux_Start

Description:

Sets the power level for the continuous time PSoC block. Power only needs to be supplied when AGND is selected. Selecting REFHI, REFLO, or PMUXOUT does not require power to be supplied.

C Prototype:

```
void  RefMux_Start(BYTE bPower);
```

Assembly:

```
mov   A, RefMux_LOWPOWER
lcall  RefMux_Start
```

Parameters:

bRef: One byte that specifies the power level to the CT block. Following reset and configuration, the PSoC blocks assigned to the RefMux is powered down. Symbolic names provided in C and assembly, and their associated values, are given in the following table.

Symbolic Name	Value
RefMux_OFF	0x00
RefMux_LOWPOWER	0x01
RefMux_MEDPOWER	0x02
RefMux_HIGHPOWER	0x03

Return Value:

None

Side Effects:

The A and X registers may be altered by this function.

RefMux_SetPower

Description:

Sets the power level for the continuous time PSoC block. Power only needs to be supplied when AGND is selected. Selecting REFHI, REFLO, or PMUXOUT does not require power to be supplied.

C Prototype:

```
void  RefMux_SetPower(BYTE bPower);
```

Assembly:

```
mov   A, RefMux_LOWPOWER
lcall  RefMux_SetPower
```

Parameters:

bRef: One byte that specifies the power level to the CT block. Following reset and configuration, the PSoC blocks assigned to the RefMux is powered down. Symbolic names provided in C and assembly, and their associated values, are given in the following table.

Symbolic Name	Value
RefMux_OFF	0x00
RefMux_LOWPOWER	0x01
RefMux_MEDPOWER	0x02
RefMux_HIGHPOWER	0x03

Return Value:

None

Side Effects:

The A and X registers may be altered by this function.

RefMux_Stop

Description:

Powers the user module off.

C Prototype:

```
void  RefMux_Stop(void);
```

Assembly:

```
lcall  RefMux_Stop
```

Parameters:

None

Return Value:

None

Side Effects:

The A and X registers may be altered by this function.

Sample Firmware Source Code

The following is a simple assembly and C example for printing a string on the RefMux.

```
;;-------------------------------------------------------------------
;; Sample Code for the RefMux User Module.
;; In this example, the RefMux User Module is placed at location ACA02,
;; column 2.
;;-------------------------------------------------------------------

export _main

include "m8c.inc"
include "RefMux.inc"

_main:


mov   A, RefMux_LOWPOWER    ; Turn on power to CT block
call  RefMux_Start
mov   A, RefMux_AGND        ; specify Analog GND
call  RefMux_RefSelect      ; connect it to the analog bus (ABUS2)

;…Other code
ret


A sample project written in C is:
//-------------------------------------------------------------------
// Sample Code for the RefMux User Module.
// In this example, the RefMux User Module is placed at location ACA02,
```

```
// column 2.
//-------------------------------------------------------------------


#include "m8c.h"
#include "RefMux.h"

void main(void)
{
    BYTE bRefSignal;

    RefMux_Start(RefMux_LOWPOWER);     // Turn on power to CT block
    bRefSignal = RefMux_AGND;          // Assign port number
    RefMux_RefSelect(bRefSignal);      // Apply AGND to ABUS2.


 // …Other code
}
```

Configuration Registers

These registers are configured by the initialization and API library. The user does not have to change or read these registers directly. This section is supplied as a reference.

Table 1. Block RefMux, Register: CR0

Bit	7	6	5	4	3	2	1	0
Value	0	0	0	0	0	0	0	0

Table 2. Block RefMux, Register: CR1

Bit	7	6	5	4	3	2	1	0
Value	0	0	0	0	0	0	0	0

Table 3. Block RefMux, Register: CR2

Bit	7	6	5	4	3	2	1	0
Value	0	0	0	TestMux2	TestMux1	TestMux0	Power1	Power0

TestMux[2:0] control bits for TMux are as follows.

100 = PMux Output 101 = AGND 110 = REFLO 111 = REFHI 0xx = All paths off

Power[1:0] control bits for CT block Power setting are as follows.

00 = Off 01 = Low (60 uA) 10 = Med (150 uA) 11 = High (500 uA)

Version History

Version	Originator	Description
1.3	DHA	Added Version History

Note PSoC Designer 5.1 introduces a Version History in all user module datasheets. This section documents high level descriptions of the differences between the current and previous user module versions.

Copyright © 2003-2012 Cypress Semiconductor Corporation. The information contained herein is subject to change without notice. Cypress Semiconductor Corporation assumes no responsibility for the use of any circuitry other than circuitry embodied in a Cypress product. Nor does it convey or imply any license under patent or other rights. Cypress products are not warranted nor intended to be used for medical, life support, life saving, critical control or safety applications, unless pursuant to an express written agreement with Cypress. Furthermore, Cypress does not authorize its products for use as critical components in life-support systems where a malfunction or failure may reasonably be expected to result in significant injury to the user. The inclusion of Cypress products in life-support systems application implies that the manufacturer assumes all risk of such use and in doing so indemnifies Cypress against all charges.

PSoC Designer™ and Programmable System-on-Chip™ are trademarks and PSoC® is a registered trademark of Cypress Semiconductor Corp. All other trademarks or registered trademarks referenced herein are property of the respective corporations.

Any Source Code (software and/or firmware) is owned by Cypress Semiconductor Corporation (Cypress) and is protected by and subject to worldwide patent protection (United States and foreign), United States copyright laws and international treaty provisions. Cypress hereby grants to licensee a personal, non-exclusive, non-transferable license to copy, use, modify, create derivative works of, and compile the Cypress Source Code and derivative works for the sole purpose of creating custom software and or firmware in support of licensee product to be used only in conjunction with a Cypress integrated circuit as specified in the applicable agreement. Any reproduction, modification, translation, compilation, or representation of this Source Code except as specified above is prohibited without the express written permission of Cypress.

Disclaimer: CYPRESS MAKES NO WARRANTY OF ANY KIND, EXPRESS OR IMPLIED, WITH REGARD TO THIS MATERIAL, INCLUDING, BUT NOT LIMITED TO, THE IMPLIED WARRANTIES OF MERCHANTABILITY AND FITNESS FOR A PARTICULAR PURPOSE. Cypress reserves the right to make changes without further notice to the materials described herein. Cypress does not assume any liability arising out of the application or use of any product or circuit described herein. Cypress does not authorize its products for use as critical components in life-support systems where a malfunction or failure may reasonably be expected to result in significant injury to the user. The inclusion of Cypress' product in a life-support systems application implies that the manufacturer assumes all risk of such use and in doing so indemnifies Cypress against all charges.

Use may be limited by and subject to the applicable Cypress software license agreement.